B. Format: Submit record Product Data as paper copy.

1. Include record Product Data directory organized by Specification Section number and title, electronically linked to each item of record Product Data.

2.4 MISCELLANEOUS RECORD SUBMITTALS

A. Assemble miscellaneous records required by other Specification Sections for miscellaneous record keeping and submittal in connection with actual performance of the Work. Bind or file miscellaneous records and identify each, ready for continued use and reference.

B. Format: Submit miscellaneous record submittals as paper copy.

1. Include miscellaneous record submittals directory organized by Specification Section number and title, electronically linked to each item of miscellaneous record submittals.

PART 3 - EXECUTION

3.1 RECORDING AND MAINTENANCE

A. Recording: Maintain one copy of each submittal during the construction period for project record document purposes. Post changes and revisions to project record documents as they occur; do not wait until end of Project.

B. Maintenance of Record Documents and Samples: Store record documents and Samples in the field office apart from the Contract Documents used for construction. Do not use project record documents for construction purposes. Maintain record documents in good order and in a clean, dry, legible condition, protected from deterioration and loss. Provide access to project record documents for Engineer's reference during normal working hours.

END OF SECTION 017810

SECTION 115000 – DUPLEX PACKAGE GRINDER PUMP STATION

PART 1 - GENERAL PUMP STATION No. 2

1.1 GENERAL REQUIREMENTS

A. The **MANUFACTURER** shall furnish complete factory-built and tested grinder pump unit(s), each consisting of a grinder pump core suitably mounted on an integral stand of stainless steel, tank, electrical quick disconnect (NEMA 6P), pump removal harness, discharge assembly/shut-off valve, anti-siphon valve/check valve assembly, electrical alarm assembly and all necessary internal wiring and controls. For ease of serviceability, all pump motor/grinder units shall be of like type and horsepower throughout the system.

B. The general provisions of the contract, including the General and Supplementary Conditions and General Requirements (if any) apply to the work specified in this section.

1.2 SYSTEM DESCRIPTION

A. The contractor shall furnish and install pre-engineered, factory-built, automatically controlled packaged grinder pumping station(s) with submersible pumps capable of handling raw unscreened sewage, sludge, and similar domestic liquids. Pump stations shall be installed in the locations shown on the Plans, and as specified herein.

B. The factory-built pump station design, materials of construction, pumps, valves and piping, and motor/electrical controls shall be manufactured and provided in strict accordance with the requirements as listed under PART 2 - PRODUCTS of this specification section

C. Pumping station(s) provided for this project shall be W-Series Duplex Wetwell Grinder Pump Station with wired level sensor factory-built systems, as offered by E One Sewer Systems. Alternate equipment will be considered only when pre-submitted in accordance with the requirements of these Specifications. After-the-fact substitutions will not be considered without prior approval.

1.3 DESCRIPTION OF WORK REQUIRED

A. The extent of work required and requirements for the wastewater pumping station for this project are shown on the project drawings and described herein.

B. The work required at each wastewater pump station shall include, but is not limited to, the following:

1. Site grading, erosion control, and weed control as shown on the Plans.
2. Installation of one factory-built prefabricated wastewater pumping station as specified herein.

3. Piping required for each pump station, including all factory-furnished and installed piping, valves, fittings, base elbow, submersible pumps, contractor-furnished piping and valves, and force main piping as specified herein, or as shown on the Plans.
4. Electrical work required for each pump station: main electrical service with utility meter and disconnect, station lighting as may be shown on the Plans, installation of an alarm light at each station, and all necessary conduit and wiring that may be required to provide power for proper installation and operation.
5. Finish work as required to complete the installation of the pump station: finish grading, erosion control, weed control, sod and/or grass seed, shrubbery, other landscaping indicated on the Plans.

C. The Contractor shall furnish and install, as shown on the Plans and specified herein, one factory-built automatic duplex grinder pump station. The station provided for this project shall comply with the detailed descriptions that follow.

1. The principal items of equipment to be provided with each pump station shall include two submersible centrifugal solids-handling pumps, each provided with a compatible Quick Discharge Connector system, guide rails, anchor bolts, stainless steel lifting chain with intermediate links and all associated hardware, a steel reinforced polymer concrete station top slab with integral aluminum wet well access cover, station valves, internal piping of the sizes indicated herein or on the Plans, and a complete factory-built motor control center with circuit breakers, motor starters and automatic liquid level control system as specified herein to constitute a complete, working system.
2. The pumping station provided for this project shall be W-Series Duplex Wetwell Grinder Pump Station with wired level sensor factory-built systems, as offered by E One Sewer Systems. Submersible grinder pumps shall be E One models; with the specific pump size, impeller type and motor HP as indicated elsewhere herein.
3. Alternates proposed for use on this project shall be considered only if full and complete pre-submittal data for all proposed equipment is received no later than fourteen (14) calendar days prior to the bid date. Pre-submittal shall comply with the requirements of Section 1.06 below. The decision of the Engineer regarding the equality of any/all proposed alternates is final, and resubmittal of equipment will not be allowed.

D. Pumps and all mechanical accessories provided for each sewage pump station shall be installed in/on each wet well as indicated on the Plans and as outlined herein.

1. The duplex liquid level control system, valves, piping necessary to provide a complete working system shall be installed inside a heavy duty factory built fiberglass Wetwell.
2. Each complete sewage pump station shall be a regular production item of the submersible pump manufacturer, not a locally assembled compilation of parts and/or components by a third party. The use of conventional station designs which utilize external concrete or fiberglass below-ground valve vaults, bare concrete slab construction or concrete poured inside a fiberglass shell where it may be exposed to condensation of sewage gases (not steel reinforced polymer concrete as specified), or the use of fabricated steel construction is not be considered equivalent to the specified factory-built system, and shall not be furnished.

1.4 PERFORMANCE CRITERIA

A. Each pump shall be designed to handle raw, unscreened domestic sanitary sewage. Pumps shall be furnished with a minimum 1 1/4" discharge connection. Each pump shall be selected to provide the stated capacity and total dynamic head as noted elsewhere herein. Additional performance criteria can be found under the requirements of Section 2.06 B. herein.

B. Site power furnished to pump station shall be 240/1/60VAC 3-wire electrical service, maintained within industry standards. The available fault current provided at the pump station control panel is 10kA RMS symmetrical. Voltage tolerance shall be plus or minus 10 percent. Phase-to-phase unbalance shall not exceed 1% average voltage as set forth in NEMA standard MG-1. Control voltage shall not exceed 240 volts.

C. Manufacturers: Subject to compliance with requirements, provide products by one of the following:
   a. E-One Sewer Systems
   b. Flygt Model 3068.175 Package Duplex Grinder Pump Station
   c. Or Pre-approved equivalent

1.5 SUBMITTALS

A. Product Data

1. Prior to fabrication, the pump station manufacturer shall submit eight copies of submittal data for review and approval. Additional copies will be provided as required to comply with the contractor, supplier, or manufacturer's need for extra returned copies.
2. Submittal shall include shop drawings, electrical ladder logic drawings, and support data as follows: Catalog cuts sheets reflecting characteristics for major items of equipment, materials of construction, major dimensions, motor data, pump characteristic curves to illustrate the design duty point capacity (GPM), head (FT), pump efficiency (n_p), and brake horsepower (BHP). Electrical components used in the motor branch and liquid level control shall be fully described.
3. Shop drawings shall provide layout of mechanical equipment and anchor bolt locations for the Quick Discharge Connector, base elbow, and guide rail components. Pipe penetrations and station access clearances shall be dimensioned relative to the station centerline. Electrical ladder logic drawings shall illustrate motor branch and liquid level control circuits to the extent necessary to validate function and integration of circuits to form a complete working system.

B. Operation & Maintenance Manuals

1. Installation shall be in accordance with written instructions provided by the pump station manufacturer. Comprehensive instructions supplied at time of shipment shall enable personnel to properly install, operate, and maintain all equipment supplied. Content and instructions shall assume operations personnel are familiar with pumps, motors, piping and valves, but lack experience on the exact equipment supplied.
2. Documentation shall be specific to the pump station supplied and collated in functional sections. Each section shall combine to form a complete system manual covering all aspects of equipment supplied by the station manufacturer. Support data for any equipment supplied by others, even if mounted or included in overall station design, shall

be provided by those supplying the equipment and a separate section shall be so designated in the O&M Manual. Instructions shall include the following as a minimum:

a. Functional description of each major component, complete with operating instructions.
b. Instructions for operating pumps and pump controls in all modes of operation.
c. Calibration and adjustment of equipment for initial equipment start-up, replacement of level control components, or as may be required for routine maintenance.
d. Support data for commercially available components not produced by the station manufacturer, but supplied in accordance with the Specifications, shall be supported by literature from the prime manufacturer and incorporated as appendices.
e. Electrical schematic diagram of the pump station circuits shall be in accordance with NFPA70. Schematics shall illustrate, to the extent of authorized repair, pump motor branch, control and alarm system circuits including interconnections. Wire numbers and legend symbols shall be shown. Schematic diagrams for individual components, not normally repairable by the station operator, need not be included. Details for such parts shall not be substituted for an overall system schematic. Partial schematics, block diagrams, and simplified schematics shall not be provided in lieu of an overall system diagram.
f. Mechanical layout drawing of the pump station and components, prepared in accordance with good commercial practice, shall provide installation dimensions and location of all pumps, valves and piping.

3. Operation and maintenance instructions that rely on vendor cut-sheets and literature that includes general configurations, or requires operations personnel to selectively read portions of the manual shall not be acceptable. Operation and maintenance instructions must be specific to equipment supplied in accordance with these Specifications.

1.6 QUALITY ASSURANCE

A. Upon request from the Engineer (or Owner), the pump station manufacturer shall prove financial stability long-term performance and the ability to produce the specified station within the specified delivery schedules. At the request of the Engineer (or Owner) the pump station manufacturer shall provide evidence of the facilities, inventory, equipment and expertise that demonstrates the manufacturer's commitment to long-term customer service and product support. Such evidence shall be demonstrated exclusively by a visit to the pump station manufacturer's facility by the Engineer (or Owner).

B. The manufacturer must show proof of original product design and testing. Products violating intellectual property regulations shall not be allowed, as they may violate international law and expose the user or Engineer to unintended liabilities. “Reverse-engineered” products fabricated to substantially duplicate the design of an original product shall not be allowed, as they may contain substantial differences in tolerances and material applications addressed in the original design, which may contribute to product failure.

C. The manufacturer must show that the basic pump station design configuration and equipment used in the pump station is a standard product and has been factory tested, and shall be

marketed as all components to be supplied having been assembled, operated, and tested to meet the requirements of these Specifications.

D. The term "pump manufacturer" or "pump station manufacturer" shall be defined as the entity which designs, fabricates, machines, assembles, hydraulically tests, and warrants the final product. Any entity that does not meet this definition will not be considered a "pump manufacturer" or "pump station manufacturer" and is not an acceptable supplier. For quality control reasons and to ensure future pump and parts availability, all major components of the pumps provided shall be readily available from the manufacturer's regular inventory in the United States of America.

E. The manufacturer's technical representative shall inspect the completed installation, correct or supervise the correction of any defect or malfunction, and instruct operating personnel in the proper operation and maintenance of the equipment as described in Part 3 – EXECUTION of this specification section

1.7 MANUFACTURER'S EXPERIENCE REQUIREMENTS

A. It is the specific intention of these Specifications that the wastewater pump station provided for this project be provided by a manufacturer with documented experience in the design, production, and successful installation of submersible grinder pumps and factory-built submersible grinder pump stations.

1. The station manufacturer shall have a minimum of twenty (20) calendar years of experience in the production of submersible sewage pumps and related equipment, and shall have the facilities and personnel in place to provide support of the specified factory-built above-ground submersible pumping stations.
2. The pumps, station base, piping assembly, and other related equipment will be a standard production item of the station manufacturer.
3. The pump manufacturer shall maintain adequate levels of inventory to be able to provide replacement parts for pumps, including major components such as impellers, casings, and motors, directly from normal stock. Proof of inventory at the pump station manufacturer's normal place of business may be required prior to approval of any submittal data. Proof of inventory shall be confirmed by a visit to the manufacturer's facility, with the cost of the visit to be borne by the pump station manufacturer. Costs for this trip, if required, shall include transportation, lodging, and all meals for not less than six (6) representatives of the municipality and/or the consulting engineer.

B. No consideration will be given to any equipment manufacturer who cannot comply with <u>all</u> of the requirements stated in Sections 1.05, 1.07, and 1.08.

C. Upon request from the Engineer, the equipment <u>manufacturer</u> shall document the existence of a *<u>factory-authorized</u>* service and repair facility within a reasonable distance of the job site prior to bidding the specified pump station

1.8 MANUFACTURER'S WARRANTY

A. The pump station manufacturer shall warrant all equipment provided to be of quality construction, free of defects in material and workmanship. A written warranty shall include specific details described below:

1. The grinder pump manufacturer shall provide a part(s) and labor warranty on the complete station and accessories, including, but not limited to, the panel for a period of 24 months after notice of owner's acceptance, but no greater than 27 months after receipt of shipment. Any manufacturing defects found during the warranty period will be reported to the manufacturer by the owner and will be corrected by the manufacturer at no cost to the owner.

B. Components that fail to perform as specified by the Engineer, or as represented by the manufacturer, or as proven defective in service during the warranty period, shall be replaced, repaired, or satisfactorily modified by the manufacturer.

C. Equipment supplied by others and incorporated into a pump station or enclosure is not covered by this limited warranty. Any warranty applicable to equipment selected or supplied by others will be limited solely to the warranty, if any, provided by the manufacturer of the equipment.

PART 2 - PRODUCTS

2.1 UNITARY RESPONSIBILITY

A. In order to unify responsibility for proper operation of the complete pump station, it is the intent of these Specifications that all system components are furnished by a single supplier (unitary source). The pumping station must be a standard catalog design, and totally warranted by the manufacturer. Under no circumstances will a pumping system consisting of parts compiled and assembled by a manufacturer's representative, distributor, or other source be considered accepted.

2.2 MANUFACTURER

A. The Specifications and project drawings depict equipment and materials that are manufactured by E One Sewer Systems, which has been deemed the most suitable for the service anticipated. It is not intended to eliminate other products of equal quality and performance (refer to Section 1.04.C.3). However, the contractor shall prepare his bid based on the specified equipment for purposes of determining low bid. Award of a contract shall constitute an obligation to furnish the specified equipment and materials.

B. After execution of the contract, the contractor may offer substitutions to the specified equipment for consideration. The equipment proposed for substitution must be in compliance with Section 1.04.C.3, superior in construction and performance to that specified in the contract, and the higher quality must be demonstrated by a list of current users of the proposed equipment in similar installations.

C. In event the contractor obtains Engineer's approval for equipment substitution, the contractor shall, at his own expense, make all resulting changes to the enclosures, buildings, piping or electrical systems as required to accommodate the proposed equipment. Revised detail drawings illustrating the substituted equipment shall be submitted to the Engineer prior to acceptance.

D. It will be assumed that the contractor's cost for the alternate equipment proposed is less for the proposed substitution, and if approved, the contract price shall be reduced by an amount equal to the savings.

2.3 PUMP DESIGN

A. The pump shall be a custom designed, integral, vertical rotor, motor driven, solids handling pump of the progressing cavity type with a single mechanical seal. Double radial O-ring seals are required at all casting joints to minimize corrosion and create a protective barrier. All pump castings shall be cast iron, fully epoxy coated to 8-10 mil Nominal dry thickness, wet applied. The rotor shall be through-hardened, highly polished, precipitation hardened stainless steel. The stator shall be of a specifically compounded ethylene propylene synthetic elastomer. This material shall be suitable for domestic wastewater service. Its physical properties shall include high tear and abrasion resistance, grease resistance, water and detergent resistance, temperature stability, excellent aging properties, and outstanding wear resistance. Buna-N is not acceptable as a stator material because it does not exhibit the properties as outlined above and required for wastewater service.

B. The grinder shall be placed immediately below the pumping elements and shall be direct-driven by a single, one-piece motor shaft. The grinder impeller (cutter wheel) assembly shall be securely fastened to the pump motor shaft by means of a threaded connection attaching the grinder impeller to the motor shaft. Attachment by means of pins or keys will not be acceptable. The grinder impeller shall be a one-piece, 4140 cutter wheel of the rotating type with inductively hardened cutter teeth. The cutter teeth shall be inductively hardened to Rockwell 50 – 60c for abrasion resistance. The shredder ring shall be of the stationary type and the material shall be white cast iron. The teeth shall be ground into the material to achieve effective grinding. The shredder ring shall have a staggered tooth pattern with only one edge engaged at a time, maximizing the cutting torque. These materials have been chosen for their capacity to perform in the intended environment as they are materials with wear and corrosive resistant properties. This assembly shall be dynamically balanced and operate without objectionable noise or vibration over the entire range of recommended operating pressures. The grinder shall be constructed so as to minimize clogging and jamming under all normal operating conditions including starting. Sufficient vortex action shall be created to scour the tank free of deposits or sludge banks which would impair the operation of the pump. These requirements shall be accomplished by the following, in conjunction with the pump:

1. The grinder shall be positioned in such a way that solids are fed in an upward flow direction.
2. The maximum flow rate through the cutting mechanism must not exceed 4 feet per second. This is a critical design element to minimize jamming and as such must be adhered to.
3. The inlet shroud shall have a diameter of no less than 5 inches. Inlet shrouds that are less than 5 inches in diameter will not be accepted due to their inability to maintain the

specified 4 feet per second maximum inlet velocity which by design prevents unnecessary jamming of the cutter mechanism and minimizes blinding of the pump by large objects that block the inlet shroud.

4. The impeller mechanism must rotate at a nominal speed of no greater than 1800 rpm.

C. The grinder shall be capable of reducing all components in normal domestic sewage, including a reasonable amount of "foreign objects," such as paper, wood, plastic, glass, wipes, rubber and the like, to finely-divided particles which will pass freely through the passages of the pump and the 1-1/4" diameter stainless steel discharge piping.

D. As a maximum, the motor shall be a 1 HP, 1725 RPM, 240 Volt 60 Hertz, 1 Phase, capacitor start, ball bearing, air-cooled induction type with Class F installation, low starting current not to exceed 30 amperes and high starting torque of 8.4 foot pounds. The motor shall be press-fit into the casting for better heat transfer and longer winding life. Inherent protection against running overloads or locked rotor conditions for the pump motor shall be provided by the use of an automatic-reset, integral thermal overload protector incorporated into the motor. This motor protector combination shall have been specifically investigated and listed by Underwriters Laboratories, Inc., for the application. Non-capacitor start motors or permanent split capacitor motors will not be accepted because of their reduced starting torque and consequent diminished grinding capability. The wet portion of the motor armature must be 300 Series stainless. To reduce the potential of environmental concerns, the expense of handling and disposing of oil, and the associated maintenance costs, oil-filled motors will not be accepted.

E. The pump/core shall be provided with a mechanical shaft seal to prevent leakage between the motor and pump. The seal shall have a stationary ceramic seat and carbon rotating surface with faces precision lapped and held in position by a stainless steel spring.

F. Thrust clamps, also sized to match the header piping diameter, shall be provided on the underside of the station base slab for each pump riser pipe to eliminate any movement of the piping inside the fiberglass enclosure as a result of hydraulic thrust during operation. A third thrust clamp shall be provided on the topside of the station base to support the piping assembly during production and shipment to the job site. The contractor in accordance with the station manufacturer's recommendations shall install thrust clamps.

2.4 WET WELL

A. The tank shall be a wetwell design consisting of a single wall, laminated fiberglass construction. The resin used shall be of a commercial grade suitable for the environment. The reinforcing material shall be a commercial grade of glass fiber capable of bonding with the selected resin. The inner surface shall have a smooth finish and be free of cracks and crazing. The exterior tank surface shall be relatively smooth with no exposed fiber or sharp projections present.

B. The tank wall and bottom shall be of sufficient thickness and construction to withstand the imposed loading due to saturated soil at the specified burial depth for each available tank height. All station components must function normally when exposed to the external soil and hydrostatic pressures developed at the specified burial depth. The tank bottom shall be reinforced with a fiberglass plate extending beyond the tank walls to support concrete anchoring, as required, to prevent flotation.

C. The Fiberglass tank shall have a stainless steel discharge bulkhead which terminates outside the tank wall with a 1-1/4" female pipe thread. The discharge bulkhead shall be factory installed and warranted by the manufacturer to be watertight. The tank shall be furnished with a field installed EPDM grommet to accept a 4.50" OD (4" DWV or SCH 40) inlet pipe.

D. The power and control cable shall connect to the pump by means of the provided NEMA 6P Electrical Quick Disconnect (EQD) and shall enter the tank through a field installed watertight strain relief connector supplied by the manufacturer. An electrical junction box shall not be permitted in the tank. Installation of the inlet grommet and cable strain relief shall require field penetration of the tank wall by the installing party. The tank shall also be vented to prevent sewage gases from accumulating inside the tank by means of a factory-provided, field-installed mushroom vent. The station cover shall be factory drilled to accept the mushroom vent. The tank and stainless steel discharge bulkhead shall be factory-tested to be watertight. The entire installation shall be provided in strict compliance with all applicable NEC and NFPA820 requirements for hazardous locations. The pump station supplier shall provide specific written direction to the installing contractor on the electrical installation provisions required for a fully-functional, code-compliant installation.

E. Consult the contract drawings for station tank sizes (diameter and height).

2.5 STATION VALVES AND PIPING

A. All discharge fittings and piping shall be constructed of polypropylene, EPDM or PVC. The discharge hose assembly shall include a shut-off valve rated for 200 psi WOG and a quick disconnect feature to simplify installation and pump removal. The bulkhead penetration shall be factory installed and warranted by the manufacturer to be watertight.

B. The grinder pump core shall include a factory-installed NEMA 6P electrical quick disconnect (EQD) for all power and control functions. The EQD will be supplied with 32’, 25’ of useable, electrical supply cable (ESC) to connect to the alarm panel. The EQD shall require no tools for assembly, seal against water before the electrical connection is made, and include radial seals to assure a watertight seal regardless of tightening torque. Plug-type connections of the power cable onto the pump housing will not be acceptable due to the potential for leaks and electrical shorts. Junction boxes are not acceptable due to the large number of potential leak points. The EQD shall be so designed to be conducive to field wiring as required.

C. The pump discharge shall be equipped with a factory installed, gravity operated, flapper-type integral check valve built into the discharge piping. The check valve will provide a full-ported passageway when open, and shall introduce a friction loss of less than 6 inches of water at maximum rated flow. Moving parts will be made of a 300 Series stainless steel and fabric reinforced synthetic elastomer to ensure corrosion resistance, dimensional stability, and fatigue strength. A nonmetallic hinge shall be an integral part of the flapper assembly providing a maximum degree of freedom to assure seating even at a very low back-pressure. The valve body shall be an injection molded part made of an engineered thermoplastic resin. The valve shall be rated for continuous operating pressure of 235 psi. Ball-type check valves are unacceptable due to their limited sealing capacity in slurry applications.

D. The pump discharge shall be equipped with a factory-installed, gravity-operated, flapper-type integral anti-siphon valve built into the discharge piping. Moving parts will be made of 300 Series stainless steel and fabric-reinforced synthetic elastomer to ensure corrosion resistance, dimensional stability, and fatigue strength. A nonmetallic hinge shall be an integral part of the flapper assembly, providing a maximum degree of freedom to ensure proper operation even at a very low pressure. The valve body shall be injection-molded from an engineered thermoplastic resin. Holes or ports in the discharge piping are not acceptable anti-siphon devices due to their tendency to clog from the solids in the slurry being pumped. The anti-siphon port diameter shall be no less than 60% of the inside diameter of the pump discharge piping.

E. The grinder pump station shall have an easily removable core assembly containing pump, motor, grinder, all motor controls, check valve, anti-siphon valve, electrical quick disconnect and wiring. The watertight integrity of the core unit shall be established by a 100% factory test at a minimum of 5 PSIG.

2.6 SUPPORTS AND THRUST BLOCKS

A. All piping connected to the pump station shall be supported in accordance with good commercial practice. The control panel, control power transformer, and discharge pressure gauge shall be mounted on a supporting framework of fabricated steel. The support frame shall be drilled to accept all equipment, and shall be constructed entirely of fabricated steel angle shapes.

2.7 FINISH

A. All above ground station piping, control panel, and exposed steel framework shall be cleaned with industrial grade chemical cleaner. The prime coat shall be zinc-based synthetic primer. The finish coat shall be a high performance protective enamel coating.

2.8 ELECTRICAL CONTROLS

A. A complete pump control system shall be provided as a part of the factory-built pump station assembly. The pump station control panel shall be tested as an integral unit by the pump station manufacturer.

1. All necessary motor starting controls shall be located in the cast iron enclosure of the core unit secured by stainless steel fasteners. Locating motor starting controls in a plastic enclosure is not acceptable. Wastewater level sensing controls shall be housed in a separate enclosure from motor starting controls. Level sensor housing must be sealed via a radial type seal; solvents or glues are not acceptable. Level sensing control housing must be integrally attached to pump assembly so that it may be removed from the station with the pump and in such a way as to minimize the potential for the accumulation of grease and debris accumulation, etc. Level sensing housing must be a high-impact thermoplastic copolymer over-molded with a thermo plastic elastomer. The use of PVC for the level sensing housing is not acceptable.
2. Non-fouling wastewater level controls for controlling pump operation shall be accomplished by monitoring the pressure changes in an integral air column connected to a pressure switch. The air column shall be integrally molded from a thermoplastic elastomer suitable for use in wastewater and with excellent impact resistance. The air

column shall have only a single connection between the water level being monitored and the pressure switch. Any connections are to be radial sealed with redundant O-rings. The level detection device shall have no moving parts in direct contact with the wastewater and shall be integral to the pump core assembly in a single, readily-exchanged unit. Depressing the push to run button must operate the pump even with the level sensor housing removed from the pump.

3. All fasteners throughout the assembly shall be 300 Series stainless steel. High-level sensing will be accomplished in the manner detailed above by a separate air column sensor and pressure switch of the same type. Closure of the high-level sensing device will energize an alarm circuit as well as a redundant pump-on circuit. For increased reliability, pump ON/OFF and high-level alarm functions shall not be controlled by the same switch. Float switches of any kind, including float trees, will not be accepted due to the periodic need to maintain (rinsing, cleaning) such devices and their tendency to malfunction because of incorrect wiring, tangling, grease buildup, and mechanical cord fatigue. To assure reliable operation of the pressure switches, each core shall be equipped with a factory installed equalizer diaphragm that compensates for any atmospheric pressure or temperature changes. Tube or piping runs outside of the station tank or into tank-mounted junction boxes providing pressure switch equalization will not be permitted due to their susceptibility to condensation, kinking, pinching, and insect infestation. The grinder pump will be furnished with a 6 conductor 14 gauge, type SJOW cable, pre-wired and watertight to meet UL requirements with a factory installed NEMA 6P EQD half attached to it.

B. Each grinder pump station shall include a NEMA 4X, UL-listed alarm panel suitable for wall or pole mounting. The NEMA 4X enclosure shall be manufactured of thermoplastic to ensure corrosion resistance. The enclosure shall include a hinged, lockable cover with padlock, preventing access to electrical components, and creating a secured safety front to allow access only to authorized personnel. The standard enclosure shall not exceed 12.5" W x 16" H x 7.5" D.

1. The panel shall contain one 15-amp single pole circuit breaker for the alarm circuit and one 15-amp double pole circuit breaker per core for the power circuit. The panel shall contain a push-to-run feature, an internal run indicator, and a complete alarm circuit. All circuit boards in the alarm panel are to be protected with a conformal coating on both sides and the AC power circuit shall include an auto resetting fuse.
2. The visual alarm lamp shall be inside a red, oblong lens at least 3.75" L x 2.38" W x 1.5" H. Visual alarm shall be mounted to the top of the enclosure in such a manner as to maintain NEMA 4X rating. The audible alarm shall be externally mounted on the bottom of the enclosure, capable of 93 dB @ 2 feet. The audible alarm shall be capable of being deactivated by depressing a push-type switch that is encapsulated in a weatherproof silicone boot and mounted on the bottom of the enclosure (push-to-silence button).
3. The high-level alarm system shall operate as follows:
   a. The panel will go into alarm mode if either pump's alarm switch closes. During the initial alarm mode both pumps will run and the alarm light and buzzer will be delayed for a period of time based on user settings (default is 3-1/2 minutes). If the station is still in high-level alarm after the delay, the light and buzzer will be activated.
   b. The audible alarm may be silenced by means of the externally mounted push-to-silence button.
   c. The visual alarm remains illuminated until the sewage level in the wet well drops below the "off" setting

4. The entire alarm panel, as manufactured and including any of the following options shall be listed by Underwriters Laboratories, Inc.

C. The alarm panel shall include a 20 amp, 250 VAC generator receptacle with a spring-loaded, gasketed cover suitably mounted to provide access for connection of an external generator while maintaining a NEMA 4X rating. An automatic transfer switch shall be provided, which automatically switches from AC power to generator power. Power shall be provided to the alarm panel through the generator receptacle whenever power is present at the receptacle, allowing the audible and visual alarms to function normally in generator mode. When power is no longer applied to the generator receptacle, the panel is automatically switched back to the AC Mains power. (No manual switching within the panel enclosure is necessary to switch from generator power back to AC Mains, so the mode cannot be inadvertently left in the generator position after pumping down the station in generator mode as is the case with a manual transfer switch).

PART 3 - EXECUTION

3.1 EXAMINATION

A. Contractor shall off-load equipment at installation site using equipment of sufficient size and design to prevent injury or damage. Station manufacturer shall provide written instruction for proper handling. Immediately after off-loading, contractor shall inspect complete pump station and appurtenances for shipping damage or missing parts. Any damage or discrepancy shall be noted in written claim with shipper prior to accepting delivery. Validate all station serial numbers and parts lists with shipping documentation. Notify the manufacturer's representative of any unacceptable conditions noted with shipper.

3.2 INSTALLATION

A. Earth excavation and backfill are specified under site work, but are also to be done as a part of the work under this section, including any necessary sheeting and bracing.

B. The contractor shall be responsible for handling ground water to provide a firm, dry subgrade for the structure, and shall guard against flotation or other damage resulting from general water or flooding.

C. The grinder pump stations shall not be set into the excavation until the installation procedures and excavation have been approved by the engineer.

D. Remove packing material. User instructions MUST be given to the owner. Hardware supplied with the unit, if required, will be used at installation. The basin will be supplied with a standard 4" inlet grommet (4.50" OD) for connecting the incoming sewer line. Appropriate inlet piping must be used. The basin may not be dropped, rolled or laid on its side for any reason.

E. Installation shall be accomplished so that 1 inch to 4 inches of access way, below the bottom of the lid, extends above the finished grade line. The finished grade shall slope away from the unit. The diameter of the excavated hole must be large enough to allow for the concrete anchor.

F. A 6" inch (minimum) layer of naturally rounded aggregate, clean and free flowing, with particle size of not less than 1/8" or more than 3/4" shall be used as bedding material under each unit.

G. A concrete anti-flotation collar, as detailed on the drawings, and sized according to the manufacturer's instructions, shall be required and shall be pre-cast to the grinder pump or poured in place. Each grinder pump station with its pre-cast anti-flotation collar shall have a minimum of three lifting eyes for loading and unloading purposes.

H. If the concrete is poured in place, the unit shall be leveled, and filled with water, to the bottom of the inlet, to help prevent the unit from shifting while the concrete is being poured. The concrete must be manually vibrated to ensure there are no voids. If it is necessary to pour the concrete to a level higher than the inlet piping, an 8" sleeve is required over the inlet prior to the concrete being poured.

I. The contractor will provide and install a 4-foot piece of 4-inch SCH 40 PVC pipe with water tight cap, to stub-out the inlet for the property owners' installation contractor, as depicted on the contract drawings.

J. E/One requires that an E/One Uni-Lateral assembly (E/One part number NB0184PXX or NC0193GXX) or E/One Redundant Check Valve (E/One part number PC0051GXX) be installed in the pipe lateral outside the home between the pump discharge and the street main on all installations.

K. The electrical enclosure shall be furnished, installed and wired to the grinder pump station by the contractor. An alarm device is required on every installation, there shall be no exceptions. It will be the responsibility of the contractor and the engineer to coordinate with the individual property owner(s) to determine the optimum location for the alarm panel.

L. The contractor shall mount the alarm device in a conspicuous location, as per national and local codes. The alarm panel will be connected to the grinder pump station by a length and type of cable (in conduit per specification requirements) as required by the system supplier . The power and alarm circuits must be on separate power circuits. The grinder pump stations will be provided with 32 feet, 25 feet of useable, electrical supply cable to connect the station to the alarm panel. This cable shall be supplied with a factory installed EQD half to connect to the mating EQD half on the core.

M. The contractor shall install, level, align, and lubricate all equipment associated with the pump station as shown indicated on the project drawings, and as outlined in the O&M manual provided with the equipment. Installation must be in accordance with written instructions supplied by the manufacturer at time of delivery.

N. Check motor and control data plates for compatibility to site voltage. Install and test the station ground prior to connecting line voltage to station control panel.

O. Prior to applying electrical power to any motors or control equipment, check all wiring for tight connection. Verify that all protective devices (fuses and circuit breakers) conform to project design documents. Manually operate circuit breakers and switches to ensure operation without binding. Open all circuit breakers and disconnects before connecting utility power. Verify line voltage, phase sequence and ground before actual start-up.

P. The entire installation shall be provided in strict compliance with all applicable NEC and NFPA820 requirements for hazardous locations. The pump station supplier shall provide specific written direction to the installing contractor on the electrical installation provisions required for a fully-functional, code-compliant installation.

3.3 FIELD QUALITY CONTROL

A. Operational Test

1. Prior to acceptance by Owner, an operational test of all pumps, and control systems shall be conducted to verify that the installed equipment meets the purpose and intent of these Specifications. Tests shall demonstrate that all equipment provided is electrically, mechanically, structurally, and otherwise acceptable; that it is safe and in optimum working condition; and that it conforms to the specified operating characteristics.
2. After construction debris and foreign material has been removed from the wet well, contractor shall supply clear water volume adequate to operate station through several pumping cycles. Observe and record operation of pumps, suction and discharge gage readings, ampere draw, pump controls, and liquid level controls. Check calibration of all instrumentation equipment, test manual control devices, and automatic control systems. Be alert to any undue noise, vibration or other operational problems.

B. Manufacturer's Start-up Services.

1. The manufacturer shall provide the services of qualified factory trained technician(s) who shall inspect the placement and wiring of each station, perform field tests as specified herein, and instruct the owner's personnel in the operation and maintenance of the equipment before the stations are accepted by the owner.
2. All equipment and materials necessary to perform testing shall be the responsibility of the installing contractor. This includes, as a minimum, a portable generator and power cable (if temporary power is required), water in each basin (filled to a depth sufficient to verify the high level alarm is operating), and opening of all valves in the system. These steps shall be completed prior to the qualified factory trained technician(s) arrival on site.
3. The services of a trained, factory-authorized technician shall be provided at a rate of 40 hours for every 100 grinder pump stations supplied.
4. Upon completion of the installation, the authorized factory technician(s) will perform the following test on each station:
   a. Make certain the discharge shut-off valve in the station is fully open.
   b. Turn ON the alarm power circuit and verify the alarm is functioning properly.
   c. Turn ON the pump power circuit. Initiate the pump operation to verify automatic "on/off" controls are operative. The pump should immediately turn ON.
   d. Consult the Manufacturer's Service Manual for detailed start-up procedures.

5. Upon completion of the start-up and testing, the manufacturer shall submit to the engineer the start-up authorization form describing the results of the tests performed for each grinder pump station. Final acceptance of the system will not occur until authorization forms have been received for each pump station installed and any installation deficiencies corrected.

3.4 CLEANING

A. Prior to acceptance, inspect interior and exterior of pump station for dirt, splashed material or damaged paint. Clean or repair accordingly. Remove from the job site all tools, surplus materials, scrap and debris.

3.5 PROTECTION

A. The pump station should be placed into service immediately upon completion of field startup. If operation is delayed, the station shall be stored and maintained per the manufacturer's written instructions until it is ready for use.

END OF SECTION 115000

SECTION 116000 – DUPLEX SUBMERSIBLE PUMP STATION

PART 1 - GENERAL FOR PUMP STATION No. 1

1.1 GENERAL REQUIREMENTS

A. The work required under this section includes, but is not limited to, furnishing all of the labor, materials, and equipment required to install, field test, and place into satisfactory operation the duplex pump station(s) as specified herein. Pumps and mechanical accessories shall be installed within the wet well as illustrated on the project Plans, and all duplex controls, valves, piping, pressure gauges, and control panels as shown and described on project drawings and specified herein.

B. The general provisions of the contract, including the General and Supplementary Conditions and General Requirements (if any) apply to the work specified in this section.

1.2 REFERENCES

A. Publications listed below form part of this specification to extent referenced in the text by basic designation only. Consult latest edition of publication unless otherwise noted.

1. American National Standards Institute (ANSI) and American Water Works Association (AWWA)

    a. ANSI B16.1 - Cast iron pipe flanges and flanged fittings
    b. ANSI/AWWA C115/A21.51 - Cast/ductile iron pipe with threaded flanges
    c. ANSI 253.1 - Safety Color Code for Marking Physical Hazards
    d. ANSI B40.1 - Gauges, Pressure and Vacuum
    e. AWWA C508 - Single Swing Check Valves
    f. AWWA C504 - Plug Valves

2. American Society for Testing and Materials (ASTM)

    a. ASTM A48 - Gray Iron Castings
    b. ASTM A126 - Valves, Flanges, and Pipe Fittings
    c. ASTM A307 - Carbon Steel Bolts and Studs
    d. ASTM F593 - Stainless Steel Bolts, Hex Cap Screws, and Studs
    e. ASTM A36 - Structural Steel

3. Institute of Electrical and Electronics Engineers (IEEE)

    a. ANSI/IEEE Std. 100 - Standard Dictionary of Electrical Terms
    b. ANSI/IEEE Std. 112 - Test Procedure for Polyphase Induction Motors
    c. IEEE Std. 242 - Protection of Industrial and Control Power Systems

4. National Electric Code (NEC), National Electrical Manufacturers Association (NEMA)

    a. NEC - National Electric Code
    b. NEC 701 - National Electric Code article 701
    c. NEMA Std. MG1 - Motors and Generators

5. Miscellaneous References

a. Ten-State Standards Recommended Standards for Sewage Works
b. Hydraulic Institute Standard for Centrifugal, Rotary and Reciprocating Pumps
c. NMTBA and JIC Std. National Machine Tool Builders Association & Joint Industrial Council Standards

1.3 SYSTEM DESCRIPTION

A. The contractor shall furnish and install automatically controlled submersible pumping station(s) with submersible pumps capable of handling raw unscreened sewage, sludge, and similar domestic liquids. Pump stations shall be installed in the locations shown on the Plans, and as specified herein.

B. The pumps and guide rail accessories shall be installed in the wet well as shown on the Plans. The pump control panel, liquid level control, valves, piping, and pressure gauges shall be installed within the wet well as illustrated on the project Plans, and all duplex controls, valves, piping, pressure gauges, and control panels as shown and described on project drawings and specified herein. Include separate Paragraphs for additional certifications.

C. The pump station design, materials of construction, pumps, valves and piping, and motor/electrical controls shall be manufactured and provided in strict accordance with the requirements as listed under PART 2 - PRODUCTS of this specification section

1.4 DESCRIPTION OF WORK REQUIRED

A. The extent of work required and requirements for the wastewater pumping station for this project are shown on the project drawings and described herein.

B. The work required at each wastewater pump station shall include, but is not limited to, the following:

1. Site grading, erosion control, weed control, construction of access roadway, gravel, and potable water service to the site as shown on the Plans.
2. Installation wastewater pumping stations as specified herein.
3. Piping required for each pump station, including all factory-furnished and installed piping, valves, fittings, Quick Discharge Connector, base elbow, submersible pumps, contractor-furnished piping and valves, stainless steel pump guide rails, and force main piping as specified herein, or as shown on the Plans.
4. Electrical work required for each pump station: main electrical service with utility meter and disconnect, station lighting as may be shown on the Plans, installation of an alarm light at each station, and all necessary conduit and wiring that may be required to provide power for proper installation and operation.
5. Pump station security fence as indicated on the Plans.
6. Finish work as required to complete the installation of the pump station: finish grading, erosion control, weed control, sod and/or grass seed, shrubbery, other landscaping indicated on the Plans.

C. The Contractor shall furnish and install, as shown on the Plans and specified herein, one automatic duplex submersible pump station. The station provided for this project shall comply with the detailed descriptions that follow.

1. The principal items of equipment to be provided with the pump station shall include two submersible centrifugal solids-handling pumps, each provided with a compatible Quick Discharge Connector system, guide rails, anchor bolts, stainless steel lifting chain with intermediate links and all associated hardware, a precast concrete wet well with top slab with integral aluminum wet well access cover, station valves, internal piping of the sizes indicated herein or on the Plans, precast valve pit and top slab with integral aluminum wet well access cover, and a complete factory-built

motor control center with circuit breakers, motor starters and automatic liquid level control system as specified herein to constitute a complete, working system.

2. Wet well: Factory fabricated from precast concrete.
3. Alternates proposed for use on this project shall be considered only if full and complete pre-submittal data for all proposed equipment is received no later than fourteen (14) calendar days prior to the bid date. Pre-submittal shall comply with the requirements of Section 1.06 below. The decision of the Engineer regarding the equality of any/all proposed alternates is final, and resubmittal of equipment will not be allowed.

D. Pumps and all mechanical accessories provided for each sewage pump station shall be installed in/on each wet well as indicated on the Plans and as outlined herein.

1. Pumping Station to be field fabricated, assembled, and tested with wet well for sewage pumps, collection of sanitary sewage and with sewage pumps and valve pit.
2. Wet well underground with valve pit underground with top 6" above finished grade as shown on the Drawings.
3. Wet well shall be factory fabricated from precast concrete.
4. The principal items of equipment to be provided with the pump station shall include two submersible centrifugal solids-handling pumps, each provided with a compatible Quick Discharge Connector system, guide rails, anchor bolts, stainless steel lifting chain with intermediate links and all associated hardware, a precast concrete wet well with top slab with integral aluminum wet well access cover, station valves, internal piping of the sizes indicated herein or on the Plans, precast valve pit and top slab with integral aluminum wet well access cover, and a complete factory-built motor control center with circuit breakers, motor starters and automatic liquid level control system as specified herein to constitute a complete, working system.

1.5 PERFORMANCE CRITERIA

A. Each pump shall be designed to handle raw, unscreened domestic sanitary sewage and pass up to a 3" spherical solid. Pumps shall be furnished with a minimum 4" discharge connection. Each pump shall be selected to provide the stated capacity and total dynamic head as noted elsewhere herein. Additional performance criteria can be found under the requirements of Section 2.06 B. herein.

B. Pressure Rating of Sewage Pumps and Discharge Piping Components: At least equal to sewage pump discharge pressure, but not less than 125 psig.

C. Pressure Rating of Other Piping Components: At least equal to system operating pressure.

D. Site power furnished to pump station shall be 240/3/60VAC 4-wire electrical service, maintained within industry standards. The available fault current provided at the pump station control panel is 30kA RMS symmetrical. Voltage tolerance shall be plus or minus 10 percent. Phase-to-phase unbalance shall not exceed 1% average voltage as set forth in NEMA standard MG-1. Control voltage shall not exceed 120 volts.

1.6 SUBMITTALS

A. Product Data

1. Include rated capacities; shipping, installed, and operating weights; furnished specialties; and accessories. Generic or non-specific submittals will not be considered acceptable and will be rejected.
2. Submittal shall include shop drawings, electrical ladder logic drawings, and support data as follows: Catalog cuts sheets reflecting characteristics for major items of equipment, materials of

construction, major dimensions, motor data, pump characteristic curves to illustrate the design duty point capacity (GPM), head (FT), pump efficiency (n_p), and brake horsepower (BHP). Electrical components used in the motor branch and liquid level control shall be fully described.

B. Shop Drawings

1. Provide layout of mechanical equipment and anchor bolt locations for the Quick Discharge Connector, base elbow, and guide rail components. Pipe penetrations and station access clearances shall be dimensioned relative to the station centerline. Electrical ladder logic drawings shall illustrate motor branch and liquid level control circuits to the extent necessary to validate function and integration of circuits to form a complete working system.
2. Show fabrication and installation details for each pumping station. Detail equipment assemblies and indicate dimensions, weights, loads, required clearances, method of field assembly, components, and location and size of each field connection.
   a. Wiring Diagrams: Power, signal, and control wiring.
   b. Control Panel: Complete schematic diagrams and drawings showing the equipment to be provided and dimensions for the same.
   c. Refer to Specification Section 262900 ("Manufactured Control Panels") for additional requirements.

C. Operation & Maintenance Manuals

1. Comprehensive instructions supplied at time of shipment shall enable personnel to properly install, operate, and maintain all equipment supplied. Content and instructions shall assume operations personnel are familiar with pumps, motors, piping and valves, but lack experience on the exact equipment supplied.
2. All Operation & Maintenance manuals shall be specific to the actual equipment supplied in accordance with this specification. Instruction manuals applicable to many different pump configurations, and which require the operator to selectively read various portions of the manual shall not be acceptable.
3. Documentation shall be specific to the equipment installed and collated in functional sections. Each section shall combine to form a complete system manual covering all aspects of equipment supplied by the manufacturer. Support data for any equipment supplied, even if mounted or included in overall station design, shall be provided by those supplying the equipment and a separate section shall be so designated in the O&M Manual. Instructions shall include the following as a minimum:

   a. Functional description of each major component, complete with operating instructions.
   b. Instructions for operating pumps and pump controls in all modes of operation.
   c. Calibration and adjustment of equipment for initial equipment start-up, replacement of level control components, or as may be required for routine maintenance.
   d. Support data for commercially available components not produced by the manufacturer, but supplied in accordance with the Specifications, shall be supported by literature from the prime manufacturer and incorporated as appendices.
   e. Electrical schematic diagram of the pump station circuits shall be in accordance with NFPA70. Schematics shall illustrate, to the extent of authorized repair, pump motor branch, control and alarm system circuits including interconnections. Wire numbers and legend symbols shall be shown. Schematic diagrams for individual components, not normally repairable by the station operator, need not be included. Details for such parts shall not be substituted for an overall system schematic. Partial schematics, block diagrams, and simplified schematics shall not be provided in lieu of an overall system diagram.
   f. Mechanical layout drawing of the pump station and components, prepared in accordance with good commercial practice, shall provide installation dimensions and location of all pumps, valves and piping.

4. Operation and maintenance instructions that rely on vendor cut-sheets and literature that includes general configurations, or requires operations personnel to selectively read portions of the manual shall not be acceptable. Operation and maintenance instructions must be specific to equipment supplied in accordance with these Specifications.

1.7 QUALITY ASSURANCE

A. Upon request from the Engineer (or Owner), the manufacturer shall prove financial stability long-term performance and the ability to produce the specified product within the specified delivery schedules. At the request of the Engineer (or Owner) the manufacturer shall provide evidence of the facilities, inventory, equipment and expertise that demonstrates the manufacturer's commitment to long-term customer service and product support. Such evidence shall be demonstrated exclusively by a visit to the pump station manufacturer's facility by the Engineer (or Owner).

B. The manufacturer must show proof of original product design and testing. Products violating intellectual property regulations shall not be allowed, as they may violate international law and expose the user or Engineer to unintended liabilities. "Reverse-engineered" products fabricated to substantially duplicate the design of an original product shall not be allowed, as they may contain substantial differences in tolerances and material applications addressed in the original design, which may contribute to product failure.

C. The manufacturer must show that the basic pump station design configuration and equipment used in the pump station is a standard product and has been factory tested, and shall be marketed as all components to be supplied having been assembled, operated, and tested to meet the requirements of these Specifications.

D. The term "pump manufacturer" or "pump station manufacturer" shall be defined as the entity which designs, fabricates, machines, assembles, hydraulically tests, and warrants the final product. Any entity that does not meet this definition will not be considered a "pump manufacturer" or "pump station manufacturer" and is not an acceptable supplier. For quality control reasons and to ensure future pump and parts availability, all major components of the pumps provided shall be readily available from the manufacturer's regular inventory in the United States of America.

E. All pump openings and passages shall be of adequate size to pass 3" diameter spheres (minimum) and any trash or stringy material that can pass through an average house collection system.

F. The manufacturer's technical representative shall inspect the completed installation, correct or supervise the correction of any defect or malfunction, and instruct operating personnel in the proper operation and maintenance of the equipment as described in Part 3 – EXECUTION of this specification section.

G. Upon request from the Engineer, the equipment manufacturer shall document the existence of a *factory-authorized* service and repair facility within a reasonable distance of the job site prior to bidding the specified pump station.

H. Electrical Components, Devices, and Accessories: Listed and labeled as defined in NFPA 70, Article 100, by testing agency acceptable to authorities having jurisdiction, marked for intended use, and manufactured in strict accordance with the National Electric Code.

1.8 MANUFACTURER'S EXPERIENCE REQUIREMENTS

A. It is the specific intention of these Specifications that the wastewater pump station provided for this project be provided by a manufacturer with documented experience in the design, production, and successful installation of units required for this project.

1. The station manufacturer shall have a minimum of twenty (20) calendar years of experience in the production of submersible sewage pumps and related equipment, and shall have the facilities and personnel in place to provide support of the specified units described herein.
2. Upon request, the pump manufacturer shall document the existence of no less than ten (10) installations of the exact specified equipment that has been successfully installed and is in full-time service. All reference stations provided shall be of the exact design and type as the equipment that is specified herein, with only motor horsepower or means of level control varying between the referenced installations and those specified herein.
3. The pump manufacturer shall maintain adequate levels of inventory to be able to provide replacement parts for pumps, including major components such as impellers, casings, and motors, directly from normal stock. Proof of inventory at the pump station manufacturer's normal place of business may be required prior to approval of any submittal data. Proof of inventory shall be confirmed by a visit to the manufacturer's facility, with the cost of the visit to be borne by the pump station manufacturer. Costs for this trip, if required, shall include transportation, lodging, and all meals for not less than six (6) representatives of the municipality and/or the consulting engineer.

B. No consideration will be given to any equipment manufacturer who cannot comply with all of the requirements stated in Sections 1.05, 1.07, and 1.08.

1.9 MANUFACTURER'S WARRANTY

A. The manufacturer shall warrant all equipment provided to be of quality construction, free of defects in material and workmanship. A written warranty shall include specific details described below:

1. Manufacturer's standard form in which manufacturer agrees to repair or replace components of packaged pumping stations that fail in materials or workmanship within specified warranty period.
2. Warranty Period of one year from date of Final Acceptance, except for items specifically noted otherwise.

B. Components that fail to perform as specified by the Engineer, or as represented by the manufacturer, or as proven defective in service during the warranty period, shall be replaced, repaired, or satisfactorily modified by the manufacturer.

PART 2 - PRODUCTS

2.1 MANUFACTURER

A. In other Part 2 articles where subparagraph titles below introduce lists, the following requirements apply for product selection:
1. Available Manufacturers: Subject to compliance with requirements, equipment manufacturers offering products that may be incorporated into the Work include, but are not limited to, the manufacturers specified.
2. Manufacturers: Subject to compliance with requirements, provide products by the manufacturers specified.

B. After execution of the contract, the contractor may offer substitutions to the specified equipment for consideration. The equipment proposed for substitution must be in compliance with Section 1.04.C.3, superior in construction and performance to that specified in the contract, and the higher quality must be demonstrated by a list of current users of the proposed equipment in similar installations.

C. In event the contractor obtains Engineer's approval for equipment substitution, the contractor shall, at his own expense, make all resulting changes to the enclosures, buildings, piping or electrical systems as required to accommodate the proposed equipment. Revised detail drawings illustrating the substituted equipment shall be submitted to the Engineer prior to acceptance.

D. It will be assumed that the contractor's cost for the alternate equipment proposed is less for the proposed substitution, and if approved, the contract price shall be reduced by an amount equal to the savings.

2.2 EQUIPMENT

A. The contractor is responsible for supplying all materials and equipment used on this project. The Contractor is responsible for coordination of delivery, unloading, handling, storage, installation, testing, startup, and all ancillary equipment as if the equipment were supplied by the Contractor.

B. The Scope of Supply for equipment to be furnished is as follows:

1. *Two* *Wastewater Pumps* – Flygt NP 3085 submersible sewage pumps, each to be rated to deliver 114 GPM @ 52' TDH, and driven by approximately 4 HP, 3415 RPM motor suitable for operation on 240/3/60 electrical service. Accessories to be provided with each pump shall include the following, for installation by others as shown on the Plans or as detailed in the submittal data to follow:

- 4" QDC (quick discharge connector) base elbow to 4" piping
- S.S. anchor bolts
- 50' electric power cable
- 30' S. S. lifting chain with intermediate tie-off links
- upper and intermediate S.S. guide bar brackets
- 2" S.S. guide rails.
- certified performance testing, with results provided for approval
- spare parts required - seal kits
- S.S. hanger for chains, floats, and power leads with S.S sinch holders.

One *Control Panel* –NEMA 4X S.S. enclosure, duplex control panel for the above also suitable for operation with 240/3/60 electrical service. Refer to Specification Section 262900 ("Manufactured Control Panels") for additional requirements. The panel will be provided with NEMA-rated FVNR motor starters, circuit breakers, and overload protection as required by the application, as documented in Part 2.9 below.

Refer to Electrical Plans for detailed Wetwell Junction Box requirements. All pump and sensor cables will be routed to this box without cutting, as shown on the Plans.

One *Wet Well Access Cover* – 3' x 4-6' aluminum double-door access cover, for installation in the wet well top slab. The cover shall be rated for 300 PSF live load, and shall include stainless steel hardware, lifting assists for each leaf, slam lock, and other accessories as specified.

One *Valve Vault Access Cover* – 4' x 6' aluminum double-door access cover, for installation in the valve vault top slab. The cover shall be rated for 300 PSF live load, and shall include stainless steel hardware, lifting assists for each leaf, slam lock, and other accessories as specified.

C. The pump station shall be equipped with dual pressure gauges to monitor discharge pressures of each pump. Pressure gauges shall be isolated from the wastewater by the use of neoprene isolator rings to ensure accurate, repeatable readings with no possibility of compromising gauge function. Gauges shall be a minimum of 6 inches in diameter, and shall be graduated in feet water column. Rated accuracy shall be 1 percent of full scale reading. Pressure gauge shall be graduated 0 to 140 feet water column minimum. Gauge kit shall be board mounted and complete with all stainless steel hoses and stainless steel fittings as specified in Section 2.09.F.

1. Under no circumstances shall the pressure gauges, connecting piping, or isolator rings be exposed to raw sewage. Only suitable oil shall be used in the gauge and sensing piping.

D. If the station wet well depth exceeds twenty (20) feet in depth, each pump shall be furnished with a 304 stainless steel intermediate guide rail bracket to provide the correct guide rail splicing and support.

2.3 PUMP DESIGN

A. Requirements

1. Furnish and install two (2) submersible non-clog wastewater pumps. Each pump shall be equipped with a 4 HP, submersible electric motor connected for operation on 240 volts, 3 phase, 60 hertz, 4 wire service, with 50 feet of submersible cable (SUBCAB) suitable for submersible pump applications. The power cable shall be sized according to NEC and ICEA standards and also meet with P-MSHA Approval.

B. Pump Design Configuration

1. The pump shall be supplied with a mating cast iron 3 inch discharge connection and be capable of delivering 114 GPM at 52 FT. TDH. An additional point on the same curve shall be 200 GPM at 35 feet total head. Shut off head shall be 78 feet (minimum). The pump(s) shall be automatically and firmly connected to the discharge connection, guided by no less than two guide bars extending from the top of the station to the discharge connection. There shall be no need for personnel to enter the wet-well. Sealing of the pumping unit to the discharge connection shall be accomplished by a machined metal to metal watertight contact. Sealing of the discharge interface with a diaphragm, O-ring or profile gasket will not be acceptable. No portion of the pump shall bear directly on the sump floor. Each pump shall be fitted with 20 feet of stainless steel lifting chain or stainless steel cable. The working load of the lifting system shall be 50% greater than the pump unit weight.

C. Pump Construction

1. Major pump components shall be of grey cast iron, ASTM A-48, Class 35B, with smooth surfaces devoid of blow holes or other irregularities. The lifting handle shall be of stainless steel. All exposed nuts or bolts shall be AISI type 316 stainless steel construction. All metal surfaces coming into contact with the pumpage, other than stainless steel or brass, shall be protected by a factory applied spray coating of acrylic dispersion zinc phosphate primer with a polyester resin paint finish on the exterior of the pump.
2. Sealing design shall incorporate **metal-to-metal contact** between machined surfaces. Critical mating surfaces where watertight sealing is required shall be machined and fitted with Nitrile or optional Viton rubber O-rings. Fittings will be the result of controlled compression of rubber O-rings in two planes and O-ring contact of four sides without the requirement of a specific torque limit.

D. Cooling System

1. Motors are sufficiently cooled by the surrounding environment or pumped media. A water cooling jacket is not required.

E. Cable Entry Seal

1. The cable entry seal design shall preclude specific torque requirements to insure a watertight and submersible seal. The cable entry shall consist of a single cylindrical elastomer grommet, flanked by washers, all having a close tolerance fit against the cable outside diameter and the entry inside diameter and compressed by the body containing a strain relief function, separate from the function of sealing the cable. The assembly shall provide ease of changing the cable when necessary using the same entry seal.

F. Motor

1. The pump motor shall be a NEMA B design, induction type with a squirrel cage rotor, shell type design, housed in an air filled, watertight chamber. The stator windings shall be insulated with moisture resistant Class H insulation rated for 180°C (356°F). The stator shall be insulated by the trickle impregnation method using Class H monomer-free polyester resin resulting in a winding fill factor of at least 95%. The motor shall be inverter duty rated in accordance with NEMA MG1, Part 31.The stator shall be heat-shrink fitted into the cast iron stator housing. The use of multiple step dip and bake-type stator insulation process is not acceptable. The use of bolts, pins or other fastening devices requiring penetration of the stator housing is not acceptable. The motor shall be designed for continuous duty handling pumped media of 40°C (104°F) and capable of no less than 30 evenly spaced starts per hour. The rotor bars and short circuit rings shall be made of cast aluminum. Thermal switches set to open at 125°C (260°F) shall be embedded in the stator end coils to monitor the temperature of each phase winding. These thermal switches shall be used in conjunction with and supplemental to external motor overload protection and shall be connected to the control panel. The motor and the pump shall be produced by the same manufacturer.
2. The combined service factor (combined effect of voltage, frequency and specific gravity) shall be a minimum of 1.15. The motor shall have a voltage tolerance of plus or minus 10%. The motor shall be designed for operation up to 40°C (104°F) ambient and with a temperature rise not to exceed 80°C. A performance chart shall be provided upon request showing curves for torque, current, power factor, input/output kW and efficiency. This chart shall also include data on starting and no-load characteristics. The motor horsepower shall be adequate so that the pump is non-overloading throughout the entire pump performance curve from shut-off through run-out.
3. The motor shall be capable of continuous submergence underwater without loss of watertight integrity to a depth of 65 feet or greater.
4. The power cable shall be sized according to the NEC and ICEA standards and shall be of sufficient length to reach the junction box without the need of any splices. The outer jacket of the cable shall be oil resistant chlorinated polyethylene rubber. The cable shall be capable of continuous submergence underwater without loss of watertight integrity to a depth of 65 feet or greater.

G. Bearings

1. The pump shaft shall rotate on two bearings. Motor bearings shall be permanently grease lubricated. The upper bearing shall be a single deep groove ball bearing. The lower bearing shall be a two row angular contact bearing to compensate for axial thrust and radial forces. **Single row lower bearings are not acceptable.** The minimum L_{10} bearing life shall be 50,000 hours at any usable portion of the pump curve.

H. Mechanical Seal

1. Each pump shall be provided with a tandem mechanical shaft seal system consisting of two totally independent seal assemblies. The seals shall operate in a lubricant reservoir that hydro-dynamically lubricates the lapped seal faces at a constant rate. The lower, primary seal unit, located between the pump and the lubricant chamber, shall contain one stationary and one

positively driven rotating, corrosion and abrasion resistant **tungsten-carbide** ring. The upper, secondary seal unit, located between the lubricant chamber and the motor housing, shall contain one stationary and one positively driven rotating, corrosion and abrasion resistant tungsten-carbide seal ring.

2. Each seal interface shall be held in contact by its own spring system. The seals shall require neither maintenance nor adjustment nor **depend on direction of rotation for sealing**. The position of both mechanical seals shall depend on the shaft. Mounting of the lower mechanical seal on the impeller hub will not be acceptable. For special applications, other seal face materials shall be available.
3. **The following seal types shall not be considered acceptable or equal to the dual independent seal specified:** shaft seals without positively driven rotating members, or conventional double mechanical seals containing either a common single or double spring acting between the upper and lower seal faces. No system requiring a pressure differential to offset pressure and to effect sealing shall be used.
4. Each pump shall be provided with a lubricant chamber for the shaft sealing system. The lubricant chamber shall be designed to prevent overfilling and to provide lubricant expansion capacity. The drain and inspection plug, with positive anti-leak seal shall be easily accessible from the outside. The seal system shall not rely upon the pumped media for lubrication. **The motor shall be able to operate dry without damage while pumping under load**.
5. Where a seal cavity is present in the seal chamber, the area about the exterior of the lower mechanical seal in the cast iron housing shall have cast in an integral concentric spiral groove. This groove shall protect the seals by causing abrasive particulate entering the seal cavity to be forced out away from the seal due to centrifugal action.
6. Seal lubricant shall be FDA Approved, nontoxic.

I. Pump Shaft

1. Pump and motor shaft shall be the same unit. The pump shaft is an extension of the motor shaft. Couplings shall not be acceptable. The pump shaft shall be stainless steel – ASTM A479 S43100-T.
2. If a shaft material of lower quality than stainless steel – ASTM A479 S43100-T is used, a shaft sleeve of stainless steel – ASTM A479 S43100-T is used to protect the shaft material. However, shaft sleeves only protect the shaft around the lower mechanical seal. No protection is provided in the lubricant housing and above. Therefore, the use of stainless steel sleeves will not be considered equal to stainless steel shafts.

J. Impellar

1. The impeller shall be of grey cast iron, Class 35B. Select impellers shall be available in Hard-Iron™ (ASTM A-532 (Alloy III A) 25% chrome cast iron), dynamically balanced, semi-open, multi-vane, back-swept, non-clog design. The impeller vane leading edges shall be mechanically self-cleaned upon each rotation as they pass across a spiral groove located on the volute bottom. The internal volute bottom shall provide effective sealing between the pump volute and the multi-vane, semi-open impeller. The sharp spiral groove(s) shall provide the shearing edge(s) across which each impeller vane leading edge shall cross during its rotation in order to remain unobstructed. The clearance between the internal volute bottom and the impeller leading edges shall be adjustable.
2. The grey iron impeller vanes shall have screw-shaped leading edges that are hardened to Rc 45, Hard-Iron™ impellers hardened to Rc 60 and shall be capable of handling solids, fibrous materials, heavy sludge and other matter found in waste water. The screw shape of the impeller inlet shall provide an inducing effect for the handling of sludge and rag-laden wastewater. Impellers shall be locked to the shaft and held by an impeller bolt.

K. Volute/Suction Cover

1. The pump volute shall be a single piece grey cast iron, ASTM A-48, Class 35B, non-concentric design with smooth passages of sufficient size to pass any solids that may enter the impeller. Minimum inlet and discharge size shall be as specified. The volute shall have a replaceable suction

cover insert ring in which are cast spiral-shaped, sharp-edged groove(s). The spiral groove(s) shall provide trash release pathways and sharp edge(s) across which each impeller vane leading edge shall cross during rotation so to remain unobstructed. The insert ring shall be cast of grey cast iron, Class 35B, or Hard-Iron™ (ASTM A-532 (Alloy III A) 25% chrome cast iron) when used with Hard-Iron™ impellers and provide effective sealing between the multi-vane semi-open impeller and the volute housing.

L. Protection

1. All stators shall incorporate thermal switches in series to monitor the temperature of each phase winding. The thermal switches shall open at 125°C (260°F), stop the motor and activate an alarm.
2. A leakage sensor shall be available as an option to detect water in the stator chamber. The Float Leakage Sensor (FLS) is a small float switch used to detect the presence of water in the stator chamber. When activated, the FLS will stop the motor and send an alarm both local and/or remote. **USE OF VOLTAGE SENSITIVE SOLID STATE SENSORS AND TRIP TEMPERATURE ABOVE 125°C (260°F) SHALL NOT BE ALLOWED.**
3. The thermal switches and FLS shall be connected to a Mini CAS (Control and Status) monitoring unit. The Mini CAS shall be designed to be mounted in any control panel.

2.4 AUTOMATIC QUICK DISCHARGE CONNECTION

A. Each pump shall be furnished with a submersible discharge connection system to permit removal and installation of the pump without the necessity of an operator entering the wet well. The design must insure an automatic and firm connection of the pump to the discharge piping when lowered into place. The connection shall be metal-to-metal without the use of gaskets, O-rings, or grommets.

B. The QDC shall be ASTM A48, Class 30 iron with integral guide rail pilots and shall be provided with all hardware and anchor bolts required for permanent installation to the wet well floor. The base plate shall be designed with an integral 90^0 elbow for connection to the vertical discharge piping utilizing standard ANSI 125 lbs. flanges. The base plate shall be coated with an epoxy coating for corrosion resistance. The manufacturer shall provide all necessary drawings to insure proper installation and alignment of baseplate within the wet well.

C. Each pump shall be provided with a replaceable ASTM A48, Class 30 iron slide guide attached to pump discharge flange. The connection between the slide guide and the base shall be solely through metal-to-metal contact between the guide and the QDC elbow. Systems that require the use of gaskets, O-rings, elastomer seals, or grommets shall not be acceptable.

1. The slide guide shall direct the pump down two vertical guide rails and onto the discharge connection in a simple lineal movement. The slide guide shall be designed to transmit full weight of the pump to the base (QDC) flange.
2. No portion of the pump shall rest directly on the bottom of the wet well or be supported by the guide rails, or lifting cable (chain). The presence of sludge and grease on guide rails shall not hinder removal of the pump during the lifting operation.

D. The contractor shall provide two lengths of Schedule 40 304L stainless steel guide rail pipes for each pump. Guide rails shall be unspliced (unless the wet well depth exceeds twenty feet – see Section 2.05.D above), and rail size (diameter) shall be as specified by the pump manufacturer.

E. Upper (and intermediate, if required) guide rail brackets, and a lifting cable or chain shall be furnished for each pump. Guide rails shall be plumb, attached to the pump base (QDC) at the bottom and the guide rail brackets as described above. Upper and intermediate guide rail brackets shall be 304 S.S.

F. Lifting cable or chain shall be 304 S.S., permanently attached to the lifting bail of each pump. Excess length necessary to utilize the hoist (if specified herein) shall be secured to the upper guide rail bracket in the wet well. When lifting chain is used, large intermediate lifting links shall be provided every 3-5' along the length of the chain to facilitate use. If lifting cable is provided, a crimped ball end shall be provided at the upper end of each cable for attaching to the lifting hoist drum.

G. All bolts, machine screws, nuts, washers, and lock washers for complete assembly of access cover, guide rail assembly, discharge elbow (QDC), and discharge piping shall be 304 stainless steel.

2.5 ACCESS COVERS

A. Wet Well Access

1. The wet well access cover shall be fabricated from welded aluminum sections. A hinged aluminum door shall be provided for each pump. The hinged door shall be fabricated from 1/4" thick aluminum with non-skid diamond tread on upper surface. All hardware on access assembly shall be stainless steel with a flush upper surface without protrusions. For safety, the door shall have a 300psf rating and be fitted with a recessed staple for padlock. Door shall be furnished with a flush aluminum drop handle and automatic hold open arm.

    a. The access cover shall be provided with an aluminum frame, which shall be cast into the polymer top slab described above. Under no circumstances shall access cover leaves simply be bolted to a concrete base without a full support frame that is cast into the concrete.

2. Safety grating shall be provided to protect personnel from falling into the wet well when the access doors are open. The fall-through protection system shall be a grate consisting of two leafs made of 6061-T6 aluminum hinged on the same side of the hatch. The safety grating system shall be directly attached to the aluminum access cover frame (not bolted to the underside of the concrete base), and shall be designed to provide continuous safety assurance in both closed and open positions.

    a. When closed, the grate shall allow visibility for inspections and performance of limited maintenance below it. When open, the grate shall act as an additional barrier to the access door opening.
    b. Safety grating shall be designed to withstand a minimum pedestrian load of 300 lbs. per square foot. The grate openings shall be 3’ x 4’-6” to allow both visual inspection and limited access for maintenance purposes when the grate is closed.
    c. Each leaf of the safety grating will pivot on aluminum hinge devices with 316 S.S. hardware that shall permit them to rotate upward 90 degrees and automatically lock in place. Aluminum pull rods will be attached to the each grate leaf so the operator is positioned with the grate between him and the hatch’s opening whenever he raises a leaf. Each grate leaf will have a rod made from 316 S.S. that automatically engages to secure the leaf in its open position, and can be lifted upward to permit the grate leaf to close. The hatch cover will not be able to shut until the grate is closed, thereby ensuring the grate is in position when the next operator opens the hatch cover.

    d. The grate shall have an OSHA safety orange finish to increase visual awareness of the safety hazard. All hardware components shall be 316 S.S. to withstand corrosive wastewater environments. Safety grating shall be affixed only to the access cover frame, and not to the concrete top slab. The use of flexible safety netting is not considered a satisfactory alternative to the specified safety grating.

B. Valve Pit Access

1. The valve pit access cover shall be fabricated from welded aluminum sections. A hinged aluminum door shall be provided for each pump. The hinged door shall be fabricated from 1/4" thick aluminum with non-skid diamond tread on upper surface. All hardware on access assembly shall be stainless steel with a flush upper surface without protrusions. For safety, the door shall have a 300psf rating and be fitted with a recessed staple for padlock. Door shall be furnished with a flush aluminum drop handle and automatic hold open arm.

   a. The access cover shall be provided with an aluminum frame, which shall be cast into the polymer top slab described above. Under no circumstances shall access cover leaves simply be bolted to a concrete base without a full support frame that is cast into the concrete.

2. Safety grating shall be provided to protect personnel from falling into the wet well when the access doors are open. The fall-through protection system shall be a grate consisting of two leafs made of 6061-T6 aluminum hinged on the same side of the hatch. The safety grating system shall be directly attached to the aluminum access cover frame (not bolted to the underside of the concrete base), and shall be designed to provide continuous safety assurance in both closed and open positions.

   a. When closed, the grate shall allow visibility for inspections and performance of limited maintenance below it. When open, the grate shall act as an additional barrier to the access door opening.
   b. Safety grating shall be designed to withstand a minimum pedestrian load of 300 lbs. per square foot. The grate openings shall be 4’ x 6’ to allow both visual inspection and limited access for maintenance purposes when the grate is closed.
   c. Each leaf of the safety grating will pivot on aluminum hinge devices with 316 S.S. hardware that shall permit them to rotate upward 90 degrees and automatically lock in place. Aluminum pull rods will be attached to the each grate leaf so the operator is positioned with the grate between him and the hatch’s opening whenever he raises a leaf. Each grate leaf will have a rod made from 316 S.S. that automatically engages to secure the leaf in its open position, and can be lifted upward to permit the grate leaf to close. The hatch cover will not be able to shut until the grate is closed, thereby ensuring the grate is in position when the next operator opens the hatch cover.

   d. The grate shall have an OSHA safety orange finish to increase visual awareness of the safety hazard. All hardware components shall be 316 S.S. to withstand corrosive wastewater environments. Safety grating shall be affixed only to the access cover frame, and not to the concrete top slab. The use of flexible safety netting is not considered a satisfactory alternative to the specified safety grating.

2.6 STATION VALVES AND PIPING

A. Each pump shall be equipped with a full flow type check valve capable of passing a 3" spherical solid. Valve shall be constructed with ANSI flanged ends and fitted with a weighted external lever. Valve seat shall be constructed of stainless steel, secured to the body to ensure concentricity, sealed by an O-ring, and shall be replaceable. The valve body shall be cast iron incorporating a clean-out port large enough to allow removal and/or replacement of the valve clapper without removing valve or piping from the line. Valve clapper shall have a molded neoprene seating surface incorporating low pressure sealing rings.

Valve hinge pin and internal hinge arm shall be stainless steel supported on each end in brass bushings. Shaft nut shall have double O-rings which shall be shall be easily replaceable without requiring access to interior of valve body.

1. All internal hardware shall be stainless steel. Valve shall be rated at 175 PSI working pressure, 350 PSI hydrostatic test pressure. Valves other than full flow type or valves mounted in such a manner that prevents the passage of a 3" spherical solid shall not be acceptable.
2. Check valves shall be a regular production item that are commercially available from a variety of sources. Specially-constructed check valves that are specific to a particular brand of packaged pumping station and are only available from the station manufacturer are not acceptable.

B. Each discharge line shall be equipped with a 2-way plug valve to permit isolation of the pumps from the common discharge header. The plug valve shall be non-lubricated type. Valve body shall be cast iron with flanged end connections drilled to ANSI 125 pound standard. Valve shall be furnished with a drip-tight shutoff plug mounted in stainless steel bearings, and shall have a resilient facing bonded to the sealing surface. Valves shall have ports designed to pass 3" spherical solids.

C. Flanged header pipe shall be centrifugally cast, ductile iron, complying with the requirements of ANSI/AWWA A21.51/C115 and Class 53 thickness. Flanges shall be cast iron Class 125, and shall comply with ANSI B16.1. Pipe and flanges shall be threaded and suitable thread sealant applied before assembling flange to pipe. Bolt holes shall be in angular alignment within ½° between flanges. Flanges shall be faced and a gasket finish applied. All pipes connected to the pump station shall be supported according to good commercial practice.

D. The station shall be provided with an integral discharge bypass piping arrangement to allow the operator to connect an external emergency pump in the event of a power and/or station failure. The station header pipe shall incorporate a 2-way plug valve to permit emergency access to the pump station force main after isolation of the pumps. The plug valve shall be non-lubricated, tapered type. Valve body shall be cast iron with flanged end connections drilled to 125 pound standard. Valve shall be furnished with a drip-tight shutoff plug mounted in stainless steel bearings, and shall have a resilient facing bonded to the sealing surface. The header pipe shall penetrate the station sidewall and terminate with a 4" male OPW type quick connect fitting.

E. Separate pressure gauges shall be provided for each pump, and shall be protected from the pumped media by means of isolator rings to assure accurate, repeatable pressure readings without compromising gauge function. Any pressure gauge design that allows raw sewage or sludge to contact the internals of the pressure gauge is not considered acceptable and will not be allowed.

1. The isolator ring shall incorporate a flexible rubber (Viton®) sleeve designed to measure line pressure throughout the full 360° circumference of the pipe inner diameter. The inside diameter of the isolator ring shall match that of the pipe to assure smooth, unobstructed flow, self-cleaning operation, and minimize turbulence and friction. Isolator ring body shall be fabricated of carbon steel. End plates shall be acetyl homo polymer and the elastomeric sleeve shall be Viton®.
2. Isolator rings shall be of the same diameter as the specified station piping, and shall fit inside the bolt circle of 125# ANSI flanges. Face to face length of the isolator ring shall conform to specification MSS-SP67. The center section shall have a cavity behind the rubber sleeve filled with a high viscosity food grade silicone fluid to transfer pressure to the gauge. The isolator system shall dampen out surges or pressure spikes and eliminate gauge fluctuations without the need for a separate snubber. All pressure instruments attached to the sensor shall be rigidly supported by a post at least 0.875 inches diameter welded to the isolator. Isolator rings with more than one instrument, shall have minimum 1/2" NPT connections; 1/4" NPT fittings are not acceptable.
3. Isolator rings shall be vacuum-filled and permanently sealed at the factory using a high viscosity food grade silicone fluid with a modular seal consisting of a rubber membrane and needle fitting to allow removal and replacement of pressure instruments without compromising the vacuum fill.

The needle fitting shall have both 1/4" NPT(F) thread and 1/2 NPT(M) threads. Pressure isolator shall be capable of operating under pressure with all instruments removed with no loss of fill fluid, without isolating valves.

4. Pressure instruments shall be attached to the isolator with a hand tightened lock ring. Maximum operating pressure without leakage shall be 1,000 psi. In addition, all gauges and/or instrumentation shall be prefilled at the factory with high viscosity food grade silicone fluid and supplied with a fitting that shall allow them to be installed and/or replaced in the field without the need for vacuum filling. The system shall be designed to allow field replacement of gauges without service interruption or process spills. No isolation valves shall be required. No tools shall be required to change pressure gauges and/or instruments. Isolator rings with a fill plugs that can be removed with the resultant loss of fluid shall not be acceptable. Standard tapped single point connections or diaphragm seals vulnerable to plugging by debris or deposits shall not be acceptable.

2.7 SUPPORTS AND THRUST BLOCKS

A. All piping connected to the pump station shall be supported in accordance with good commercial practice. The control panel, control power transformer, and discharge pressure gauge shall be mounted on a supporting framework of fabricated steel. The support frame shall be drilled to accept all equipment, and shall be constructed entirely of fabricated steel angle shapes.

2.8 FINISH

A. All above ground station piping, control panel, and exposed steel framework shall be cleaned with industrial grade chemical cleaner. The prime coat shall be zinc-based synthetic primer. The finish coat shall be a high performance protective enamel coating.

2.9 ELECTRICAL CONTROLS

A. A complete pump control system shall be provided as a part of the factory-built pump station assembly. The pump station control panel shall be tested as an integral unit by the pump station manufacturer.

B. Refer to Specification Section 262900 (“Manufactured Control Panels”) for additional requirements.

C. The electrical control equipment shall be mounted within the NEMA 4X stainless steel pump control panel described above. The enclosure door shall be hinged and sealed with a neoprene gasket. It shall include a removable plated steel back panel on which control components shall be mounted. Back panel shall be secured to enclosure with collar studs. Operator controls shall be mounted on the enclosure door. The control enclosure shall be mounted within the fiberglass station enclosure. The control panel will be equipped with vapor emission type corrosion inhibitors.

D. All control components shall be securely fastened to a removable back panel with screws and lock washers. Switches, indicators and instruments shall be mounted through the control panel door. All control devices and instruments shall be secured to the sub-plate with machine screws and lock washers. Mounting holes shall be drilled/tapped, and self-tapping screws shall not be used to mount any components. All connections from the back panel to door mounted or remote devices shall be made through terminal blocks. All control devices shall be clearly labeled to indicate function.

E. A main terminal block and ground bar shall be furnished for field connection of the incoming electrical supply. The connections shall be designed to accept copper conductors of sufficient size to serve anticipated pump station loads. Main terminal block shall be mounted to allow incoming wire bending space in accordance with Article 373 of the National Electrical Code (NEC).

F. Pump station controls shall conform to third party safety certification. The finished control panel shall bear a serialized UL label listed for "Enclosed Industrial Control Panels". The enclosure, and all components mounted on the sub-panel or control cover, shall conform to UL descriptions and procedures.

G. The control panel shall be equipped with a transient voltage surge suppressor to minimize damage to the pump motors and control from transient voltage surges. The suppressor shall utilize thermally protected silicon-oxide varistors encapsulated in a non-conductive housing. Mechanical indicators shall be provided on each phase to indicate protection has been lost.

H. Motor Branch Components

1. A properly sized heavy duty air circuit breaker shall be furnished for each pump motor, and shall have a symmetrical RMS interrupting rating of 30,000 amperes at 230 volts. Circuit breakers shall be sealed by the manufacturer after calibration to prevent tampering.
   a. A padlocking operating mechanism shall be installed on each motor circuit breaker. Operating handles for the breaker mechanisms shall be located on the enclosure outer door, with interlocks which permit the door to be opened only when circuit breakers are in the "OFF" position. An additional mechanism(s) shall be provided on the circuit breaker permitting the breaker to be operated and/or locked with the control panel door in the open position.
2. An open frame, across-the-line, NEMA rated magnetic motor starter with solid state adjustable overloads shall be furnished for each pump motor. Starters shall be designed for addition of at least two auxiliary contacts. Power contacts shall be double-break and made of cadmium oxide silver. Coils shall be epoxy molded for protection from moisture and corrosive atmospheres. The starter assembly shall be equipped with a metal mounting plate for durability. All motor starters shall be equipped to provide under-voltage release and overload protection on all three phases. Motor starter contacts and coils shall be easily replaceable without removing the motor starter from its mounted position.
3. Overload relays shall be solid-state block type, having visual trip indication with trip-free operation. Electrically resetting the overload will cause one (1) normally open and one (1) normally closed isolated alarm/control contact to reset, thus re-establishing a control circuit. Trip setting shall be governed by solid-state circuitry and adjustable current setting. Trip classes shall be 10, 15 and 20. Additional features to include phase loss protection, selectable jam/stall protection and selectable ground fault protection.
   a. An overload reset pushbutton, mounted through the control panel door, shall permit resetting the overload relay for each pump without opening the exterior door.

I. All motor branch and power circuit components shall be of highest industrial quality. The short circuit current rating of all power circuit devices shall be a tested combination or evaluated per the National Electrical Code Article 409. The lowest rated power circuit component shall be the overall control panel short circuit rating and shall not be less than the fault current available. The minimum control panel rating shall not be less than 10 kA, RMS symmetrical. Control assemblies operating at 120 volts nominal or less may be provided with transformers which limit the fault current and may be rated less than the minimum required short circuit rating.

J. Oil-tight pilot lights shall be provided as specified herein. Pilot lights furnished shall be in addition to any lights provided as a part of any automatic level controller that may be specified herein. All pilot lights shall be suitable for 120VAC, and shall be mounted in keyed openings on the inner door of the control panel. Pilot lights shall be push-to-test, shall utilize LED lamps and shall be provided with jeweled glass or plastic lenses a minimum of 30mm in diameter. A common push-to-test button for verifying the condition of pilot light lamps shall also be acceptable.

1. Individual pilot lights will be provided on the door of the control panel to alert station maintenance personnel to a “pump run”, “high stator temperature” or “seal leak” condition for each pump, plus “wetwell high level alarm” and “wetwell low level alarm”.

2. Each "pump run" light shall be wired in parallel with the related pump motor starter to indicate that the motor is (or should be) running. Running lights shall be green in color.
3. The pump control panel shall be equipped to terminate pump operation due to high motor winding temperature or moisture in the motor housing, utilizing contacts in the pump motor housing. If either event should occur, the motor starter will drop out and a "high stator temperature" or "seal fail" pilot light on the panel door shall indicate that the pump motor has been shut down. The associated circuitry for either condition shall require manual reset. High temperature and seal leak lights shall be red in color.

K. The control circuit shall be protected by a normal duty thermal-magnetic air circuit breaker which shall be connected in such a manner as to allow control power to be disconnected from all control circuits.

L. Pump mode selector switches shall be connected to permit manual start and manual stop for each pump individually, and to select automatic operation of each pump under control of the liquid level control system. Manual operation shall override the liquid level control system. Selector switches shall be heavy duty, oil-tight design, with contacts rated NEMA A300 minimum.

M. Control panel designs that utilize float switches for level sensing and control shall be provided with a separate alternating relay, as well as a lead-lag-auto selector switch mounted on the inner door of the control panel.)

1. A lag pump start delay timer shall be provided to prevent the simultaneous starting of pumps after a power failure, or if both pumps are called for by the liquid level control system.

N. Six digit elapsed time indicators (non-reset type) shall be connected to each motor starter to indicate the total running time of each pump in "hours" and "tenth of hours".

O. Dry (non-powered) contacts shall be provided to the terminal strip for connection to existing or future SCADA equipment that may not be required under this contract. Contacts provided shall be provided for each pump to indicate "pump on", "pump off", "pump high temperature", and "pump leakage alarm". Dry contacts for "high wet well level" and "Control Panel Loss of Phase" shall also be provided.
1. Monitoring contacts shall be provided for each pump located in the wet well. All contacts shall be Form B design, capable of carrying a minimum of 10 amps at 120VAC. Contact closures shall be separately wired with two separate leads in the panel, and with no common wiring between functions.

P. A 4-20mA output signal to existing or future SCADA equipment shall be provided for "wetwell level".

Q. One (1) duplex ground fault indicating utility receptacle providing 115VAC power shall be mounted on the side of the control enclosure. Receptacle circuits shall be protected by 15 ampere thermal-magnetic circuit breakers.

R. The lift station shall be equipped with NEMA 3R enclosed 5KVA auxiliary control transformer to supply 115VAC for control and auxiliary equipment. The primary and secondary side of the transformer is to be protected by a thermal magnetic circuit breaker sized to meet the power requirements of the transformer.

S. The lift station shall be equipped with 120/240V-1Phase load center with main breaker, branch circuit breakers for all 120/240V lift station equipment. The load center shall be fed from the stepdown transformer described above. An operating mechanism shall penetrate the control panel deadfront inner door for each breaker. All breakers shall be numbered and labeled (with associated circuit function), as follows:
1. Breaker(s) as required for all controls/etc. internal to panel (quantities/types as required)
2. 20A/1P for SCADA RTU/Telemetry

3. 20A/1P for Site Lighting/Receptacle
4. 20A/1P for Generator Block Heater
5. 20A/1P for Generator Battery Charger
6. A minimum of two (2) 20A/1P Spares

T. The control panel shall be equipped to monitor the incoming power and shut down the pump when required to protect the motor(s) from damage caused by voltage less than 83% of nominal. The motor(s) shall automatically restart when power conditions return to normal.

U. The control panel shall be equipped with a panel heater to minimize the effects of humidity and condensation. The heater shall include an adjustable thermostat.

V. The control panel, as furnished by the manufacturer, shall be completely wired. The contractor shall field connect the power feeder lines to the main terminal block, final connections to the remote alarm devices, and the connections between the pump and the pump motor control. All wiring, workmanship, and schematic wiring diagrams shall be in compliance with applicable standards and specifications set forth by the National Electric Code (NEC). All user serviceable wiring shall be type MTW or THW, 600 volts, and shall be color coded as follows:

- Line and load circuits, AC or DC power — Black
- AC control circuit less than line voltage — Red
- DC control circuit — Blue
- Interlock control circuit, from external source — Yellow
- Equipment grounding conductor — Green
- Current carrying ground — White
- Hot with circuit breaker open — Orange

W. Control circuit wiring inside the panel, with the exception of internal wiring of individual components, shall be 16 gauge minimum, type MTW or THW, 600 volts. Power wiring shall be 14 gauge minimum. Motor branch and other power conductors shall not be loaded above the temperature rating of the connected termination. Wires shall be clearly numbered with suitable indelible marking tape at each end, in accordance with the electrical diagrams. All wires on the sub-plate shall be bundled and tied.

X. Wires connected to components mounted on the enclosure door shall be bundled and tied in accordance with good commercial practice. Bundles shall be flexible at the hinged side of the enclosure. Adequate length and flex shall be provided to allow the door to swing to its full open position without undue stress or abrasion on the wire or insulation. Bundles shall be held in place on each side of the hinge by mechanical fastening devices.

Y. The pump control manufacturer shall provide a common ground bar mounted on the enclosure back plate. The mounting surface of the ground bar shall have any paint removed before making final connections. The contractor shall make the field connections to the main ground lug and each pump motor in accordance with the National Electric Code.

Z. A permanent corrosion resistant name plate(s) shall be attached to the control and include the following information:

- Equipment serial number
- Control panel short circuit rating
- Supply voltage, phase and frequency
- Current rating of the minimum main conductor

- Electrical wiring diagram number
- Motor horsepower and full load current
- Motor overload heater element
- Motor circuit breaker trip current rating
- Name and location of equipment manufacturer

AA. Control components shall be permanently marked using the same identification shown on the electrical diagram. Identification labels shall be mounted adjacent to the device. Switches, indicators, and instruments shall be plainly marked to indicate function, position, etc. Marking shall be mounted adjacent to and above the device.

BB. All conduit and fittings utilized in construction of the station shall be UL listed. Liquid tight flexible metal conduit shall be constructed of smooth, flexible galvanized steel core with smooth abrasion resistant, liquid tight, polyvinyl chloride cover. Conduit shall be supported in accordance with articles 346, 347, and 350 of the National Electric Code. Conduit shall be sized according to the National Electric Code.

CC. Station manufacturer shall provide a station/system (or direction to the contractor on how to install the system) to meet all applicable requirements of NEC for hazardous areas as defined by NFPA 820 (for conduit seals, explosion-proof devices where in hazardous areas, conduit types, intrinsically-safe relaying/isolation, etc.). Station design shall provide physical separation between the wetwell and the above-ground pump station control panel as required to limit the hazardous area.

2.10 LIQUID LEVEL CONTROL

A. The manufacturer of the liquid level control system shall be ISO 9001:2000 revision certified, with scope of registration including design control and service after sales activities.

B. The level control system shall start and stop the pump motors in response to sensed changes in wet well level, as set forth herein. The level control system shall utilize a submersible transducer for primary level control, but shall also be provided with backup floats.

C. The level control system shall incorporate automatic alternation to select first one pump, then the second pump to run as the lead pump for successive pump starts. Alternation shall occur at the end of a pumping cycle, or in the event of excessive run time.

D. The liquid level control system shall be model PC3000, as manufactured by Primex Controls or equal. The PC-3000 is a general purpose pump controller designed to sequence pumps on and off in response to changes in level. The primary sensor input to the controller shall be a 4-20 ma loop as provided by the submersible level transducer as specified herein. A loop power supply shall included in the PC-3000 controller to provide excitation voltage to the transducer.

E. The PC-3000 shall provide a front panel user interface for field setup and level setting adjustments. Connection to the level controller shall be made by means of a removable terminal block assembly on the back cover, facilitating replacement if necessary without the need to remove individual wires to the controller. The block assembly shall unplug directly without need of removing/disconnecting individual wires.

F. The PC-3000 shall incorporate the following features as a minimum:

1. A 32-character alpha-numeric liquid crystal display for level, status, and setpoint information. An alternation selection switch shall be provided on the front panel to enable the operator to turn alternation on, and allow the manual designation of the lead pump if alternation is off. The controller shall provide a simple menu structure for easy display and modification of pump operating setpoints and setup configuration.
2. Built in elapsed time meters shall be provided for all pumps, which shall be non-volatile and easily examined from the front panel.
3. A 4-20 ma main sensor input with loop power supply shall be included, for easy connection to the submersible level transducer, with adjustments being provided for both scale and offset as may be required. A fully-scalable 4-20 ma level output transmitter shall also be included.
4. Inputs for pump seal leak sensors and pump over temperature sensors with display messages for out of specification conditions shall be included.
5. Built-in single float backup logic shall be provided.
6. Three auxiliary inputs shall be provided, which can be used as pump-disable or pump-run confirmation inputs for a fail to start test.
7. A built-in horn relay with internal contact closures shall be provided, as well as an input for an external mute button.
8. Relay outputs for both high and low level alarms with adjustable setpoints shall be provided. These outputs shall be integrated into the pump control design to provide contact closures for the operating circuitry, as well as to provide the dry output contacts for future SCADA integration, as specified herein.
9. Individually selectable on and off setpoints for up to three pumps shall be provided, for integration into the pump control panel logic for operation as specified herein.

G. Inputs to the level controller shall be filtered and transient protected. The controller shall be provided with all required software as “built in”, and no programming shall be shall be required for proper operation. Only adjustments to level control settings shall be necessary to facilitate field setup.

H. All inputs to the level controller shall operate on low voltage/current for safety. Input power to the controller shall be 115VAC, internally fused and transient protected. As specified above, all terminal strips connecting panel wiring to/from the controller shall unplug without removing the wires for easy field replacement.

I. Level in the wet well shall be sensed by means of a submersible level transducer suspended in the wet well. The transducer shall be manufactured for years of trouble free service in the harshest applications, and shall measure the height of the liquid in the wet well above its position in the tank referenced to atmospheric pressure. The transducer shall consist of a piezoresistive sensing element, fully encased in a 316 SS housing. Superior lightning and surge protection utilizing dual arrestor technology, grounded to the case, eliminating both power supply surges and lightning ground strike transients shall be provided. A large diameter 316 SS diaphragm shall be provided for non-clogging service and damage resistance to any floating solids.

1. The transducer shall be suspended approximately 6" off the bottom of the wet well. Transducer shall be an analog device, specifically selected for the intended service, and shall be capable of providing a 4-20 milliamp level signal proportional to the sensed

liquid level in the wet well. The unit shall be sealed and non-fouling design, and shall be provided with a flush-mounted abrasion resistant 316 S.S. diaphragm.

2. The transducer shall be constructed with 316 S.S. wetted materials. Cable jacket shall be EFTE or polyurethane. Accuracy shall be +/- 0.25% of full scale, including the effects of linearity, hysteresis and repeatability, and shall be suitable for a maximum temperature of 200° F. Integral lightning and surge protection shall be provided. Diaphragm shall be protected from cuts or damage from foreign objects in the wastewater by means of a 316 S.S. plate across the bottom of the transducer, supported by 316 S.S. rods and positioned to prevent contact of trash with the diaphragm.
3. Output signal from the transducer shall be 4-20 mA, two wire design, with integral shielding and a ventilation tube to automatically compensate for changes in atmospheric pressure. Cable shall have a minimum 270-pound tensile strength. Adequate cable shall be provided to allow installation of the transducer without need for splices in the cable between the wet well and the control panel location. Extra cable length shall be neatly coiled in the bottom of the panel enclosure.
4. The transducer shall be vented to atmosphere by means of tubing contained within the included cable, and a desiccant cartridge shall be provided for installation in the control panel at the end of the cable. The filter shall block particles such as dust, dirt, and water droplets from entering the tube. Not less than two (2) spare filters shall be provided.
5. A 316 S.S. lift loop/hanger fitting shall be provided with the transducer. 316 S.S. aircraft cable (or chain) shall be used to suspend the transducer, with double clamps provided at each end. The transducer shall be suspended from a 316 S.S. hanger bracket mounted inside the wet well access cover.
6. Level transducer shall be the Dwyer Model PBLT2, or approved equal. One spare transducer shall be provided as a spare part, complete with cable length as noted above, for use by the Owner.

J. A total of four (4) backup control level float switches shall be supplied with the pump control panel, for installation by the contractor as shown on the Plans or as directed in the field. The backup control level float system shall incorporate automatic alternation to select first one pump, then the second pump to run as the lead pump for successive pump starts. Alternation shall occur at the end of a pumping cycle, or in the event of excessive run time. Each float switch shall be provided with adequate cable to reach the wetwell junction box, with 10’ coil of extra cable, without splicing. Switches shall be the direct-acting type, designed and constructed for extremely long life in severe applications. Each switch shall contain a single pole mercury switch in the normally open position, which shall close when the switch body is tilted. Switches shall be epoxy encapsulated, and the level sensors shall be impact and corrosion resistant.

1. Float switch housings shall be 316 S.S., and shall be provided with a Teflon coating to reduce the buildup of fat, oil, grease and other materials. #14/3 AWG Hypalon-jacketed Type SO cable shall be provided with each float switch, of the length as noted herein, or as necessary for installation on site. Cable shall have a minimum of 105 strands of copper in each conductor for maximum flexibility. A green ground wire shall also be included in the cable for each float switch, and shall be connected to the ground terminals in the pump control panel. Float switch contacts shall be rated for 20 amps @ 120VAC.
2. Each float switch shall be provided with the necessary hardware to enable it to be securely mounted on a 1/8" diameter 316 S.S. mounting cable. A suitable weight kit shall be attached to the bottom of the float switch suspension cable to secure both the cable and the float in the wet well, and to prevent excessive movement. The float switch connection hardware shall be adjustable to allow repositioning in the wet well as

required. The entire float assembly (weight, support cable, and all switches) shall be easily removed from the wet well for inspection, cleaning, or adjustment as required. Mounting hardware shall be included for installation of the float switches on the support cable assembly.

3. Float switches shall be Model P40NO-SST, manufactured by Anchor Scientific, Inc. or approved equal. A suitable 304 S.S. support bracket shall be provided with the wet well access cover, for securing the switch support cable at the top of the wet well. Two (2) spare float switches shall be provided for future use by the Owner.

K. An alarm silence push button and relay shall be provided to permit maintenance personnel to de-energize the audible alarm device (if provided) while any corrective actions are underway. After silencing the alarm device, manual reset of the alarm condition shall clear the alarm silence relay automatically. The pushbutton shall be oil tight design with contacts rated NEMA A300 minimum.

L. The station manufacturer will supply a 115VAC LED alarm light fixture with a vapor-tight red globe, guard, conduit box, and mounting base. The design must prevent rain water from collecting in the gasketed area of the fixture, between the base and globe. The alarm light will be shipped loose, for installation by the contractor in the location as designated by the Engineer or the Owner.

M. The alarm light circuit shall be equipped with a flasher causing the alarm light to flash. Flash rate shall be approximately 1 second (½ second on and off)..

2.11 SPARE PARTS AND EQUIPMENT

A. After installation and startup of the existing station, the pump station manufacturer shall provide the following spare parts and equipment to the Owner for use during normal operation and/or maintenance:

1. Twelve (12) oil inspection plug gaskets
2. One (1) mechanical seal for each pump model
3. One (1) complete set of all O-rings required for each pump model, in addition to the requirements of Item 1 above
4. Ten (10) oil plug inspection O-rings, in addition to the complete set of O-rings required in (3) above.
5. One (1) complete PBLT2 submersible transducer with cable.
6. Two (2) float switches of the type(s) provided.
7. Other items per Specification Section 262900 (“Manufactured Control Panels”) requirements.

B. All spare parts shall be provided packed in suitable containers for extended storage by the Owner. Any spare parts consumed during the course of equipment startup shall be replaced by the manufacturer without cost to the Owner

PART 3 - EXECUTION

3.1 EXAMINATION

A. Contractor shall off-load equipment at installation site using equipment of sufficient size and design to prevent injury or damage. Station manufacturer shall provide written instruction for proper handling. Immediately after off-loading, contractor shall inspect complete pump station and appurtenances for shipping damage or missing parts. Any damage or discrepancy shall be noted in written claim with shipper prior to accepting delivery. Validate all station serial numbers and parts lists with shipping documentation. Notify the manufacturer's representative of any unacceptable conditions noted with shipper.

3.2 INSTALLATION

A. The contractor shall install, level, align, and lubricate all equipment associated with the pump station as shown indicated on the project drawings, and as outlined in the O&M manual provided with the equipment. Installation must be in accordance with written instructions supplied by the manufacturer at time of delivery.

B. Check motor and control data plates for compatibility to site voltage. Install and test the station ground prior to connecting line voltage to station control panel.

C. Prior to applying electrical power to any motors or control equipment, check all wiring for tight connection. Verify that all protective devices (fuses and circuit breakers) conform to project design documents. Manually operate circuit breakers and switches to ensure operation without binding. Open all circuit breakers and disconnects before connecting utility power. Verify line voltage, phase sequence and ground before actual start-up.

3.3 FIELD QUALITY CONTROL

A. Operational Test

1. Prior to acceptance by Owner, an operational test of all pumps, and control systems shall be conducted to verify that the installed equipment meets the purpose and intent of these Specifications. Tests shall demonstrate that all equipment provided is electrically, mechanically, structurally, and otherwise acceptable; that it is safe and in optimum working condition; and that it conforms to the specified operating characteristics.
2. After construction debris and foreign material has been removed from the wet well, contractor shall supply clear water volume adequate to operate station through several pumping cycles. Observe and record operation of pumps, suction and discharge gage readings, ampere draw, pump controls, and liquid level controls. Check calibration of all instrumentation equipment, test manual control devices, and automatic control systems. Be alert to any undue noise, vibration or other operational problems.

B. Manufacturer’s Start-up Services

1. Coordinate station start-up with the manufacturer's technical representative. The representative or factory service technician will inspect the completed installation,

calibrate and adjust instrumentation, correct or supervise correction of defects or malfunctions, and instruct operating personnel in proper operation and maintenance procedures.

3.4 CLEANING

A. Prior to acceptance, inspect interior and exterior of pump station for dirt, splashed material or damaged paint. Clean or repair accordingly. Remove from the job site all tools, surplus materials, scrap and debris.

3.5 PROTECTION

A. The pump station should be placed into service immediately upon completion of field startup. If operation is delayed, the station shall be stored and maintained per the manufacturer's written instructions until it is ready for use.

END OF SECTION 115000

JRA PROJECT NO. 218176
Horseleg Creek Sanitary Sewer Pump Station Addition
Rome, Georgia
CLIENT JOB NO. 260519.04
BASED ON CLIENT TEMPLATE: "Insite doc.docx"
PRINTED ON: April 25, 2019

ELECTRICAL SPECIFICATION INDEX:

SECTION NO ..... SECTION DESCRIPTION
260500..... BASIC ELECTRICAL MATERIALS AND METHODS
260519..... POWER CONDUCTORS AND CABLES 51V-600V
260526..... GROUNDING
260533..... RACEWAYS
260534..... OUTLET BOXES, JUNCTION BOXES, WIREWAYS
260553..... ELECTRICAL IDENTIFICATION
262726..... WIRING DEVICES
262816..... SAFETY SWITCHES AND FUSES
262900..... MANUFACTURED CONTROL PANELS
263213..... GENERATOR SETS
263623..... AUTOMATIC TRANSFER SWITCHES
264300..... SURGE PROTECTIVE DEVICES
265000..... LIGHTING MATERIALS AND METHODS
270500..... AUXILIARY SYSTEM CABLES, 0-50V

INSITE ENGINEERING

WWW.INSITEENGINEERING.ORG

DIVISION 26/27/28 ELECTRICAL

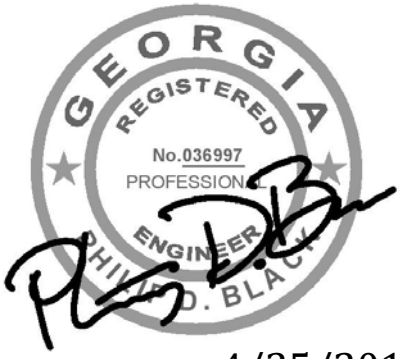

4/25/2019

SECTION 260500 - BASIC ELECTRICAL MATERIALS AND METHODS

PART 1 - GENERAL

1.1. DESCRIPTION

A. General Conditions:
   1. The accompanying General Conditions (front-end specifications) shall apply to and form a part of this section.

B. General Requirements:
   1. Carefully examine General Conditions, other specification sections, and other drawings (in addition to Electrical) in order to be fully acquainted with their effect on electrical work.
   2. Do all work in compliance with all applicable codes, laws, and ordinances, the National Electrical Safety Code, the National Electrical Code (hereinafter referred to as "Code"), applicable energy codes, and the regulations of the local utility companies. Obtain and pay for any and all required permits, inspections, certificates of inspections and approval, and the like.
   3. Cooperate with other trades and contractors at job. Perform work in such manner and at such times as not to delay work of other trades. Complete all work as soon as the structure and installations of equipment will permit. Patch, in a satisfactory manner and by the proper craft, any work damaged by electrical workmen.
   4. The Owner shall be provided access to all software to include copies of software for all systems provided under this division of the specifications. Software shall be password protected where applicable.
   5. Only qualified electrical sub-contractors will be allowed to submit proposals for this project. In order to be considered qualified, contractor shall have completed a minimum of five (5) projects of similar type/scope and equal or greater magnitude and complexity within the last ten (10) years. Sub-contractors without qualifications will be rejected. If desired, potential electrical sub-contractors may submit qualification evidence for review and pre-bid approval a minimum of ten (10) days prior to bid. Previous projects used to meet this experience requirement must have included similar (or greater) scopes of work for each of the following areas:
      a. Power Systems.
      b. Control Systems.
      c. Instrumentation Systems.
   6. Electrical contracting firm shall be licensed as an electrical contractor in the state where work will be performed

1.2. GENERAL SCOPE OF ELECTRICAL WORK (REFER TO DRAWINGS FOR OTHER SPECIFIC SCOPE ITEMS)

A. Furnish all labor and materials to complete electrical work as shown on drawings and/or herein specified.

B. Remove all existing electrical equipment and wiring made obsolete by this project and remove or relocate all electrical services located on or crossing through the project property, either above or below grade, which would obstruct the construction of the project or conflict in any manner with the completed project or any code pertaining thereto. Dispose of salvageable materials as directed by the Engineer. Contractor shall schedule meeting to review scope of electrical demolition and to confirm scope and phasing of proposed demolition with the owner in the presence of the prime consultant prior to start of any electrical demolition.

C. Furnish and install complete power, telephone and other electrical services as shown on drawings and/or specified herein.

D. Pay all electrical utility company service charges (if any) in connection therewith, including permanent meter deposit. Meter deposits will be refunded to Contractor at time of Owner's acceptance.

E. Furnish and install complete power distribution system as shown on drawings and/or specified herein.

F. Furnish and install a complete Power Generation and Automatic Transfer Switch System as shown on drawings and/or specified herein.

G. Furnish and install disconnect switches for motors as shown on drawings and/or specified herein.

H. Furnish and install complete electrical grounding systems as shown on drawings and/or specified herein.

I. Install and connect electrical equipment mentioned in Division 26/27/28 Specifications or noted in drawings, whether furnished by electrical contractor or by others.
   1. Where shown or specified, equipment furnished by others shall be installed and connected under this Contract.
   2. Where shown or specified, Contractor shall receive, unpack, check and assume custody of equipment furnished by Others. Contractor shall assume responsibility for care and safekeeping of this equipment, when delivered into his custody. He shall protect it from moisture, dust and damage during construction and until Owner acceptance of project.

J. Furnish and install complete electrical lighting systems as shown on drawings and/or specified herein.

K. Furnish and install all electrical items shown on drawings and/or herein specified, unless shown or specified otherwise.

L. Furnish and install complete telephone/data raceway (including all outlet boxes, face plates, conduit raceways, telephone backboards, terminal cabinets, etc.) system as shown on drawings and/or specified herein.

M. Furnish and install a complete Surge Protection System as shown on drawings and/or specified herein.

N. Procure and pay for permits and certificates as required by local and state ordinances and fire underwriter's certificate of inspection.

O. Balance loads as equally as practicable on services, distribution feeders, circuits and buses. Provide typewritten directory for each panel.

P. Unless specifically indicated or required otherwise, terminate all circuitry/cabling provided within this contract at associated equipment/devices/etc. in accordance with all applicable codes, standards and supplier requirements, whether associated equipment/device/etc. is furnished within this contract or by others.

Q. Complete field testing, adjustment & startup of all systems listed above as shown on drawings and/or specified herein.

PART 2 - PRODUCTS

2.1. APPROVED MATERIALS AND DEVICES

A. Where not otherwise specified, provide only new, standard, first-grade materials/systems throughout, conforming to standards established by Underwriter's Laboratories, Inc., and so marked or labeled, together with manufacturer's brand or trademark. All equipment/systems subject to approval of Engineer before installation. All like items and associated equipment/systems shall be of one manufacturer.

B. To insure proper coordination, it is intended that all electrical equipment and materials specified in Division 26/27/28 of these specifications and shown on the electrical drawings be furnished and installed by the electrical sub-contractor. It will not be permissible for any of these items to be furnished directly by the general contractor without the electrical contractor's coordination.

C. To insure commonality of spare parts, it is required that the electrical contractor provide the same brand for all circuit breakers, starters, power equipment, etc. provided under the following divisions of these specifications:

2.2. SUBMITTALS

A. All submittals to the design team shall be accompanied by a letter summarizing all proposed deviations from specified products or pre-approved substitutions. The absence of such a letter shall be understood to indicate that the contractor intends to meet all contract requirements, regardless of cut-sheets/data-sheets provided within the submittal.

B. Submit to Engineer ten (10) days prior to bid date three (3) copies of any items and/or manufacturers which are proposed as substitutes for those specified.

C. Submit to Engineer promptly after award of Contract and prior to purchasing, the number of copies required by the contract. All drawings of a specific item or system shall be made in one submittal, and within thirty (30) days after award of Contract. Shop drawings of all power equipment shall contain exact details of device placement, phasing and numbering, in form of elevations, for each major piece of equipment. Shop drawings shall be submitted on the

following:

1. SECTION 262816: SAFETY SWITCHES AND FUSES
2. SECTION 262900: MANUFACTURED CONTROL PANELS
3. SECTION 263213: GENERATOR SETS
4. SECTION 263623: AUTOMATIC TRANSFER SWITCHES
5. SECTION 264300: SURGE PROTECTIVE DEVICES
6. SECTION 265000: LIGHTING MATERIALS AND METHODS
7. ALL POWER DISTRIBUTION EQUIPMENT (i.e. SWITCHBOARDS, PANELBOARDS, DRY TYPE TRANSFORMER, ETC.)
8. ALL ELECTRICAL PLATFORM LAYOUTS - Submittals shall include to-scale sketches of the proposed electrical platform layouts indicating all panelboards, transformers, equipment racks, control panels, generators, transfer switches, meters, etc.. Layouts shall show that each piece of electrical equipment has the clearances, working space and dedicated equipment space required by applicable codes. No conduits to equipment within these rooms shall be installed until submittals have been provided and returned without exception by the design team.
9. ALL CONTROL ITEMS & SYSTEMS

D. The contractor shall fully review, comment upon and correct all shop drawings as required to assure compliance with contract documents prior to submittal to Engineer. The failure of the contractor to properly review and correct shop drawings prior to submittal will result in rejection of shop drawings by the engineer. Review by the Engineer will be for general conformance with contract documents. The contractor shall be fully responsible for correctness of all submitted dimensions, details, quantities and locations.

E. None of the above items shall be installed until shop drawings or catalog data have been reviewed by Engineer without rejection or required resubmittal. Any listed item not submitted, even if specified, shall be considered not acceptable and shall be removed if directed.

F. Any required resubmittal will be reviewed by the Engineer for conformance with previously issued comments only. The contractor shall be responsible for verifying that all items not specifically requiring resubmittal have not been altered from the previously reviewed submittal.

G. Material proposed for substitution shall be of the same quality, perform the same functions, conform to such physical dimensions and appearance as are required by the Engineer. All material proposed for substitution is subject to the approval of the Engineer and his authority for approval is final. No material proposed for substitution will be considered unless all submittal data complies with the drawings and specifications of Section 16 as to time of submission, number of copies of submittal, and detail requirements.

H. Samples of material shall be furnished where required by drawings or Division 26/27/28 Specification, or as requested by the Engineer on items proposed as substitutes.

I. Submit to Engineer a certificate of final inspection from local inspection department.

PART 3 - EXECUTION

3.1. SITE VISIT

A. The Contractor shall visit the site to determine existing dimensions and conditions affecting electrical work. Failure to do so in no way relieves Contractor of his responsibility under Contract.

3.2. CLEARANCE WITH UTILITIES

A. It shall be the responsibility of this Contractor, prior to bid, to reaffirm with the utility companies involved, that the locations, arrangement (and with power company voltage, phase, and metering required) and connections to utility service are in accordance with their regulations and requirements. If their requirements are at variance with these drawings and specifications, the Contract price shall include any additional cost necessary to meet those requirements without extra cost to Owner after a contract is entered into.

B. On many projects the utility company may levy charges due to locations, size or type service involved. The Contractor shall be responsible for these charges (including permanent meter deposit), unless such charges are not available prior to bid and Contractor so documents as described below. The meter deposit will be refunded to the contractor at time of Owner's acceptance.

C. Should above cost not be available, prior to bid, Contractor must submit a letter signed by a responsible utility company person so stating with his bid and in turn must be submitted by Prime Contractor with his bid to Owner. The cost will then be deleted from the Contract and become responsibility of the Owner.

D. Arrange with utility companies for such services as shown or herein specified and installation of meter where shown. Furnish with shop drawings a signed document from utility companies describing the location and type of services to be furnished and any requirements they may have. This document shall be signed for each utility company by a person responsible for granting such service.

3.3. WORKMANSHIP

A. All work shall be in accordance with the latest editions of NFPA 70 (National Electrical Code), NFPA 101 (Life Safety Code), National Electric Safety Code, International Building Code, applicable NECA standards and the rules and regulations of State and Local Authorities Having Jurisdiction.

B. All work shall be executed in a workmanlike manner and shall present a neat and mechanical appearance upon completion.

C. All equipment, devices, etc. shall be installed in accordance with manufacturer's recommendations.

D. All items shall be installed straight and plumb in a workmanlike manner and care shall be exercised so that like items are mounted the same position, heights and general location.

E. Keep site clean of accumulation of cartons, trash and debris.

3.4. SAFETY

A. The contractor is solely responsible for all job safety. Engineer assumes no responsibility for job safety. Maximum consideration shall be given to job safety and only such methods as will reasonably insure the safety of all persons shall be employed. The codes and regulations of OSHA shall be given strict compliance as well as such other codes, laws, and regulations as may be applicable.

3.5. CONTRACT DOCUMENTS

A. Contract documents indicate diagrammatically, extent, general character and approximate location of work. Where work is indicated but minor details omitted, furnish and install it complete so as to perform its intended functions. For details and mechanical equipment, follow drawings provided by other disciplines (Architectural, Mechanical, Structural, Civil, etc.) and fit electrical work thereto.

B. Contract documents consist only of the hardcopy documents issued by the Prime Engineer. Electronic documents issued directly by the electrical engineer to the contractor and/or its sub-contractors/vendors are issued for convenience only (electronic documents are not formal contract documents).

C. If the contractor and/or one of its suppliers require a one-time transfer of electronic files of the current electrical construction documents to prepare shop drawings (or for another similar purpose), it shall:
   1. Sign a waiver prepared by the electrical engineer prior to the transmittal of these files.
   2. Agree to pay the electrical engineer a fee of $50.00 per drawing, up to a maximum of $400 per transfer, payable upon receipt of the files.
   3. To the fullest extent permitted by law, indemnify, hold harmless, and defend JRA from all claims, damages, losses and expenses, including attorneys' fees arising out of or resulting from the use of the CAD files.

D. Take finish dimensions at job in preference to scaled dimensions.

E. Except as above noted, make no changes in or deviations from work as shown or specified except on written order of Engineer.

3.6. UNDERGROUND UTILITY/EQUIPMENT COORDINATION

A. Prior to commencement of work, verify exact locations of all existing or proposed underground utilities and/or underground equipment and verify that proposed electrical installation does not conflict with these items. Notify Engineer immediately if any conflict is found.

3.7. EQUIPMENT STORAGE

A. Store all electrical equipment in dry, covered locations as directed by equipment manufacturers. Contractor shall be responsible for replacing or repairing improperly-storted equipment as directed by Engineer.

3.8. EXCAVATION, CUTTING AND PATCHING

A. Perform all cutting and excavating as necessary for installation of electrical systems, unless specifically covered under another section. After Engineer's observation, complete all excavation, filling and backfilling as directed under specifications for preparation of site and earthwork. Foundations for equipment shall be as specified under concrete section. Concrete pads shall be minimum of 6" thick; unless greater thickness required by equipment manufacturer. Obtain specific approval of Engineer before cutting into any structural members.

B. For all such work employ competent workmen, and finish up in neat and workmanlike manner, equal to quality and appearance to adjacent work.

3.9. PENETRATIONS

A. All penetrations in water tight barriers shall be made so that barrier rating is not compromised. Furnish roof flashing for all equipment installed under Division 26/27/28 that penetrates through the roof. Appropriate flashing is specified under roofing and sheet metal section. Supply these flashings for installation under roofing and sheet metal section.

B. All fire/smoke barrier penetrations shall be made in accordance with a U.L. listed assembly to maintain the fire/smoke rating of the associated membrane.

C. Where penetrations are required through structural elements, verify penetration locations and sizes with structural engineer. In no case shall the structural integrity be compromised without written approval from structural engineer.

3.10. INSTALLATION OF EQUIPMENT - GENERAL

A. Care shall be exercised in exact routing and location of all items so as not to obstruct access to equipment, personnel walkways, or expose it to potential mechanical damage.

B. Items shall be securely anchored and/or fastened. All construction shall meet the seismic design requirements of the building code. Items (especially transformers, light fixtures, equipment racks, freestanding gear, etc.) installed in seismic zones C, D, E or F shall be supported and braced per applicable codes and standards.

C. All wall, pole or frame-mounted electrical equipment shall be mounted to metal unistrut (or similar) frames of same material as electrical equipment. For example, pole-mounted stainless steel disconnect switches shall be mounted to stainless steel unistrut frames.

D. All electrical equipment, furnished by Contractor or by others shall be covered and protected during construction.

E. All control cabinets, panels, motor control centers and other electrical cabinets and enclosures shall have all trash removed and be vacuumed clean. All foreign paint, etc., shall be removed from exterior and all scratches in finish touched up with same color and material as original. Any rusted areas shall be sanded, primed and repainted.

F. All relays, starters, push-button and other control devices shall be cleaned and if necessary, lubricated with CRC 2-26 to assure free operation.

3.11. MOTORS, STARTERS AND CONTROLS

A. Unless otherwise specified or shown, all motors will be furnished and installed under other sections of this specification.

B. Electrical Contractor shall install all starters and all electrical power wiring and connections to motors and starters.

C. Unless otherwise specified or shown, all control items for motors shall be furnished, installed and wired in conduit by the electrician.

3.12. CIRCUITS AND BRANCH CIRCUITS

A. Outlets shall be connected to branch circuits as indicated on drawings by circuit numbers. No more outlets than are indicated shall be connected to a circuit.

B. Branch circuit homeruns shall be installed as shown on drawings. Multiple homerun conduits shall not be combined by contractor into larger, single homerun conduits unless specific permission is granted by the Engineer.

3.13. LUG/TERMINAL RATINGS

A. All lug/terminal ratings, sizes, locations, types, etc. shall be coordinated with the associated conductor sizes, types, routings, etc. by the contractor.

B. All lugs/terminals/etc. shall be rated for 75 degree C terminations (minimum, unless specified otherwise).

3.14. EQUIPMENT FAULT CURRENT RATINGS

A. All equipment and breakers shall meet the minimum RMS symmetrical interrupting capacity ratings shown on plans for the associated distribution equipment. All interrupting ratings shall be full ratings. Where new devices or breakers are added to existing distribution equipment, the new devices/breakers shall have interrupting ratings matching or exceeding that of the existing distribution equipment.

3.15. OUTLET LOCATION

A. Symbols shown on drawings and mounting heights indicated on drawings and in specifications are approximate only. The exact locations and mounting height must be determined on the job and it shall be the Contractor's responsibility to coordinate with other trades to insure correct installation.

3.16. IDENTIFICATION

A. Each panel shall have each circuit identified. Panels without branch circuit nameplates shall have typewritten directories.

B. Each individually mounted switch, circuit breaker, starter and/or any other control or protective

device shall identify equipment fed and fuse size, if any, by engraved plastic nameplate, white with black letters, screw attached.

C. See Specification Section 260553 for additional requirements.

3.17. GROUNDING

A. All equipment shall be grounded and bonded in accordance with all state/local regulations, The National Electrical Code and as specified herein.

3.18. TELEPHONE WORK

A. Provide telephone raceways, outlets and backboards, as shown. Provide additional work as shown on drawings. Bond all raceways together at backboards and provide No. 6 ground wire extending from raceway bonds to cold water pipe, in 1/2 inch raceway. Carefully ream ends of all raceways.

3.19. PAINTING

A. Refer to Painting/Finishing specifications for requirements regarding field painting of exposed conduit. Any scratches, dents or rust spots in conduit electrical enclosures, panels, motor control or any other electrical items shall have the dents removed, and they, along with any rust spots or scratches, sanded and touched up with the same exact color paint as original finish.

3.20. ACCEPTANCE TESTING

A. Upon completion of work, the entire electrical system installed within this project shall be tested and shall be shown to be in perfect working condition, in accordance with the intent of the specifications and drawings. It shall be the responsibility of the Electrical Contractor to have all systems ready for operation and to have an electrician available to operate same in accordance with and under the supervision of the observation representative(s) of the Engineer. The Electrician shall be available to assist in removal of panel fronts, etc., to permit inspection as required.

B. The electrical sub-contractor shall include in bid price start-up assistance and training from a certified representative of the manufacturer for the following systems:
   1. SECTION 263213: GENERATOR SETS
   2. SECTION 263623: AUTOMATIC TRANSFER SWITCHES

3.21. OPERATION AND MAINTENANCE DATA

A. One set of marked “AS BUILT” drawings, three (3) sets of all equipment catalog and maintenance data and three (3) sets of all final shop drawings, on all equipment requiring same shall be turned over to owner. These items shall be bound in hard back book. Contractor shall explain and demonstrate all systems to Owner’s representative.

3.22. GUARANTY-WARRANTY

A. Furnish a written Guarantee-Warranty, countersigned and guaranteed by General Contractor,

stating:

1. That all work executed under this section will be free from defects of workmanship and materials for a period of one (1) year from date of final acceptance of this work.
2. Above parties further agree that they will, at their own expense, repair and replace all such defective work, and all other work damaged thereby, which becomes defective during the term of the Guaranty-Warranty.

END OF SECTION 260500

SECTION 260519 - POWER CONDUCTORS AND CABLES 51V-600V

PART 1 - GENERAL

1.1. DESCRIPTION

A. Power Wires and Cables

B. Low Voltage Wires and Cables

PART 2 - PRODUCTS

2.1. POWER WIRES AND CABLES - 600 VOLT

A. General: Conductors shall have current carrying capacities as per N.E.C. and with 600 volt insulation, #12 minimum except for controls and fixture wire. Conductors shall be copper.

B. General Application (see below for exceptions):
1. At or Below Grade (including within slab-on-grade):
   a. #8 or larger conductors:
      1) XHHW or RHH/RHW/USE stranded (in conduit).
   b. #10 or smaller conductors for circuits terminating at motors:
      1) THHN/THWN or XHHW stranded (in conduit).
   c. #10 or smaller conductors (excluding circuits terminating at motors):
      1) THHN/THWN or XHHW solid (in conduit).
2. Above Grade:
   a. #8 or larger conductors:
      1) THHN/THWN, XHHW or RHH/RHW/USE stranded (in conduit).
   b. #10 or smaller conductors for circuits terminating at motors:
      1) THHN/THWN, XHHW or RHH/RHW/USE stranded (in conduit).
   c. #10 or smaller conductors (excluding circuits terminating at motors):
      1) THHN/THWN, XHHW or RHH/RHW/USE solid (in conduit).
3. Power Wire and cable shall be as manufactured by Southwire, Rome, American Insulated Wire, Okonite, Phelps-Dodge, Amercable, Aetna or approved equal.

C. Class 1 Control Cabling (120VAC Control Circuits, Etc.)
1. Unless specified otherwise, Class 1 control cabling shall:
   a. Be rated for exposed cable tray installation.
   b. Be plenum rated (Class 1 Control cabling and Instrumentation cabling installed in conduit or exposed in cable tray in non-plenum areas is not required to be plenum-rated).
   c. Be UL-rated for the proposed application.
   d. Be multi-conductor with overall outer sheath as required by the application. The insulation of each conductor within the overall multi-conductor cable shall be uniquely color-coded. Ground conductors (when provided) within the multi-conductor cable shall have green insulation. Conductors with green insulation shall not be used for conductors other than ground.

e. Utilize copper conductors.
f. Have wire gauge as required to limit voltage drop to acceptable limits determined by the system supplier and to meet all applicable code requirements.
g. Where installed underground, within slab-on-grade or in exterior locations, be rated for wet locations.
h. Where required for specific systems, meet the specific requirements (conductor quantity, wire gauge, insulation type, shielding, etc.) of the system supplier.
i. Be rated for 600V.
j. Be industrial grade.
k. Have stranded conductors.
l. Have sunlight/oil-resistant PVC/Nylon insulation and jacket with ripcord.

2. Control cabling shall be as manufactured by Belden, AlphaWire or General Cable.

D. Fixture Wiring
1. Conductor Types:
a. Type TFFN or XFF.
2. Minimum Sizes:
a. For fixtures up to 300 watts: #16.
b. For fixtures over 300 watts up to 1500 watts: #14.
c. For fixtures over 1500 watts: as required.
d. Conductors to concrete pour fixtures: #12.
3. Fixture wire shall extend only from fixture to first junction, and not over 6 feet, except for concrete pour units.

2.2. WIRE CONNECTIONS:

A. All connector types:
1. Shall be properly rated for the proposed application by UL and per the manufacturer.

B. At Motor Connections (within motor terminal boxes):
1. On Unshielded Wire:
a. Single conductor per phase: shall be made with insulated set screw connectors or 3M 5300 Series 1kV Motor Lead Connections kits with mechanical lugs as required.
b. Multiple conductors per phase: shall be made with insulated mechanical lugs, rated for the associated motor cable types, by Polaris or Ilsco.
2. On Shielded Power Wire:
a. The braided shields and internal grounding conductors of shielded power (not instrumentation) cables shall be grounded at BOTH ends (at VFD/starter and at motor) with a termination kit provided by the cable supplier. This termination kit shall include a connection ring that makes contact around the full circumference of the braided shield, and connects all internal grounds to a common external ground point.

C. Other Dry locations:
1. On Wire larger than #10: shall be made with solderless, non-insulated compression-type connectors meeting requirements of Federal Specification WS-610e for Type II, Class 2

and shall be covered with Scotch #33 electrical tape so that insulation is equal to 150% of conductor insulation.

2. On Wire #10 and smaller: shall be made with one of the following:
   a. Ideal Wing Nuts or equal by 3M .
   b. Ideal Push-In Wire Connectors (for #12 and smaller only).

D. Other Wet/Damp locations:
   1. On Wire larger than #10: shall be made with underground/direct-burial, waterproof rated EPDM or TPE-insulated connectors by Ilsco, Burndy or T&B.
   2. On Wire #10 and smaller: shall be made with one of the following:
      a. Ideal Weatherproof or Underground Wire Connectors pre-filled with 100% silicone sealant as required by the application.

PART 3 - EXECUTION

3.1. GENERAL INSTALLATION

A. All wires and cables shall be installed in conduit unless specifically noted otherwise.

B. All joints and splices on wire shall be made with solderless connectors, and covered so that insulation is equal to conductor insulation.

C. No splices shall be pulled into conduit.

D. No conductor shall be pulled until conduit is cleaned of all foreign matter.

E. Wire and cable shall be neatly formed, bundled and tied in all panelboards, wireways, disconnect switches, pullboxes, junction boxes, cabinets and other similar electrical enclosures.

F. All wires and cables installed in underground or other wet locations shall be rated by the manufacturer for wet locations.

G. Network cabling shall be continuous from endpoint to endpoint and shall not be spliced unless specifically noted otherwise.

3.2. POWER WIRE AND CABLE INSTALLATION:

A. No power conductor shall be smaller than #12 except where so designated on the drawings or hereinafter specified.

B. Multi-wire lighting branches shall be used as indicated.

C. Where more than three current-carrying conductors are installed in a single raceway or cable, conductors shall be derated as indicated in NEC Table 310.15(B)(3)(a).

D. Raceways/cables shall generally not be installed exposed to sunlight on roofs unless specifically required. Where raceways or cables are installed exposed to sunlight on roofs, conductors shall be derated with ampacities adjusted per NEC Table 310.15(B)(3)(c).

E. In installing parallel power conductors, it is mandatory that all conductors making up the feeder be exactly the same length, the same size, the same type of conductor with the same insulation. Each group of conductors making up a phase or neutral must be bonded at both ends in an approved manner.

F. In installing overhead main power services, a minimum of 5'-0" of cable per run shall be extended beyond the weatherhead(s) for connection to service drop. Confirm exact requirements with local utility company.

3.3. WIRE CONNECTIONS

A. See Part 2 above for material types.

B. Aluminum Wire Connections:
   1. Where aluminum wiring is allowed, connections shall utilize compression fittings, no exceptions (Anderson Versa Crimp or equal).

C. Any stranded wire connection to wiring devices shall be made with crimp type terminals.

D. All electrical connections and terminals shall be tightened according to manufacturer's published torque-tightening values with calibrated torque wrenches as required to clearly indicate final torque value to the contractor. Where manufacturer's torque values are not provided, those specified in UL 486A & 486B shall be used.

E. All connections and connector types shall be installed in strict compliance with all requirements of the connector manufacturer.

F. Under no condition shall the specified conductors be connected to terminals rated less than 75°C. Where conductors sized #1 or smaller are shown to be terminated at equipment and the terminals of that equipment are rated for less than 75°C, contractor shall install junction box near equipment to capture the specified conductors, splice with compression connections (rated for a least 75°C) and extend conductors with ampacity rating as required by NEC (based on terminal temperature rating) to equipment terminals. The length of the conductors to be terminated shall be as directed by the AHJ but not less than 48 inches.

3.4. SHIELDED CABLE INSTALLATION

A. Shielded instrumentation (low voltage) cables:
   1. The outer foil of shielded instrumentation cables shall be grounded at the PLC/control panel end only (not at the field device end) with a termination kit as directed by the PLC/control panel supplier.

3.5. LOW VOLTAGE (LESS THAN 50V) CONTROL AND NETWORK CABLE INSTALLATION:

A. All wires and cables shall be installed in conduit unless specifically noted otherwise. Low voltage control and/or network cabling located within concealed, accessible ceiling spaces (such as above lay-in ceilings) may be run without conduit if the following requirements are met:

1. Cabling shall be plenum-rated, multi-conductor.
2. Cabling shall be supported by cable tray or with J-hook supports on intervals not to exceed 5'-0" on center. Cabling shall be supported solely from the cable tray or j-hooks supported from the building structure, without using piping, ductwork, conduit or other items as supports.
3. Cabling shall be properly bundled with plenum-rated Velcro straps on intervals not to exceed 30" on center.
4. Properly-sized conduit(s) shall be provided wherever cabling enters an inaccessible or exposed area (such as above gyp board ceilings or through walls). End bushings shall be provided on both ends of all raceway terminations. All fire/smoke barrier penetrations shall be made in accordance with a U.L. listed assembly.

3.6. CIRCUITS AND BRANCH CIRCUITS

A. Outlets shall be connected to branch circuits as indicated on drawings by circuit number adjacent to outlet symbols, and no more outlets than are indicated shall be connected to a circuit.

3.7. LABELING AND COLOR CODING OF WIRE AND CABLE

A. Refer to Specification Section 260553 for all labeling requirements.

B. A color coding system as listed below shall be followed throughout the network of branch power circuits as follows:

PHASE	120/208/240/ COLOR	120/240 HIGH LEG DELTA COLOR	277/480 VOLT COLOR
A	BLACK	BLACK	BROWN
B	RED	ORANGE (FOR HI-LEG)	ORANGE
C	BLUE	BLUE	YELLOW
NEUTRAL	WHITE	WHITE	GRAY
GROUND	GREEN	GREEN	GREEN

C. Where dedicated neutrals are installed for multi-wire branch circuits, the neutral conductors shall be color coded as follows:

PHASE	120/208/240/ COLOR	120/240 HIGH LEG DELTA COLOR	277/480 VOLT COLOR
NEUTRAL A	WHITE W/ BLACK TRACER	WHITE W/ BLACK TRACER	GRAY W/ BROWN TRACER
NEUTRAL B	WHITE W/ RED TRACER	WHITE W/ ORANGE TRACER (FOR HI-LEG NEUTRAL)	GRAY W/ ORANGE TRACER
NEUTRAL C	WHITE W/ BLUE TRACER	WHITE W/ BLUE TRACER	GRAY W/ YELLOW TRACER

D. Control Conductors: Shall be color coded by use of colored "tracers". No control circuit shall contain two identical conductors. For example, a set of five (5) control conductors for a pushbutton station represents one (1) control circuit which would require five (5) uniquely-colored control conductors.

3.8. TESTING

A. The insulation resistance of all feeder conductors (feeding electrical distribution equipment such as switchboards, panelboards, transfer switches, transformers, etc.) shall be tested at the load side of the feeder breaker with a 500-volt DC Megger Tester. Any feeder conductor with an insulation resistance less than 1 Mega ohm to ground shall be replaced by the contractor at the contractor's expense. All final test results shall be clearly documented (with date, time, feeder, results, test equipment, etc.), and the final test results shall be submitted to the design team for review.

END OF SECTION 260519

SECTION 260526 - GROUNDING

PART 1 - GENERAL

1.1. GENERAL

A. THE WORK UNDER THIS SECTION INCLUDES BUT IS NOT LIMITED TO GROUNDING OF THE FOLLOWING:
   1. Service Equipment.
   2. Transformers.
   3. Non-current carrying conductive surfaces of equipment.
   4. Metal Buildings.
   5. Structures.
   6. Other Equipment.

1.2. GENERAL REQUIREMENTS

A. All equipment, building steel, and main service shall be effectively and permanently grounded with a conductor cross section as required by the National Electrical Code and of capacity sufficient to insure continued effectiveness of the ground connections for fault current. Ground conductors shall be as short and straight as possible, protected from mechanical injury and, if practicable, without splice or joint.

B. All grounding connections shall be installed in accordance with the National Electrical Code and all local codes and requirements. Such codes shall be considered minimum requirements and the installation of the grounding system shall insure freedom from dangerous shock voltage exposure and provide a low impedance ground fault path to permit proper operation of overcurrent and ground fault protective devices.

PART 2 - PRODUCTS

2.1. CONDUCTORS

A. All grounding conductors shall be insulated with green colored, 600 volt insulation unless noted otherwise.

B. Motors having power supplied by single conductor wire in conduit shall be grounded through the conduit system. Flexible conduit shall be “jumpered” by an appropriate bonding conductor.

C. Supplemental grounding system conductors shall be bare, softdrawn, stranded, single conductor copper wire, and generally sized as follows (unless shown otherwise on plans):
   1. Switchgear, motor control centers, and power transformer #4/0 minimum or as shown on plans.
   2. Power panels, #2/0.
   3. Control panels and consoles, #4.
   4. Process Motors, #1/0.

5. Building Columns, #4/0.
6. Light Poles, #2.
7. Telephone Backboard & Cabinet ground busses, #2.

2.2. GROUNDING ELECTRODES

A. Grounding electrodes shall be copper-clad steel rods 3/4 inch in diameter and ten feet long. Where longer electrodes are necessary to reduce the ground resistance, Contractor shall provide sectional rods, connectors, drive heads, etc.

2.3. CONNECTIONS

A. All conductor-to-conductor, conductor-to-ground rod, conductor-to-structure, conductor-to-fence connections of #6 and larger sized conductors and underground ground connections shall be permanent exothermic welded connections (Cadweld or equal) unless otherwise noted on applicable drawings.

B. Connections to equipment shall be by bolted compression type lugs (except for motors). When the conductor is #6 and larger, the lug shall be joined to the conductor by an exothermic weld (Cadweld or equal).

C. Motors to be grounded by the grounding conductors run with the power conductors shall have a split-post grounding stud installed in the connection box.

D. Each cast pull box or junction box shall have a ground lug, connected to largest ground conductor to enter box.

E. Ground connections at conduit terminations shall be made by approved grounding bushings (see Raceways Specification Section for additional requirements).

2.4. MANUFACTURERS

A. Conduit clamps and connectors shall be manufactured by Raco, OZ., or Ercon.

B. Lugs shall be as manufactured by Square “D”, Burndy, or T and B.

C. Exothermic weld connections shall be as manufactured by Cadweld, or approved equal.

D. Ground rods shall be as manufactured by Joslyn or McGraw Edison.

E. Split post grounding shall be as manufactured by Burndy or T and B.

PART 3 - EXECUTION

3.1. MAIN SERVICE GROUND

A. The main service grounding electrode system shall consist of the following items bonded together by the grounding electrode conductor:
1. The main underground cold water pipe (metal).

2. The metal frame of the building.
3. Driven ground rods. Ground rods shall be embedded at the lowest point in the building and below the permanent moisture level. Ground rods shall be spaced a minimum of ten (10) feet apart and connected in parallel until resistance to ground does not exceed five (5) ohms.

B. The grounding electrode system shall be connected to the grounded conductor (neutral) on the supply side of the service disconnecting means by a grounding electrode conductor not smaller than that shown in Table 250.66 of the N.E.C. The main service equipment grounding conductor shall be connected to the grounding conductor on the supply side of the service disconnecting means in accordance with Table 250.122 of the N.E.C. for the ampere rating of the service entrance equipment. Where in a service entrance switchboard, the equipment grounding conductor shall not be less than 25% of the main bus rating. These connections shall be made inside the service entrance equipment enclosure.

3.2. TRANSFORMER GROUNDS

A. Dry type insulation transformers with a grounded conductor in the secondary shall be grounded in accordance with N.E.C. Section 250-26.

3.3. EXPOSED NON-CURRENT-CARRYING METAL PARTS

A. General: Ground connections to equipment or devices shall be made as close to the current carrying parts as possible, that is, to the main frame rather than supporting structures, bases or shields. Grounding connections shall be made only to dry surfaces that are clean and dry. Steel surfaces shall be ground or filed to remove all scales, rust, grease, and dirt. Copper and galvanized steel shall be cleaned to remove oxide before making welds or connections. Code size ground conductors shall be run in all power conduits and properly terminated at each end.

B. Motors: Exposed non-current-carrying metal parts, shall be grounded by a grounding conductor either run with power conductors, and/or separate grounding conductors. Drawings will show method(s) to be used. The ground conductors with all motor conductors shall be connected to the ground buss in the motor connection box. Jumper connections shall be installed between frames and rigid conduit for equipment having flexible conduit connections (sealtight). All AC motor grounds shall provide a low impedance path to ground. Connections from the supplemental grounding system (when specified) shall be made directly to the motor frame. Additionally, utilization equipment connected to the motor (pump, fan, mixer, etc.) shall be bonded to the motor with flexible braid-type bonding strap to ensure equalization of ground potentials.

C. Raceways & boxes: All raceways, conduits, armored or shielded cable and all exposed non-current carrying metal parts shall be grounded. Such items shall be bonded together and permanently grounded to the equipment ground buss. Metallic conduits shall be connected by grounding or clamps to ground buss. Flexible “jumpers” shall be provided around all raceway expansion joints. Bonding straps for steel conduit shall be copper. Jumper connections shall be provided to effectively ground all sections or rigid conduit connected into plastic pipe. No metallic conduit shall be left ungrounded. In conduit systems interrupted by junction or switch boxes where locknuts and bushings are used to secure the conduit in the box, the sections of

conduit and box must be bonded together. If conduit, couplings or fittings have a protective coating or non-conductive material, such as enamel, such coating must be thoroughly removed from threads of both couplings and conduit and the surface of conduit or fitting where the ground clamp is secured.

D. Enclosures: Metal conduits entering free standing motor control centers, switchboards or other free standing equipment shall be grounded by bare conductors and approved clamp. Any conduits entering low voltage (480 volts or below) equipment through sheet metal enclosure and effectively grounded to enclosure by double locknut or hub need not be otherwise bonded.

E. Equipment: In addition to equipment grounding provisions mandated by code requirements, additional equipment grounding provisions (including local ground rods, connections, etc.) shall be provided by the contractor as directed by equipment suppliers.

F. Both ends of ground busses in motor control centers, switchboards, etc., shall be separately connected to the main ground buss to form two separate paths to ground.

G. Fences and Grills: Fences and metal grills around equipment carrying voltage above 500 volts between phases shall be bonded together and to ground. Fences and grill work shall be grounded at every post, column, or support, and on each side of every gate.

3.4. ACCEPTANCE DOCUMENTATION AND TESTING

A. Contractor shall take and store photographs of all underground grounding system connections prior to burial of connections, for review by Engineer.

B. Upon completion of work, the entire ground system shall be shown to be in perfect working condition, in accordance with the intent of the Specifications.

C. Contractor shall measure the resistance between the main ground bonding jumper to true earth ground using the Fall of Potential method as described by ANSI/IEEE Standard 81 ("Guide for Measuring Earth Resistivity, Ground Impedance, and Earth Surface Potentials of an Earth System"). If the measured value is greater than five ohms, additional grounding electrodes shall be installed as described in Part 3.1 above. The final ground resistance value shall be submitted in writing, and documented via picture of the meter reading from the Fall of Potential test, to the Engineer prior to the final observation, and shall be included in final O&M documentation.

END OF SECTION 260526

SECTION 260533 - RACEWAYS

PART 1 - GENERAL

1.1. DESCRIPTION

A. THE WORK UNDER THIS SECTION INCLUDES BUT IS NOT LIMITED TO THE FOLLOWING:
1. Conduits
2. Conduit Fittings
3. Couplings & Connectors
4. Bushings
5. Raceway Hardware, Conduit Clamps & Supports
6. Watertight Entrance Seal Devices

PART 2 - PRODUCTS

2.1. CONDUITS

A. PVC-Coated Rigid Steel:
1. The PVC coated rigid metal conduit must be UL Listed. Hazardous location fittings, prior to plastic coating must be UL listed. All conduit and fittings must be new, unused material. Applicable UL standards may include: UL 6 Standard for Safety, Rigid Metal Conduit, UL514B Standard for Safety, Fittings for Conduit and Outlet Boxes.
2. The PVC-coated rigid metal conduit shall be ETL PVC-001 listed.
3. The conduit shall be hot dip galvanized inside and out with hot galvanized threads.
4. Form 8 Condulets®, 3/4" through 2" diameters, shall have a tongue-in-groove “V-Seal" gasket to effectively seal against the elements. The design shall be equipped with a positive placement feature to ease and assure proper installation. Certified results confirming seal performance at 15 psig (positive) and 25 in. of mercury (vacuum) for 72 hours shall be available.
5. A PVC sleeve extending one pipe diameter or two inches, whichever is less, shall be formed at every female fitting opening except unions. The inside sleeve diameter shall be matched to the outside diameter of the conduit.
6. The PVC coating on the outside of conduit couplings shall have a series of longitudinal ribs 40 mils in thickness to protect the coating from tool damage during installation.
7. Form 8 Condulets® shall be supplied with plastic encapsulated stainless steel cover screws.
8. A urethane coating shall be uniformly and consistently applied to the interior of all conduit and fittings. This internal coating shall be a nominal 2 mil thickness. Conduit or fittings having areas with thin or no coating shall be unacceptable.
9. The PVC exterior and urethane interior coatings applied to the conduit shall afford sufficient flexibility to permit field bending without cracking or flaking at temperatures above 30deg.F (-1deg.C).
10. All male threads on conduit, elbows and nipples shall be protected by application of a urethane coating.

11. All female threads on fittings or conduit couplings shall be protected by application of a urethane coating.
12. Independent certified test results shall be available to confirm coating adhesion per ETL PVC-001 standards under the following conditions:
    a. Conduit immersed in boiling water with a minimum mean time to adhesion failure of 200 hours. ASTM D870)
    b. Conduit and condulet exposure to 150deg F (65deg C) and 95% relative humidity with a minimum mean time to failure of 30 days. (ASTM D11513.
    c. The interior coating bond shall be confirmed using the Standard Method of Adhesion by Tape Test (ASTM D3359).
    d. No trace of the internal coating shall be visible on a white cloth following six wipes over the coating which has been wetted with acetone (ASTM D1308).
    e. The exterior coating bond shall be confirmed using the methods described in Section 3.8, NEMA RN1.
    f. After these tests the physical properties of the exterior coating shall exceed the minimum requirements specified in Table 3.1, NEMA RN1.
13. Water tight flex connectors used in areas where PVC coated metal conduit is utilized shall be PVC coated also.
14. Shall be as manufactured by Perma-Cote, Plastibond, Korkap, Ocal or Okote.

B. Rigid Galvanized Steel and I.M.C.:
1. Shall be galvanized outside and inside by hot dipping.
2. Shall be as manufactured by Republic, Wheatland, Triangle, Pittsburg Standard, Youngstown, Allied or equal.

C. E.M.T.:
1. Shall be Electro-Galvanized.
2. Shall be as manufactured by Republic, Wheatland, Triangle, Pittsburg Standard, Youngstown, Allied or equal.

D. Rigid Aluminum:
1. Shall be manufactured of 6063 Alloy, T-1 temper.
2. Shall be as manufactured by Republic, Wheatland, Triangle, Pittsburg Standard, Youngstown, Allied or equal.

E. Schedule 40 and 80 PVC:
1. Shall be composed of polyvinyl chloride and shall be U.L. rated type 40 or 80 for use with 90 degree rated conductors. Conduit shall conform to NEMA Standards and applicable sections of N.E.C.
2. The conduit manufacturer shall have had a minimum of 5 years experience in the manufacture of the products. Non-metallic raceways shall be as manufactured by Carlon, Triangle, Can-Tex, Allied or equal.

F. HDPE Innerduct
1. Shall be composed high density polyethylene and shall be orange in color, unless noted otherwise.
2. Shall be corrugated unless noted otherwise.
3. Shall be manufactured by Carlon, Ipex or equal.

G. Flexible Metallic Conduit:
   1. Shall be continuous spiral wound and interlocked galvanized material, code approved for grounding.

H. Liquidtight Flexible Metallic Conduit:
   1. Shall be galvanized steel-core sealtite, code approved for grounding.
   2. Shall have an outer liquidtight, nonmetallic, sunlight-resistant jacket over an inner flexible metal core.
   3. Shall be as manufactured by Electric-Flex, Anaconda or equal.

2.2. FITTINGS, COUPLINGS & CONNECTORS

A. Rigid Galvanized Steel and I.M.C. couplings and connectors shall be standard threaded type, galvanized outside and inside by hot dipping. Threadless and clamp type are not acceptable. Couplings/connectors shall be as manufactured by Raco, Efcor, or Appleton or equal.

B. All fittings, couplings and connectors (**including conduit seals, Meyers hubs, sealtite connectors, etc.**) used in areas where PVC-Coated Rigid Steel conduit is used shall also be PVC-coated.

C. All rain tight connectors shall be threaded Myers or approved equal, rated for outdoor application.

D. E.M.T. couplings and connectors shall be set screw, or steel compression type. All couplings and connectors shall be 720B, 730, 750B, or 760 series of Efcor or equal series of Raco. Pressure indented type connectors or cast metal will not be approved for any location. E.M.T. couplings and connectors shall be as manufactured by O-Z/Gedney, T&B, Efcor, Raco, Midwest or equal. E.M.T. fittings, couplings and connectors located within concrete (where allowed) shall be compression type and shall be adequately sealed with tape to ensure a concrete-tight seal.

E. Rigid Aluminum couplings and connectors shall be standard threaded type, of the same alloy as the associated conduit. Threadless and clamp type are not acceptable. Fittings shall be as manufactured by Thomas & Betts, Crouse-Hinds, Appleton, Pyle-National or equal.

F. All PVC couplings, adapters, end bells, reducers, etc., shall be of same material as conduit.

G. Liquidtight Flexible Metallic Conduit connectors shall be steel-core liquidtight with insulating throat or end bushing, designed for application with Liquidtight Flexible Metallic Conduit. Fittings shall be as manufactured by Efcor, Raco, Midwest or equal.

H. All LB unilets sizes 1 ¼” or larger shall have rollers.

I. Miscellaneous conduit fittings shall be as manufactured by Appleton, Crouse-Hinds, Pyle-National, Russell & Stoll or equal.

2.3. BUSHINGS

A. All non-grounding rigid bushings 1-1/4” and larger shall be the insulating type (O-Z/Gedney

type “BB” or equal by T&B, Midwest Electric or Penn Union).

B. All non-grounding rigid bushings 1” and smaller shall be threaded malleable iron with integral noncombustible insulator rated for 150°C. Non-grounding rigid conduit bushings shall be O-Z/Gedney type “B” or equal by T&B, Midwest Electric or Penn Union.

C. All grounding rigid bushings shall be threaded malleable iron with integral noncombustible insulator rated for 150°C. All grounding rigid conduit bushings shall be O-Z/Gedney type “BLG” or equal by T&B, Midwest Electric or Penn Union.

2.4. HARDWARE, CONDUIT CLAMPS AND SUPPORTS

A. All hardware such as expansion shields, machine screws, toggle bolts, “U” or “J” bolts, machine bolts, conduit clamps and supports shall be of corrosion resistant materials (stainless steel, aluminum, galvanized or plated steel, or other approved materials).

B. Hardware in contact with aluminum handrails, plates or structural members and all hardware in exterior, wet or corrosive areas shall be type 316 stainless steel or aluminum (with bitumastic paint coating to isolate aluminum from contact with concrete where necessary) unless specifically noted otherwise.

C. Supports in exterior, process, wet or corrosive locations shall be type 316 stainless steel or aluminum (with bitumastic paint coating to isolate aluminum from contact with concrete where necessary) unless specifically noted otherwise.

D. Supports in extremely corrosive environments (such as chlorine or fluoride storage rooms) shall be PVC-Coated steel unless specifically noted otherwise.

E. Hardware and conduit clamps shall be as manufactured by Efcor, Steel City, G.A., Tinnerman or equal.

2.5. WATERTIGHT ENTRANCE SEAL DEVICES

A. For new construction, seal devices shall consist of oversized sleeve and malleable iron body with sealing rings, pressure rings, sealing grommets and pressure clamps as required (O-Z/Gedney type FSK/WSK or equal).

B. For cored-hole applications, seal devices shall consist of assembled dual pressure disks with neoprene sealing rings and membrane clamps as required (O-Z/Gedney type CSM or equal).

PART 3 - EXECUTION

3.1. RACEWAY APPLICATION

A. Minimum Diameter: 3/4-inch.

B. Raceway Type: Raceway types shall be as specified below, unless indicated otherwise on drawings:
   1. Exterior, Exposed: Rigid Aluminum unless otherwise noted.

2. Exterior, Used for Instrumentation Circuits: See Below.
3. Other Exterior (Concrete-Encased or Direct Earth Buried): Schedule 40 PVC. PVC conduit shall convert to metallic conduit prior to exiting concrete-encasement or direct earth burial. See "transition" items below for additional requirements. Conduits shall be left exposed until after Engineer's observation.
4. Interior, Exposed:
   a. Hazardous Locations: Rigid Aluminum .
   b. Wet Locations (including, but not limited to, Pump Rooms, Areas with exposed piping, Dewatering Rooms, Wet Wells, Underground Vaults, and other similar locations): Rigid Aluminum .
   c. Dry Locations: Rigid Aluminum.
   d. Extremely Corrosive Locations (Chlorine Storage Rooms, Fluoride Storage Rooms and other similar areas): Schedule 80 PVC.
5. Interior, Concealed:
   a. Embedded inside Poured Concrete Walls, Ceilings or Floors, with a minimum of 2" of concrete between finished surface and outer wall of conduit on all sides, where no anchor bolts, screws or other similar items will be installed: Schedule 40 PVC. PVC conduit shall convert to metallic conduit (exact type as specified elsewhere within this section) prior to exiting poured concrete-encasement of wall, ceiling, floor or ductbank. See "transition" items below for additional requirements.
   b. Other Raceways Embedded inside Poured Concrete Walls, Ceilings or Floors (not meeting requirements above): PVC-Coated Rigid Steel
   c. Other Raceways: E.M.T.
6. Raceways used for Instrumentation Circuits:
   a. Typical Dry or Wet Locations: Rigid Aluminum .
   b. Underground or Locations Embedded inside Poured Concrete: PVC-Coated Rigid Steel.
   c. Extremely Corrosive Locations (Chlorine Storage Rooms, Fluoride Storage Rooms and other similar areas): PVC-Coated Rigid Steel.
7. Terminations at motors, transformers and other equipment which has moving or vibrating parts:
   a. Exterior or Wet Locations (including, but not limited to, Pump Rooms, Wet Wells, Underground Vaults, and other similar locations): Liquidtight Flexible Metallic Conduit (shall generally not exceed 24 inches in length) with watertight fittings.
   b. Dry, Interior Locations: Flexible Metallic Conduit (shall generally not exceed 24 inches in length).
8. Terminations at instruments:
   a. Liquidtight Flexible Metallic Conduit (shall generally not exceed 12 inches in length) with watertight fittings.
9. Terminations at fixtures mounted in grid-type ceilings:
   a. Flexible Metallic Conduit or MC cabling (shall generally not exceed 72 inches in length and shall run from junction box to fixture, not from fixture to fixture).
10. Transition from underground or concrete-encased to exposed:
   a. Convert PVC to PVC-Coated Rigid Steel utilizing PVC-Coated Rigid Steel 90 degree bends (and vertical conduits as required by application) prior to exiting concrete/grade (except at outdoor pull boxes and under freestanding electrical equipment, where terminations shall be by PVC end bells installed flush with

top of slab). Exposed portions of these coated conduits shall extend a minimum of 6" above floor level, and shall be installed at uniform heights.

3.2. RACEWAY INSTALLATION

A. General:

1. Follow methods which are appropriate and approved for the location and conditions involved. Where not otherwise shown, specified, or approved in a particular case, run all wiring concealed.
2. Where conduit crosses a structural expansion joint an approved conduit expansion fitting shall be installed.
3. Where any run of rigid aluminum conduit (including bends) exceeds 50' in length, an approved conduit expansion fitting shall be installed (beginning at center of run) at intervals not to exceed 50' on center.
4. A non-conductive polypropylene pull string, properly tied/secured at either end, shall be installed in all empty conduits.
5. Metal conduit field-cuts shall be cut square with a hacksaw and the ends reamed after threading.
6. PVC conduit field-cuts shall be made with hacksaw, and ends shall be deburred.
7. All PVC joints shall be made as follows:
   a. Clean the outside of the conduit to depth of the socket, and the inside of socket with an approved cleaner.
   b. Apply solvent cement as recommended by the conduit manufacturer to the interior of the socket and exterior of conduit, making sure to coat all surfaces to be joined.
   c. Insert conduit into the socket and rotate 1/4 to 1/2 turn and allow to dry.
8. All metallic conduit installed below grade or within concrete shall be painted with two (2) coats of asphaltum paint prior to installation.
9. Install ground wire sized per N.E.C. Table 250.122 in all conduits.
10. Use of running threads is absolutely prohibited. Conduit shall be jointed with approved threaded conduit couplings. Threadless and clamp type not acceptable.
11. Conduits shall be sized in accordance with latest National Electrical Code except when size shown on drawings.
12. Exposed, field-cut threads on all metal conduits shall be painted with zinc primer (for Galvanized Rigid or I.M.C.) or urethane paint (for PVC-Coated Rigid Steel) as recommended by conduit manufacturer .
13. Installation of PVC coated conduit systems shall be performed in strict accordance with the manufacturer's installation instructions. Damage to PVC coated conduit coating shall be touched up with patching compound as directed by manufacturer. To assure correct installation, the installer shall be certified by the manufacturer to install coated conduit.

B. Routing/Locating:

1. Exposed conduit runs shall be run level and plumb and shall, on interior of buildings, be run parallel and/or at right angles to building walls and/or partitions.
2. Conduit with an external diameter larger than 1/3 the thickness of a concrete slab shall not be placed in the slab. Conduits in slab shall not be spaced closer than 3 diameters on center.

3. Conduit run in ceiling spaces shall be run as high as possible, all at same level, and shall be supported from building structure. Do not support conduit from any other installation.
4. Conduit run within exterior CMU, concrete or other similar walls shall be run within the CMU cells / concrete structure / etc. Conduits shall not be run on the outside surface of CMU cells / concrete structure / etc. underneath exterior veneers / etc., which could cause a thermal break in the wall insulation or a future water intrusion problem.
5. Install conduit runs to avoid proximity to steam or hot water pipes. In no place shall a conduit be run within 6" of such pipes except where crossing is unavoidable, then conduit shall be kept at least 3" from the covering of the pipe crossed.
6. Before installing raceways for motors, HVAC equipment and other fixed equipment, check location of all equipment connections/terminal boxes with equipment supplier and locate and arrange raceways appropriately.
7. No conduit for instrumentation shall be run closer than 12 inches to parallel power conduits.
8. A minimum of 12" of clearance (or more as required by associated utility companies) shall be provided between the finished lines of exterior, underground conduit runs and exterior, underground utilities (gas, water, sewer, etc.).
9. Where any portion of raceway is installed in a wet environment (such as below grade) and located at a higher elevation than the raceway termination point in a dry environment, install watertight compound inside raceway at termination around cabling to prevent transfer of water through conduit system. Watertight compound shall be rated for the potential water head pressure, based on the assumption that ground water level would be at grade level.

C. Bends:
1. Do not make bends (in any raceway, including flexible conduits) that exceed allowable conductor bending radius of cable to be installed or that significantly restrict conductor flexibility.
2. All bends within concrete-encased ductbanks installed in exterior locations shall be long radius bends (24" minimum bending radius – varies with conduit diameter).
3. All bends in raceways containing multi-conductor power cables (such as shielded VFD cables) shall be long radius bends (24" minimum bending radius – varies with conduit diameter).
4. Where numerous exposed bends or grouped together, all bends shall be parallel, with same center and shall be similar in appearance
5. All PVC elbows, bends, etc., shall be either factory bends or made with an approved heat bender.

D. Support:
1. Anchor conduit securely in place by means of approved conduit clamps, hangers, supports and fastenings. Arrangement and methods of fastening all conduits shall be subject to Engineer's direction and approval. All conduits shall be rigidly supported (wire supports may not be used in any location). Use only approved clamps on exposed conduit.
2. Rigid Aluminum Conduits shall be supported at intervals not to exceed 5' on center.
3. Conduit in riser shafts shall be supported at each floor level by approved clamp hangers.
4. Right angle beam clamps and U bolts shall be specially formed and sized to snugly fit the outside diameters of conduits.

5. Where installed in seismic zones, suspended raceways shall be braced in two (2) directions as required to prevent swaying and excessive movement.
6. Raceways installed on top of flat roofing shall be supported a minimum of 3 ½" above roof with rubber block supports (Cooper B-Line Dura-Blok or equal). Installation shall be in strict accordance with support manufacturer's instructions and recommendations.

E. Terminations:
1. All conduit connections to sheet metal cabinets or enclosures located in exterior or wet locations shall terminate by use of rain tight hubs.
2. Where rigid or I.M.C. conduits enter sheet metal boxes, they shall be secured by approved lock nuts and bushings.
3. Where metal conduits enter outdoor pull boxes, manholes, under freestanding electrical equipment or other locations where direct metal-to-metal contact does not exist between enclosure and conduit, grounding bushings shall be installed. Each grounding bushing shall be connected to the enclosure ground and all other grounding bushings with properly sized grounding conductors.
4. Where E.M.T. enters sheet metal boxes they shall be secured in place with approved insulating fittings.
5. Where PVC enters outdoor pull boxes, manholes or under freestanding electrical equipment, PVC end bells shall be installed.
6. Where conduit terminates in free air such that associated cabling/circuitry becomes exposed (such as at cable trays, etc.), conduit shall generally terminate in a horizontal orientation (to prevent dust/debris/etc. from entering conduit system). Where vertical conduit termination is necessary, the termination shall be provided with cord-grip conduit terminations to seal the conduit system.
7. Conduit ends shall be carefully plugged during construction.
8. Permanent, removable caps or plugs shall be installed on each end of all empty raceways with fittings listed to prevent water and other foreign matter from entering the conduit system.

F. Penetrations:
1. All fire/smoke barrier penetrations shall be made in accordance with a U.L. listed assembly. Refer to drawings and other specifications for additional requirements.
2. All penetrations shall be at right angles unless shown otherwise.
3. Structural members (including footings and beams) shall not be notched or penetrated for the installation of electrical raceways unless noted otherwise without specific approval of the structural engineer.
4. Dry-packed non-shrink grout or watertight seal devices shall be used to seal openings around conduits at all penetrations through concrete walls, ceilings or aboveground floors.
5. All raceways entering structures shall be sealed (at the first box or outlet) with polyurethane grout compound that expands to form a flexible foam seal that prevents the entrance of gases or liquids from one area to another (Prime Resins Prime-Flex or equal).
6. All raceways passing through concrete roofs or membrane-waterproofed walls or floors shall be provided with watertight seals as follows:
   a. Where ducts are concrete encased on one side: Install watertight entrance seal device on the accessible side of roof/wall/floor as directed by equipment manufacturer.

b. Where ducts are accessible on both sides: Install watertight entrance seal device on each side of roof/wall/floor as directed by equipment manufacturer.

7. All raceways passing through walls of rooms containing/storing noxious chemicals (chlorine, ammonia, etc.) or through hazardous locations shall be sealed with conduit seals (Crouse-Hinds type EYS or equal).
8. All raceways terminating into electrical enclosures/devices/panels/etc. located in hazardous locations shall be sealed with conduit seals (Crouse-Hinds type EYS, EZS or equal) within 18" of the termination.

G. Exterior Electrical Ductbanks:

1. Where exterior electrical concrete-encased ductbanks are indicated on drawings, conduit runs between buildings or structures shall be grouped in concrete-encased ductbanks as follows:
   a. A minimum of 3" of concrete shall encase each side of all ductbanks.
   b. A minimum of 1 ½" of separation shall be provided between each conduit within ductbanks. PVC spacers shall be installed at the necessary intervals prior to placement of concrete to maintain the required spacing and to prevent bending or displacement of the conduits.
   c. Top of concrete shall be a minimum of 30" below grade. A continuous magnetic marking tape shall be buried directly above each ductbank, 12" below grade.
   d. Exact routing of ductbanks shall be field verified and shall be modified as necessary to avoid obstruction or conflicts.
   e. Underground electrical raceways shall be installed to meet the minimum cover requirements listed in NEC Table 300.5. Refer to drawings for more stringent requirements.

END OF SECTION 260533

SECTION 260534 - OUTLET BOXES, JUNCTION BOXES, WIREWAYS

PART 1 - GENERAL

1.1. DESCRIPTION

A. Outlet and Junction Boxes

B. Pull Boxes

C. Wireways

PART 2 - PRODUCTS

2.1. OUTLET BOXES & JUNCTION BOXES (THROUGH 4-11/16")

A. Sheet Metal: Shall be standard type with knockouts made of hot dipped galvanized steel as manufactured by Steel City, Raco, Appleton, Bowers or equal.

B. Cast: Shall be type FS, FD, JB, GS, or SEH as required for application as manufactured by O-Z/Gedney, Appleton, or equal.

C. Nonmetallic: Shall be type Polycarbonate/ABS construction as required for application with non-metallic quick-release latches as manufactured by Hoffman, O-Z/Gedney, Appleton, or equal.

2.2. JUNCTION AND PULL BOXES (LARGER THAN 4-11/16")

A. Oil-Tight JIC: Shall be Hoffman Type CH box or approved equal.

B. Galvanized Cast Iron or Cast Aluminum: Shall be O-Z/Gedney or approved equal.

C. Stainless Steel: Shall be as manufactured by O-Z/Gedney, Hoffman or approved equal. Boxes shall have continuous hinges, seamless foam-in-place gaskets and screw-down clamps.

D. Nonmetallic: Shall be type Polycarbonate/ABS construction as required for application with non-metallic quick-release latches as manufactured by Hoffman, O-Z/Gedney, Appleton, or equal. Boxes shall have hinged covers and screw-down clamps.

E. Wireways: Shall be standard manufacturer's item as manufactured by Hoffman, Square "D", Burns, B & C or equal. Wireways shall have hinged covers and screw-down clamps.

F. Pre-cast Polymer Concrete Below-Grade Hand Holes & Pull Boxes:
   1. Enclosures, boxes and cover are required to be UL Listed and conform to all test provisions of ANSI/SCTE 77 "Specifications For Underground Enclosure Integrity" for Tier 15 applications (15,000lb design load and 22,500lb test load) unless noted otherwise.

2. All covers shall have a minimum coefficient of friction of 0.05 in accordance with ASTM C1028 and the corresponding Tier level shall be embossed on the top surface.
3. Cover shall be bolt-down include factory-labeling to read “Electric”, “Communications” or other as directed.
4. Hardware shall be stainless steel.
5. Shall be Quazite PG/LG Style or approved equal.

PART 3 - EXECUTION

3.1. APPLICATION

A. General
1. All boxes and wireways shall be of sufficient size to provide free space for all enclosed conductors per NEC requirements. Fill calculations shall be performed by contractor per NEC requirements.

B. Outlet Boxes & Junction Boxes (through 4-11/16”)
1. Sheet metal boxes shall be used on concealed work in ceiling or walls.
2. Cast boxes shall be used wherever Rigid or I.M.C. conduits are installed.
3. All boxes installed in extremely corrosive areas (such as chlorine and fluoride storage rooms) where non-metallic raceways are used shall be non-metallic.
4. Except when located in exposed concrete block, switch and receptacle boxes shall be 4" square for single gang installation. Appropriate gang boxes shall be used for mounting ganged switches.
5. When installed in exposed concrete block, switch and receptacle boxes shall be square type designed for exposed block installation.
6. Ceiling outlet boxes shall be 4" octagon 1-1/2" deep or larger required due to number of wires.
7. Boxes installed in hazardous locations shall be explosion-proof rated for the associated application, constructed of copper-free cast aluminum.

C. Junction & Pull Boxes (larger than 4-11/16”)
1. For all below grade exterior use and elsewhere as shown:
   a. In areas subject to future vehicular traffic: shall be galvanized cast iron (rated AASHTO H-20 Loading unless noted otherwise).
   b. In areas not subject to vehicular traffic: shall be galvanized cast iron or pre-cast polymer concrete (rated for Tier 15 Loading unless noted otherwise).
2. All boxes installed exposed in exterior or wet areas shall be stainless steel (NEMA 4X).
3. All boxes installed exposed in corrosive areas shall be stainless steel (NEMA 4X).
4. All boxes installed in extremely corrosive areas (such as chlorine and fluoride storage rooms) where non-metallic raceways are used shall be non-metallic.
5. Padmounted Pull Boxes shall be installed as shown on Plans or as required by project conditions. Transclosure-style Padmounted boxes shall be installed wherever required by the quantities and sizes of conductors. Contractor shall submit all Padmounted Pull Box types prior to ordering for engineer’s review and comment.
6. Boxes installed in hazardous locations shall be explosion-proof rated for the associated application, constructed of copper-free cast aluminum.
7. All others shall be oil tight JIC box not less than 16 gauge.

3.2. INSTALLATION

A. General
1. All boxes and wireways shall be securely anchored.
2. All boxes shall be properly sealed and protected during construction and shall be cleaned of all foreign matter before conductors are installed.
3. All boxes and wireways shall be readily accessible. Contractor shall be responsible for furnishing and installing access panels per architect's specifications. Locations shall be as directed by the architect as required to make boxes, wireways, electrical connections, etc. accessible where above gypsum board ceilings or in other similar locations.
4. All metallic boxes and wireways shall be properly grounded.
5. Refer to Specification Section 260553 for identification requirements.

B. Outlet Boxes & Junction Boxes (through 4-11/16")
1. Boxes shall be provided with approved 3/8" fixture studs were required.
2. Recessed boxes for wiring devices, surface fixtures, or connections, shall be set so that the edge of cover comes flush with finished surface.
3. There shall be no more knockouts opened in any sheet metal box than actually used.
4. Any unused opening in cast boxes shall be plugged.
5. Back to back boxes to be staggered at least 3 inches.
6. Under no circumstances shall through-the-wall boxes be used.

C. Junction & Pull Boxes (larger than 4-11/16")
1. Pull boxes shall be installed as indicated on plans and/or as required due to number of bends, distance or pulling conditions.
2. Boxes to be imbedded in concrete shall be properly leveled and anchored in place before the concrete is poured.
3. All pull boxes and/or junction boxes installed exterior below grade, shall have their tops a minimum of 1-1/2 inches above surrounding grade and sloped so that water will not stand on lid. A positive drain shall be installed, to prevent water accumulation inside.
4. Above grade pull boxes shall be installed on concrete anchor bases as shown on Plans.

D. Wireways and/or wall-mounted equipment
1. Mount each wireway to channels of the same metal type as the wireway.
2. Conductors serving a wireway shall be extended without reduction in size, for the entire length of the wireway. Tap-offs to switches and other items served by the wireway shall be made with ILSCO type GTA with GTC cap.

END OF SECTION 260534

SECTION 260553 - ELECTRICAL IDENTIFICATION

PART 1 - GENERAL

1.1. DESCRIPTION

A. Wire and cable identification.

B. Pullbox & Junction Box Identification

C. Electrical distribution & utilization equipment identification.

D. Emergency and Standby Power receptacle identification.

E. Instrument and control device identification.

F. Raceway identification.

PART 2 - PRODUCTS

2.1. WIRE AND CABLE IDENTIFICATION

A. Intermediate Locations:
1. Wires and cable labels shall be white, thermal transfer, halogen-free, flame-retardant marker plates (sized to accommodate three lines of text) permanently affixed to the associated cable with UV-resistant plastic wire ties. Labels shall be Panduit #M200X/300X series or equal.

B. Circuit/Cable Termination Locations:
1. Wires and cable labels shall be non-ferrous identifying tags or pressure sensitive labels unless noted otherwise.

2.2. ELECTRICAL DISTRIBUTION & UTILIZATION EQUIPMENT IDENTIFICATION

A. Labels on electrical distribution & utilization equipment shall be black-on-white engraved Bakelite nameplates permanently affixed to the equipment with rivets or silicone adhesive unless noted otherwise.

2.3. EMERGENCY AND STANDBY POWER RECEPTACLE IDENTIFICATION

A. Receptacles fed from emergency or standby power sources (such as emergency generators) shall be provided with factory-marked engraved coverplates as follows:
1. Emergency System source: Red engraved lettering to read “EMERGENCY”.
2. Legally-Required or Optional Standby Generator source:
   a. If only part of facility is fed with generator backup: Black engraved lettering to read “FED FROM GENERATOR”.

b. If entire facility is fed with generator backup: No "….GENERATOR…" label required.

2.4. INSTRUMENT AND CONTROL DEVICE IDENTIFICATION

A. Instruments and control device labels shall be black-on-white engraved Bakelite nameplates permanently affixed to the equipment or the adjacent, visible mounting surface with silicone adhesive or stainless steel wire ties.

2.5. RACEWAY IDENTIFICATION

A. Raceway labels shall be white thermal transfer marker plates permanently affixed to the associated raceway with stainless steel wire ties, with two wire ties (one on either end of marker plate to provide a flush installation) where possible. Labels shall be Panduit #M300X series or equal.

PART 3 - EXECUTION

3.1. GENERAL

A. Any proposed deviation in identification methods and materials from those described herein shall be submitted to Engineer for review and comment prior to installation.

B. Contractor shall provide all labeling or identification required by applicable local, state and national codes. These specifications do not intend to itemize all code-required labeling or identification requirements.

C. All labels/identification shall be positioned such as to be readable from the normal perspective without adjusting wiring/cables/labels. For example, labels/identification of wires/cables within cable trays shall be positioned to point towards the viewer (typically downward for overhead cable trays, or upward for cable trays within trenches).

D. All labels/identification (except for handwritten labels on concealed pullbox/junction box covers as noted below) shall be typewritten/printed/engraved in a neat, workmanlike, permanent, legible, consistent and meaningful manner. Labels shall not be handwritten unless specific approval is granted by engineer.

3.2. WIRE AND CABLE IDENTIFICATION

A. General:
1. Where cabling is exposed (such as within cable trays), provide two wire ties per cable (one on either end of marker plate to provide a flush installation). Where cabling is concealed (such as within pullboxes/wireways), one wire tie per cable will be acceptable.

B. Intermediate Locations:
1. Thermal transfer labels shall be securely fastened to all wiring and cabling in the following locations:
   a. Wireways
   b. Pullboxes/Junction boxes larger than 4-11/16"

c. Pullboxes/Junction boxes through 4-11/16" where wires and cables are not easily identifiable via the color coding and box labeling
d. Vaults & Manholes
e. Approximately every 50 feet within cable trays (especially at locations where cables exit or diverge). Labels within cable trays shall be grouped (rather than being pre-labeled on cables and pulled into cable trays).
f. Other similar intermediate locations.

2. Labels shall be stamped or printed with the following data so that the feeder or cable can be readily identified and traced:
   a. From where the circuit originates (including panel designation and circuit number):
      1) Ex: "FROM: PP-A CIR. 3 (IN MAIN ELEC ROOM)"
   b. To where the circuit extends (using the common name of the equipment):
      1) Ex: "TO: RTU-6 (ON ROOF)"
   c. The purpose of the circuit:
      1) Ex: "POWER"
   d. The set number (If parallel power feeds are used).
      1) Ex: "SET NO. 3 OF 4"

C. Circuit/Cable Termination Locations:
1. Where multiple termination points exist within a circuit origination point (panelboard, switchboard, MCC, starter, etc.) or other similar circuit endpoint (control panel, etc.), labels shall be securely fastened to all ungrounded and neutral conductors to clearly identify the terminal and/or circuit number associated with each conductor. For example, within lighting panels, each phase and neutral conductor shall be labeled near the terminals at a clearly visible location with the associated circuit number(s), so that if all conductors were unterminated, the labels would clearly indicate which conductor was associated with each circuit.

D. Refer to Specification Section 260519 for all color-coding requirements of wires and cables.

3.3. PULLBOX & JUNCTION BOX IDENTIFICATION

A. Concealed pullboxes/junction boxes:
1. Front surface of all pullbox/junction box covers in concealed areas (such as above lay-in ceilings) or within mechanical/electrical rooms (and other similar areas where appearance of boxes is not an issue) shall be neatly marked with the ID of circuits/cables contained with permanent black marker on cover of box (Ex: "RP-1A Cir. 1, 2 & 3"). Additionally, front surface of box shall be painted red where box contains fire alarm system cabling.

B. Exposed pullboxes/junction boxes:
1. Interior surface of all pullbox/junction box covers in exposed areas shall be labeled "Power", "Telecommunications", "Fire Alarm" or with other similar general text neatly with permanent black marker to indicate function of box. Circuit/cable labeling within box (see above) shall identify specific cables contained. Additionally, interior surface of cover shall be painted red where box contains fire alarm system cabling.

C. Where pullboxes/junction boxes are named on contract documents (Ex:"PULLBOX #3"), an engraved nameplate shall be installed on the front surface of the box to identify the name.

3.4. ELECTRICAL DISTRIBUTION & UTILIZATION EQUIPMENT IDENTIFICATION

A. General:
1. All new and existing equipment modified by this project shall include arc-flash warning labels in accordance with NEC article 110.16.

B. All Panels, Motor Control Centers, Switchboards, Switchgear, Transformers, Etc.:
1. Engraved nameplates identifying name of equipment, nominal voltage and phase of the equipment and where the equipment is fed from shall be installed on front surface of all panels, motor control centers, switchboards, switchgear, transformers, etc.:
   a. Ex: First Line: "NAME: RP-A", Second Line: "120/208V-3Ø-4W", Third Line: "FED FROM: PP-A CIR. 4 (IN MAIN ELEC ROOM)"
2. Refer to Panelboard Specification Sections for additional labeling requirements (circuit directory cards, permanent circuit labels, permanent circuit numbers, etc.) required inside panelboards.

C. Safety/Disconnect Switches and Utilization Equipment (HVAC Equipment, Pumps, Powered Valves, Control Panels, Starters, Etc.)::
1. Engraved nameplates identifying equipment being fed and where the equipment is fed from shall be installed on front surface of all disconnect switches (including both visible blade type switches and toggle-type switches) and on utilization equipment (where not clearly identified by immediately adjacent local disconnect switch):
   a. Ex: First Line: "RTU-6", Second Line: "FED FROM: PP-A CIR. 5"
2. Where safety/disconnect switches are installed on the load side of variable frequency drives, the safety/disconnect switch shall be furnished with an additional engraved nameplate to read: "WARNING: TURN OFF VFD PRIOR TO OPENING THIS SWITCH".
3. Safety/Disconnect switches feeding equipment that is fed from multiple sources (such as motors with integral overtemperature contacts that are monitored via a control system) and Utilization Equipment fed from multiple sources shall be furnished with an additional BLACK-ON-YELLOW engraved nameplate to read: "WARNING: ASSOCIATED EQUIPMENT FED FROM MULTIPLE SOURCES – DISCONNECT ALL SOURCES PRIOR TO OPENING COVER".

D. Emergency Systems:
1. A sign shall be placed at the service entrance equipment (and at any remote shunt trip operators, or similar, for service equipment) indicating the type and location of on-site emergency power sources (such as generators, central battery systems, etc.) per NEC requirements.
2. All boxes and enclosures (including transfer switches, generators, power panels, junction boxes, pullboxes, etc.) dedicated for emergency circuits shall be permanently marked with white-on-red engraved nameplates so they will be readily identified as a component of an emergency circuit or system.

E. Services:

1. All Service Equipment:
   a. Engraved nameplates identifying maximum available fault current, including date the fault current calculation was performed, in accordance with NEC article 110.24.
      1) Ex: First Line: "AVAILABLE FAULT CURRENT: 16,154 AMPS", Second Line: "DATE CALCULATED: JULY 8, 2013"
   b. All service entrance equipment shall be clearly labeled as being service entrance rated.
2. Where a building or structure is supplied by more than one service (or any combination of branch circuits, feeders and services), a permanent plaque or directory shall be installed at each service disconnect location denoting all other services, feeders & branch circuits supplying that building or structure and the area served by each, per NEC requirements.

F. Generators:
   1. Generators shall be labeled with engraved nameplates identifying name of equipment.

3.5. EMERGENCY AND STANDBY POWER RECEPTACLE IDENTIFICATION

A. Receptacles fed from emergency or standby power sources (such as emergency generators) shall be provided with factory-marked engraved coverplates as described above.

3.6. INSTRUMENT AND CONTROL DEVICE IDENTIFICATION

A. New Instruments and control devices (whether furnished by contractor or not) shall be labeled with black-on-white engraved nameplates permanently affixed to the equipment or to the adjacent, readily-visible mounting surface with silicone adhesive or stainless steel wire ties.
   1. Instruments and process control devices (float switches, etc.) shall be labeled with instrument name and, where available, instrument ID number.
   2. Pushbutton stations shall be labeled with equipment being controlled. Labels shall be installed on front surface (or adjacent mounting surface) of all pushbutton stations.
   3. Thermostats and other similar HVAC control devices installed in process areas shall be labeled with equipment being controlled. Labels shall be installed on front surface (or adjacent mounting surface) of all thermostats and other similar HVAC control devices.

3.7. RACEWAY IDENTIFICATION

A. Each exposed raceway shall be labeled at the point where it becomes concealed, such as where it enters a concrete floor slab, a concrete wall, the ground, etc.

B. Each raceway entering in-grade or on-grade pullboxes/junction boxes, where the conduits are only visible inside the box, shall be labeled within the box at the point where the raceway becomes concealed.

C. Raceway nameplates shall identify:
   1. The location of the other end of the raceway ("TO MCC-1" or similar). If the other end of the raceway is at an intermediate, named pullbox ("INSTRUMENTATION PULLBOX #4" or similar), that pullbox name shall be labeled rather than the endpoint of the circuitry.

3.8. OTHER IDENTIFICATION

A. Factory-engraved coverplates identifying functions of light switches and other similar devices shall be installed where so required by plans/specifications.

END OF SECTION 260553

SECTION 262726 - WIRING DEVICES

PART 1 - GENERAL

1.1. DESCRIPTION

A. Wiring Devices

B. Plates

C. Finishes

PART 2 - PRODUCTS

2.1. WIRING DEVICES AND PLATES

A. Switches shall be AC type, extra-heavy duty industrial grade (unless otherwise shown) of ratings shown on drawings. Switches shall be as manufactured by Hubbell, P & S, Sierra, Bryant, GE, Arrow Hart or equal.

B. Receptacles shall have blade configuration and shall be extra-heavy duty industrial grade (unless otherwise shown) of current and voltage rating as shown on drawings. Receptacles shall be as manufactured by Hubbell, P & S, Sierra, Bryant, GE, Arrow Hart or equal.

C. All GFCI-type receptacles shall continuously self-test and shall trip/deny power if the receptacle does not provide proper GFCI protection or if the line/load terminations are miswired and shall provide visual indication of power status, trip conditions, ground fault conditions and end-of-life status.

D. Each wiring device shall have a plate (see “Finishes” section below for specific requirements).

2.2. FINISHES

A. All wiring devices (switches, receptacles, etc.) shall be colored to match the coverplates described below. For instance, all items covered by stainless steel, aluminum or malleable iron plates shall be gray in color.
   1. Exceptions:
      a. Emergency wiring devices shall be red.
      b. Isolated ground wiring devices shall be orange.

B. Coverplates for recessed, wall-mounted electrical items (switches, receptacles, telephone outlets, etc.) shall be stainless steel unless shown otherwise.

C. Coverplates, trim rings, etc. for recessed, floor-mounted electrical items (floor outlets, underfloor duct junctions, etc.) shall match finish of building hardware (302/304 stainless steel, brass, etc.) in area installed.

D. Coverplates for exposed electrical items (switches, receptacles, telephone outlets, etc.) shall be of same material as exposed boxes (see Outlet Box Specification for required material type) and shall have beveled edges.

E. Coverplates for receptacles in wet locations shall be metallic, in-use type, rated for wet locations per NEC requirements unless noted otherwise.

F. See “Electrical Identification” specification section for coverplate labeling requirements.

PART 3 - EXECUTION

3.1. GENERAL MOUNTING

A. Symbols on drawings and mounting heights are approximate. The exact locations and mounting heights shall be determined on the job, and it shall be the Contractor's responsibility to coordinate with all trades to secure correct installation. For example, Contractor shall coordinate exact mounting heights over counters, in or above backsplashes, in block walls, and at other specific construction features.

B. Verify all door swings with Architectural. Locate boxes for light switches within four inches of door trim on swing side (not hinge side) of door.

C. Devices and associates plates shall not be used as support; outlet boxes shall be rigidly supported from structural members.

D. Mount all straight-blade receptacles vertically with ground pole up, unless specifically noted otherwise.

E. Unless otherwise shown or required by local handicap codes, centerline of outlet boxes shall be the following distances above the finished floor unless otherwise noted.
1. Receptacles and telephone outlets in offices and other finished areas: 1’-6”
2. Receptacles and telephone outlets in equipment rooms and other unfinished areas: 4’-0”
3. Receptacles over counters: As Noted
4. Switches, general: 4’-0”
5. Push-button, etc., general: 4’-0”

END OF SECTION 262726

SECTION 262816 - SAFETY SWITCHES AND FUSES

PART 1 - GENERAL

1.1. DESCRIPTION

A. Safety Switches

B. Fuses

C. Branch Feeders

D. Feeders

PART 2 - PRODUCTS

2.1. SAFETY SWITCHES

A. Safety switches shall be quick-make, quick-break, NEMA heavy duty type HD, fused or nonfused as shown. Switch blades shall be fully visible in the off position.

B. Safety switches shall be furnished with transparent internal barrier kits to prevent accidental contact with live parts. Barriers shall provide finger-safe protection when the switch door is open and shall allow use of test probes and removal of fuses without removing barrier.

C. Fused switches shall have provisions for class R, rejection type fuses.

2.2. FUSES (600V)

A. Fuses for all branch switches shall be Bussman Mfg. Co., Dual Element, Class “R” Fusetron.

B. Fuses for main switch/switches shall be Bussman Mfg. Co. Hi-Cap.

2.3. MANUFACTURER

A. Safety switches shall be as manufactured by Square 'D', G.E., Siemens or Cutler Hammer.

B. Fuses shall be as manufactured by Bussman Mfg. Co. or equal.

PART 3 - EXECUTION

3.1. SAFETY SWITCHES

A. Safety switches shall be installed as shown on the plans and in accordance with N.E.C.

B. Locations shown for safety switches on plans are diagrammatical only. Exact locations shall be field coordinated by contractor as required to provide code-required clearances.

C. Switch enclosures shall be rated NEMA I indoors in dry locations and NEMA 4 stainless steel outdoors and in wet or process areas.

D. Adequate support shall be provided for mounting safety switches. Safety switches shall not be mounted to the associated equipment (unless the safety switch is furnished with the equipment).

3.2. FUSES

A. Fuses shall be sized as shown on drawings, unless a smaller size is required by the associated equipment supplier, in which case the contractor shall provide fuses sized as directed by the associated equipment supplier at no additional cost.

B. Provide not less than one spare set of fuses for each size used. Provide an additional spare set for each five sets of same size fuses used.

END OF SECTION 262816

SECTION 262900 - MANUFACTURED CONTROL PANELS

PART 1 - GENERAL

1.1. SCOPE

A. This section describes control stations, PLC panels, motor control panels, manufactured control panels, and other similar panels specified herein. Specifications herein are intended as an extension of requirements in other Divisions of these specifications where reference is made to Electrical Specifications.

1.2. DEFINITIONS

A. "Control Stations": Enclosures (with all required accessories) containing only door-mounted pushbuttons, indicator lights and/or selector switches (no electronic components or starter/controller equipment).

B. "Control Panels": Enclosures (with all required accessories) containing equipment/devices other than door-mounted pushbuttons, indicator lights and/or selector switches (such as electronic components, starter/controller equipment, etc.).

1.3. SUBMITTALS

A. Provide the following for each control panel:
   1. A job-specific, custom wiring diagram
      a. The wiring diagram shall clearly show all components (whether the components are mounted internal or external to the control panel enclosure).
      b. All wires and terminal blocks shall be clearly labeled.
      c. Diagram shall be in accordance with NEMA/ICS standards.
   2. Size, type and rating of all system components.
   3. Unit frontal elevation and dimension drawings.
   4. Internal component layout diagrams.
   5. Manufacturer's product data sheets for all components.

B. A Bill of Materials shall be included with catalog information on all components.

C. Information shall be included on any proprietary logic component sufficient to demonstrate its ability to perform the required functions.

D. The following calculations shall be submitted:
   1. Thermal calculations showing amount of air conditioning or ventilation and heating required for each control panel, per ambient requirements listed below and operating temperature limitations of all equipment/devices within each control panel. Where possible, forced air ventilation shall be utilized rather than air conditioning. Panel shall be oversized, interior equipment/devices shall be derated, and solar shielding shall be provided as required to allow the use of forced air ventilation as the cooling method.

a. Thermal calculations used for sizing cooling/ventilation systems for each control panel located in exterior or non-conditioned spaces shall assume:
   1) Ambient exterior air temperature ranges of -5 degrees F to 105 degrees F.
   2) Full solar contact where applicable (not applicable where enclosures are fully protected from solar contact using solar shields separated from panel enclosure with standoffs or similar).
   3) No wind.
   4) Heat loss from interior equipment (electronics, etc.) per equipment supplier's information.

b. Thermal calculations used for sizing heating systems for each control panel shall assume:
   1) Ambient exterior air temperature ranges of -5 degrees F to 105 degrees F.
   2) No heat loss by interior components of control panel.
   3) No solar gain on exterior of control panel.
   4) Doubling of heating wattage required to account for wind where control panels are located outdoors.
   5) Minimum temperature difference (due to heating) of 10 degrees F to prevent condensation, regardless of equipment temperature limitations.

2. Load calculations showing the sizing of all power supplies provided (with spare capacity as specified).
3. Load calculations showing the sizing and anticipated runtime of all Uninterruptible Power Supply systems provided (with spare capacity as specified).

PART 2 - PRODUCTS

2.1. GENERAL

A. Control panels shall be Underwriters' Laboratories labeled by the panel manufacturer. Control panel manufacturers not capable of applying the U.L. label to their products are unacceptable.

B. All human interface equipment/devices (indicator lights, selector switches, pushbuttons, time switches, displays, keypads, and other similar items used for control, adjustments or monitoring) shall be mounted on the non-energized side of enclosure door(s) in such a way as to be accessible without exposing the user to energized parts.

2.2. RATINGS

A. All Control Panels shall have short circuit current ratings at least equal to the lesser of the following, unless noted otherwise on plans:
   1. The short circuit current rating of the electrical distribution equipment that feeds the Control Panel.
   2. 150% of the available fault current at the Control Panel as determined by a Short Circuit Current study prepared by a licensed professional electrical engineer.

B. All equipment/devices installed within control panels shall be rated to operate in ambient temperatures of 50 degrees C (122 degrees F) or higher.

2.3. ENCLOSURES

A. All enclosures (with any required accessories or auxiliary items) shall fit within the space shown on the Plans. Any costs associated with furnishing equipment which exceeds the available space shall be borne by the Contractor.

B. Enclosures (with any required accessories or auxiliary items) shall be suitable for the environment where installed.

C. Enclosure materials shall be as follows unless noted otherwise:
   1. Control Stations:
      a. Where located in extremely corrosive areas (chlorine rooms, fluoride rooms, etc.): NEMA 4X of non-metallic construction (with non-metallic hardware) compatible with the associated chemical(s).
      b. Where located in other wet, process or outdoor areas: NEMA 4X of type 304 stainless steel construction (with stainless steel hardware).
      c. Where located in dry, non-process, indoor areas (such as electrical rooms): NEMA 1 of die cast zinc/aluminum construction.
   2. Control Panels:
      a. Where located in extremely corrosive areas (chlorine rooms, fluoride rooms, etc.): NEMA 4X of non-metallic construction (with non-metallic hardware) compatible with the associated chemical(s).
      b. Where located in other wet, process or outdoor areas: NEMA 4X of type 316 stainless steel construction (with stainless steel hardware).
      c. Where located in dry, non-process, indoor areas (such as electrical rooms): NEMA 1 or 12.

D. Control Panel Enclosure Construction:
   1. Non-metallic control panel enclosure material, where specified, shall be reinforced polyester resin or equivalent, with a minimum thickness of 3/16 inch for all surfaces except those requiring reinforcement. Panels shall be precision molded to form a one piece unit with all corners rounded. Exterior surfaces shall be gel-coated to provide a corrosion-resistant maintenance-free satin finish which shall never need painting. Color pigments shall be molded into the resin. Color shall be grey.
   2. Metallic control panel enclosures, where specified, shall be fabricated using a minimum of 14 gauge steel for wall or frame mounted enclosures and a minimum of 12 gauge for freestanding enclosures. Continuously weld all exterior seams and grind smooth. Reinforce sheet steel with steel angles where necessary support equipment and ensure rigidity and preclude resonant vibrations.
   3. Use pan-type construction for doors.
   4. Door widths shall not exceed 36-inches.
   5. Mount doors with full length, heavy duty piano hinge with hinge pins.
   6. Provide gasket completely around each door opening.
   7. Mount and secure all internal components to removable back plate assembly.
   8. For NEMA 1 or 12 enclosures, provide handle-operated key-lockable three point stainless steel latching system for each door.
   9. For NEMA 4X enclosures, provide provisions for padlocking all doors and provide clamps on three (3) sides of each door.

2.4. CONTROL PANEL ACCESSORIES:

A. Cooling systems shall be provided if so required by the application to maintain temperatures within the acceptable ranges of the interior equipment. In no case (regardless of temperature ratings of internal equipment) shall maximum temperatures within control panels be allowed to exceed 50 degrees C (122 degrees F). Thermostats shall be provided to control cooling without need of manual operation. Thermostat setpoints shall be as per recommendations of the equipment suppliers. See above for thermal calculation requirements. Cooling units shall be as manufactured by Hoffman Engineering Co., Rittal or approved equal and shall be thermostatically controlled.

B. Space heaters shall be provided for condensation and temperature control. Thermostats AND hygrostats (or combination hygrotherm controllers) shall be provided to control heating requirements (based on temperature and relative humidity within enclosure) without need of manual operation. Setpoints shall be as per recommendations of the equipment suppliers. See above for thermal calculation requirements. Space heaters and associated control devices shall be as manufactured by Hoffman Engineering Co., Rittal, Stego or approved equal.

C. NEMA 4X control panels shall be provided with vapor-phase corrosion inhibitor(s) (chemical combinations that vaporize and condense on all surfaces in the enclosed area, to protect metal surfaces/devices within the enclosed area from corrosion). Corrosion inhibitor shall be Hoffman #AHCI series (sized as required by the enclosure volume to be protected) or equal.

D. For outdoor panels, stainless steel solar shields for front, top and each side of panel, supported to associated panel face with standoffs as required (to allow free air flow between solar shield and panel enclosure), shall be provided where required to limit solar loading on panel to allow use of a ventilated panel design rather than an air-conditioned panel design.

E. Provide a sun shield over all LCD displays in exterior-mounted panels. Sun shield shall be collapsible to fully protect LCD display from UV light when not in use, shall provide side and top shielding when in use, shall be constructed of stainless steel and shall be installed such as to maintain NEMA 4X ratings of enclosures.

F. Provide a clear polycarbonate gasketted hinged door or window to encompass all indicators, controllers, recorders, etc. mounted on NEMA 4 and 4X enclosures.

G. Provide interior mounting panels and shelves constructed of minimum 12 gauge steel with white enamel finish. Provide metal print pocket with white enamel finish on inside of door.

H. Provide interior LED light kit, mounted at top of interior of panel, and switched to turn “ON” when door is opened for the following control panels:
   1. Control panels with outer dimensions greater than 20” wide or 30” high.
   2. Control panels containing PLCs or other similar programmable devices.

I. Control panels containing VFDs or Reduced Voltage Soft Starters shall include a door mounted digital keypad for adjusting the starter parameters and viewing process values and viewing the motor and starter statuses without opening the enclosure deadfront door.

2.5. CONTROL COMPONENTS

A. General:

1. All pushbuttons, pilot lights, selector switches and other control devices shall be separate, standard size (full 30mm) and shape, heavy duty oil-tight units.
   a. Devices in extremely corrosive areas (chlorine rooms, fluoride rooms, etc.) shall be of non-metallic construction.
   b. Devices in other areas shall be of chrome-plated construction.
2. All components and devices so that connection can be easily made and so there is ample room for servicing each item.
3. Door-mounted indicators, recorders, totalizers and controllers shall be located between 48" and 72" above finished floor level.
4. Door-mounted indicator lights, selector switches and pushbuttons shall be located between 36" and 80" above finished floor level.
5. All devices and components shall be adequately supported to prevent movement. Mounting strips shall be used to mount relays, timers and other devices suitable for this type of mounting.

B. Pilot Lights:
1. All pilot lights to be cluster LED type & push to test.

C. Pushbuttons:
1. All STOP operators within control stations located at equipment shall be provided with lockout provisions and a minimum of two (2) sets of contact blocks.
2. Emergency shutoff pushbutton devices shall be as follows unless noted otherwise:
   a. 2 ¼" diameter, mushroom-style, maintained contact push buttons
   b. With a minimum of one (1) normally open dry contact and three normally closed dry contacts.
   c. Connections made such that pushing "in" the button will shutoff the associated equipment.
   d. Provided with a red engraved nameplate with ½" lettering to read "Emergency Shutoff".

D. Relays:
1. Control relays shall have the following characteristics, unless noted otherwise:
   a. General purpose, plug-in type.
   b. Minimum mechanical life of 10 million operations.
   c. Coil voltage as indicated or required by application.
   d. Single-break contacts rated 12 amperes, resistive at 240 volts.
   e. Contacts as shown on wiring diagrams plus a minimum of one (1) spare N.O. contact and one (1) spare N.C. contact. At a minimum, each individual relay shall have 3PDT contacts. Where required, multiple control relays shall be provided (to provide the required quantities of contacts) for each "relay" function shown on plans/diagrams.
   f. Furnished with RC transient suppressor to suppress coil-generated transients to 200% of peak voltage.
   g. LED on/off indicator light and manual operator.
   h. Industry standard wiring and pin terminal arrangements.
   i. Equal to Square D 8501KP series with matching plug-in socket.
2. Interposing/isolation relays used to isolate discrete output field wiring (and where required for voltage translation for other discrete signals) to/from PLC inputs/outputs

shall be terminal-block style. Terminal-block style relays shall have the following characteristics, unless noted otherwise:

a. Minimum mechanical life of 10 million operations.
b. Single-break contacts rated 6 amperes, resistive at 120 volts.
c. One (1) N.O. contact per relay.
d. Furnished with integral transient protection.
e. LED on/off indicator light.
f. DIN-rail mounted.
g. Equal to Square D type Zelio RSL.

3. Timer relays shall be electronic, adjustable plug-in devices meeting the following characteristics, unless noted otherwise:

a. General purpose, plug-in type.
b. Minimum mechanical life of 10 million operations.
c. Single-break contacts rated 10 amperes, resistive at 240 volts.
d. Contacts as shown on wiring diagrams plus a minimum of one (1) spare N.O. contact and one (1) spare N.C. contact. At a minimum, each relay shall have DPDT contacts (2 N.O. & 2N.C.). Where required, multiple timer or control relays shall be provided (to provide the required quantities of contacts) for each "relay" function shown on plans/diagrams.
e. Rotary-thumbwheel adjustments for time value, timing range and function.
f. Time value adjustments from .05 seconds to 999 hours
g. Selectable Timing Functions, including the following:
   1) On Delay
   2) Interval
   3) Off Delay
   4) One Shot
   5) Repeat Cycle-Off
   6) Repeat Cycle-On
   7) On/Off Delay
   8) One Shot Falling Edge
   9) Watchdog
   10) Trigger On Delay
h. Accuracy shall be $\pm$ 2% and repeatability shall be $\pm$ 0.1%.
i. Furnished with integral transient protection.
j. LED indicator light(s) for "timing" and "on/off status"
k. Held in place with hold-down spring
l. Equal to Square D type JCK with matching plug-in socket.

2.6. DC POWER SUPPLIES

A. DC Power supplies shall be provided where specified elsewhere, or as required by design of system. Power supplies shall be industrial type, AC-to-DC switching, output voltage as required, 120vac input, size as required for the initial application plus 50% spare capacity.

B. Redundant power supplies with diode isolation shall be provided so that the loss of one power supply does not affect system operation. The back-up supply systems shall be designed so that either the primary or the back-up supply can be removed, repaired, and returned to service without disrupting the system operation.

C. Power supply output shall be protected by secondary overcurrent protection device(s).

D. The power distribution from multiloop supplies shall be selectively fused so that a fault in one instrument loop will be isolated from the other loops being fed from the same supply.

E. Each power supply shall meet the following requirements.
1. Regulation, line: 0.4% for input from 105 to 132vac.
2. Regulation, load: 0.8%
3. Ripple/Noise: 15mV RMS / 200 mV peak to peak
4. Operating temperature range: 0 deg C - 60 deg C
5. Overvoltage protection
6. Overload Protection
7. Output shall remain within regulation limits for a least 16ms after loss of AC power at full load.
8. Output status indicator.
9. UL listing

F. Power supplies shall be manufactured by Puls, Sola, Phoenix Contact or equal.

2.7. UNINTERRUPTIBLE POWER SUPPLIES

A. Uninterruptible power supplies (UPSs) shall be provided where specified elsewhere, or as required by design of system. Power supplies shall be industrial type, size as required for the initial application plus 50% spare capacity unless noted otherwise.

B. Battery runtime shall be as specified elsewhere. If no other specification for battery runtime is specified, battery runtime shall be 12.5 minutes at full load.

C. UPSs shall be double-conversion, on-line type.

D. UPSs shall be rated for operation in -20 degrees C to 55 degrees C ambient temperatures.

E. UPS batteries shall be hot-swappable and 12-year rated when installed in 25 degrees C environment and 4-year rated when installed in 50 degrees C environment.

F. UPSs shall include dry contacts for the following alarm points:
1. Loss of Input Power Alarm
2. Low Battery Alarm

G. UPSs shall be manufactured by Falcon UPS or approved equal.

2.8. DISCONNECTS

A. A main disconnect switch or circuit breaker shall be supplied integral to all control panels. The main disconnect or circuit breaker shall be accessible/operable without exposing the operator to energized sections of the control panel(s).

B. Individual circuit breakers shall be provided integral to the manufactured control panel for each separate power circuit originating within the control panel.

C. Where the highest continuous current trip setting for which the actual overcurrent device installed in a circuit breaker is rated (or can be adjusted to is 1200A or higher, breakers shall be electronic trip and shall be provided with arc energy-reducing maintenance switching (with local status indicator) to reduce arc flash energy per NEC 240.87 requirements.

2.9. COMBINATION STARTERS

A. All combination starters shall utilize a unit disconnect. Magnetic starters shall be furnished in all combination starter units unless specifically shown otherwise. All starters shall utilize full NEMA/EEMAC rated contactors (size 1 minimum).

B. Starters shall be provided with a three-pole, external (door mounted) manual reset, solid state overload relay. Solid state overload relay shall have switch-selectable trip class and shall provide protection from:
1. Overload.
2. Phase Unbalance.
3. Phase Loss.
4. Ground Fault (Class II detection).

C. Unless specifically shown otherwise, each combination starter shall be furnished with a control circuit transformer including two primary protection fuses and one secondary fuse (in the non-ground secondary conductor). The transformer shall be sized to accommodate the contactor(s) and all connected control circuit loads (including motor space heaters and other similar loads where specified). The transformer rating shall be fully visible from the front when the unit door is opened. Unless otherwise indicated, control voltage shall be 120V AC. Control power shall be provided by individual unit control power transformers.

D. When a unit control circuit transformer is not provided, the disconnect shall include an electrical interlock for disconnection of externally powered control circuits.

E. Auxiliary control circuit interlocks shall be provided where indicated. Auxiliary interlocks shall be field convertible to normally open or normally closed operation.

F. NEMA/EEMAC Size 1-4 starters shall be mounted directly adjacent to the wireway so that power wiring (motor leads) shall connect directly to the starter terminals without the use of interposing terminals. Larger starters shall be arranged so that power wiring may exit through the bottom of the starter cubical without entering the vertical wireway.

G. Each starter shall be equipped with a minimum of the following control devices:
1. Door-mounted reset button.
2. Two (2) field-reversible (N.O./N.C.) auxiliary contacts
3. For reversing and two-speed starters: Four (4) field-reversible (N.O./N.C.) auxiliary contacts
4. Additional control devices as indicated on plans.

H. Terminal Blocks
1. Wiring within all units shall be type B, with unit-mounted control terminal blocks for each field wire.

2. Terminal blocks shall be the pull-apart type 600 volt and rated at 25 amps. All current carrying parts shall be tin plated. Terminals shall be accessible from inside the unit when the unit door is opened. Terminal blocks shall be DIN rail mounted with the stationary portion of the block secured to the unit bottom plate. The stationary portion shall be used for factory connections, and shall remain attached to the unit when removed. The terminals used for field connections shall face forward so they can be wired without removing the unit or any of its components.

I. Nameplates
1. Each unit shall be properly labeled with an engraved phenolic nameplate with a white background and black letters.
2. Each pilot device shall be properly labeled with a legend plate or an engraved phenolic nameplate.

2.10. WIRING

A. Refer to Section 260519 for all wiring types/applications.

B. All wiring shall be identified on each end with hot stamped, shrink tube type, or self-laminating vinyl permanent wire markers to correspond with numbering shown on wiring diagrams.

C. All connections shall be made on terminals with no splices.

D. All wiring runs shall be along horizontal or vertical routes to present a neat appearance. Angled runs will not be acceptable. Group or bundle parallel runs of wire in plastic wire duct where practical.

E. All wiring runs shall be securely fastened to the panel or wire duct by means of plastic wire ties. Adequately support and restrain all wire runs to prevent sagging or movement.

F. AC power wiring and instrumentation/analog wiring shall be run separate.

G. Color code all internal wiring (not field wiring) as follows:
1. Line and load circuits: Black (B)
2. AC control wiring: Red (R)
3. Externally-Powered control wiring: Yellow (Y)
4. Neutral wiring: White (W)
5. Low voltage DC(+)pos: Blue (BL)
6. Low voltage DC(-)neg: Blue/White Tracer (BL/W)
7. Grounding: Green/Yellow Tracer (G/Y)

H. Terminal strips shall be provided for all input and output wiring. No more than two (2) wires shall be connected to one (1) terminal block.

2.11. ELECTRICAL SURGE AND TRANSIENT PROTECTION

A. General
1. Function: Protect the system against damage due to electrical surges.

B. Application: As a minimum, provide surge and transient protection (with proper grounding) at the following locations as described below:
   1. Power Input:
      a. Provide surge protection device at any connection of 120VAC power to panels containing programmable logic controllers, remote I/O equipment, UPS's, transmitters, radios, VFDs, Reduced Voltage Soft Starters or other electronic equipment. Device shall:
         1) Be mounted internal to the associated panel, with dedicated overcurrent protection.
         2) Be of two-part (base and SPD), DIN-rail mountable construction.
         3) Have 15kA total nominal discharge current per line (based on 8/20µs waveform).
         4) Have maximum continuous operating voltage (MCOV) rating as required by the associated circuit voltage.
         5) Visually indicate operational status.
         6) Be Dehn DEHNguard series or equal by MTL Technologies.
      b. Provide surge protection device at any connection of multi-pole AC power to panels containing programmable logic controllers, remote I/O equipment, UPS's, transmitters, radios, VFDs, Reduced Voltage Soft Starters or other electronic equipment. Device shall:
         1) Be mounted internal to the associated panel, with dedicated overcurrent protection.
         2) Provide protection for all phases.
         3) Have 40kA (per phase) peak surge current rating.
         4) Have maximum continuous operating voltage (MCOV) rating as required by the associated circuit voltage.
         5) Visually indicate operational status.
         6) Be Square D SDSA or HWA series or equal.
   2. Analog I/O Panel Terminations:
      a. Provide surge protection device at the PLC (or similar) panel connection of each analog I/O signal. Device shall:
         1) Be mounted internal to the associated panel.
         2) Be of two-part (base and SPD), DIN-rail mountable construction.
         3) Have 10kA total nominal discharge current per line (based on 8/20µs waveform).
         4) Have maximum continuous operating voltage (MCOV) rating as required by the associated signal.
         5) Be Dehn Blitzductor XT series or equal by MTL Technologies.
   3. Discrete I/O Panel Terminations:
      a. Provide isolation relay at the PLC (or similar) panel connection of each discrete output signal (within the associated panel). See above for isolation relay requirements.
   4. Network Panel Terminations:
      a. Provide surge protection device at the PLC (or similar) panel connection of each network cable. Device shall:
         1) Be mounted internal to the associated panel.
         2) Be of DIN-rail mountable construction.

3) Have 1kA total nominal discharge current per line (based on 8/20µs waveform).
4) Be designed specifically for the associated network connection type (Ethernet, RS485, RS232, etc.).
5) Be MTL Zonebarrier series or equal.

5. Antenna Cable Terminations:
   a. Provide surge protection device at the connection of antenna cable to the radio panel. Device shall:
      1) Be mounted internal to the associated panel.
      2) Provide coarse protection via replaceable gas-filled surge voltage arrestor
      3) Be Phoenix Contact COAXTRAB series or equal.

C. Installation and grounding of suppressor: As directed by manufacturer. Provide coordination and inspection of grounding.

PART 3 - EXECUTION

3.1. INSTALLATION

A. Provide enclosure mounting supports as required for floor, frame or wall mounting. All supports in exterior, wet or process areas shall be stainless steel unless noted otherwise. All floor-mounted panels or other similar distribution equipment shall be mounted on 6" concrete housekeeping pads unless specifically shown otherwise.

B. All enclosures used outside shall be solid bottom unless otherwise specified. All cable and piping openings shall be sealed watertight. Cable and piping shall enter the enclosure as shown on drawings or specified herein.

C. All equipment and components shall be solidly grounded to the control panel. One grounded terminal unit shall be provided in each control panel for connection to plant ground system. Grounding digital and analog components shall be performed in accordance with the instrument supplier's installation recommendations. Signal ground shall be solidly connected to the ground system so as to prevent ground loops

3.2. PAINTING

A. For enclosures other than NEMA 4X stainless steel or fiberglass:
   1. Completely clean all surfaces so that they are free of corrosive residue. Then, phosphatize all surfaces for corrosion protection.
   2. Prime with two (2) coats and finish with one coat of factory finish textured polyurethane. Paint shall be Sherwin-Williams Polane "T' or approved equal.
   3. Color to be selected during shop drawing review phase.

3.3. IDENTIFICATION & DOCUMENTATION

A. Refer to specification section 260553 for additional requirements.

B. Control panel power supply source, type, voltage, number or circuit ratings shall be identified inside control panels and on drawings.

C. All interior devices and components shall be identified with thermal transfer labels with black letters on white background. Labels shall be placed on the subpanel and not the component. Marking system shall be a Brother “PTouch II” or equal. Lettering shall be 1/4" high.

D. All front panel mounted devices such as push buttons shall be identified by the use of engraved bakelite nameplates or legend plates. Nameplates shall be 1/8” thick, white with black core.

E. A job-specific, custom wiring diagram for each control panel (not including control stations without relays) shall be provided to the contractor prior to installation for making the appropriate electrical connections. The wiring diagram shall clearly show all control components connected to the panel (whether the components are mounted internal or external to the enclosure). All wires and terminal blocks shall be clearly labeled. A laminated copy of the final wiring diagram for each unit shall be installed inside the door of the associated panel, and submitted to the owner with the as-built documentation.

3.4. OWNER TRAINING

A. Fully train the owner in the proper operation of all control panels/equipment, describing and demonstrating full operation, including function of each door-mounted device.

3.5. SPARE EQUIPMENT

A. Provide the following spare equipment:
   1. Fuses: 10% (minimum of 3) of each size and type utilized, mounted within a pocket within the associated control panel.
   2. Where control panel contains programmable controller (or similar equipment): Flash drive containing copies of all final programs utilized within the control panel, with provisions/cable assemblies as required to connect the flash drive provided to the controller to download the programs. Flash drive shall be attached to retractable cord (long enough to reach the associated port) attached to the inside of the panel door.

END OF SECTION 262900

SECTION 263213 - GENERATOR SETS

PART 1 - GENERAL

1.1. SCOPE

A. Provide complete factory assembled generator set equipment with digital (microprocessor-based) electronic generator set controls, digital governor, and digital voltage regulator.

B. Provide factory test, startup by a supplier authorized by the equipment manufacturer(s), and on-site testing of the system.

C. The generator set manufacturer shall warrant all equipment provided under this section, whether or not is manufactured by the generator set manufacturer, so that there is one source for warranty and product service. Technicians specifically trained and certified by the manufacturer to support the product and employed by the generator set supplier shall service the generator sets.

1.2. CODES AND STANDARDS

A. The generator set installation and on-site testing shall conform to the requirements of the following codes and standards, as applicable. The generator set shall include necessary features to meet the requirements of the latest editions of the following standards/codes where applicable:
1. CSA 282, 1989 Emergency Electrical Power Supply for Buildings
2. IEEE446 – Recommended Practice for Emergency and Standby Power Systems for Commercial and Industrial Applications
3. International Building Codes.
4. NFPA70 – National Electrical Code. Equipment shall be suitable for use in systems in compliance to Article 700, 701, and 702.
5. NFPA99 – Essential Electrical Systems for Health Care Facilities.
6. NFPA110 – Emergency and Standby Power Systems. The generator set shall meet all requirements for Level 1 systems. Level 1prototype tests required by this standard shall have been performed on a complete and functional unit, component level type tests will not substitute for this requirement.

B. The generator set and supplied accessories shall meet the requirements of the latest editions of the following standards where applicable:
1. NEMA MG1-1998 part 32. Alternator shall comply with the requirements of this standard.
2. UL142 – Sub-base Tanks
3. UL1236 – Battery Chargers
4. UL2200. The generator set shall be listed to UL2200 or submit to an independent third party certification process to verify compliance as installed.

C. The generator set and supplied accessories shall meet all applicable Environmental Protection Agency (EPA) TIER Emission Level or Emission Certification requirements in effect at the

time the generator set is ordered.

D. The control system for the generator set shall comply with the following requirements.
   1. CSA C22.2, No. 14 – M91 Industrial Control Equipment.
   2. EN50082-2, Electromagnetic Compatibility – Generic Immunity Requirements, Part 2: Industrial.
   3. EN55011, Limits and Methods of Measurement of Radio Interference Characteristics of Industrial, Scientific and Medical Equipment.
   4. FCC Part 15, Subpart B.
   5. IEC8528 part 4. Control Systems for Generator Sets
   6. IEC Std 801.2, 801.3, and 801.5 for susceptibility, conducted, and radiated electromagnetic emissions.
   7. UL508. The entire control system of the generator set shall be UL508 listed and labeled.
   8. UL1236 –Battery Chargers.

E. The generator set manufacturer shall be certified to ISO 9001 International Quality Standard and shall have third party certification verifying quality assurance in design/development, production, installation, and service, in accordance with ISO 9001.

1.3. ACCEPTABLE MANUFACTURERS

A. Cummins/Onan (Basis of Design)

B. Caterpillar

C. Generac

D. Kohler

PART 2 - PRODUCTS

2.1. GENERATOR SET

A. Ratings
   1. The generator set assembly (including both the motor/engine assembly and the generator assembly) shall operate at 1800 rpm, and the generator shall produce a 60 Hz waveform.
   2. Voltage and phase ratings shall be as shown on plans.
   3. Minimum kW rating (and associated alternator sizing) shall be the greater of the following:
      a. Minimum kW rating listed on plans.
      b. Ratings required to provide skVA as follows (shall be documented with reports in submittals using generator sizing software described in Part 3 below):
         1) If so listed on plans, the step loads fed by the generator at voltage/frequency dip criteria specified.
         2) If so listed on plans, the skVA rating specified.
         3) If neither of the above are listed on plans, generator shall be sized to accommodate a block load of 100% of the Total Demand Load listed on plans, with a maximum voltage dip of 20% and a maximum frequency dip of 10%.

4. kVA rating shall be 1.25 times the kW rating (based on .8 PF).
5. Unless shown otherwise on plans, the generator set shall be rated based on the following site conditions:
   a. Altitude of project site.
   b. Ambient temperatures up to 120 degrees F.
6. The generator set rating shall be based on emergency/standby service unless noted otherwise.

B. Performance
1. Voltage regulation shall be plus or minus 0.5 percent for any constant load between no load and rated load. Random voltage variation with any steady load from no load to full load shall not exceed plus or minus 0.5 percent.
2. Frequency regulation shall be isochronous from steady state no load to steady state rated load. Random frequency variation with any steady load from no load to full load shall not exceed plus or minus 0.5%.
3. The engine-generator set shall be capable of accepting a single step load of 100% nameplate kW and power factor, less applicable derating factors, with the engine-generator set at operating temperature.
4. Minimum motor starting capability shall be as shown on plans. The generator set shall be capable of recovering to a minimum of 90% of rated no load voltage following the application of the specified skVA load at near zero power factor applied to the generator set. Maximum voltage dip on application of this load, considering both alternator performance and engine speed changes shall not exceed 20% unless shown otherwise on plans.
5. The alternator shall produce a clean AC voltage waveform, with not more than 5% total harmonic distortion at full linear load, when measured from line to neutral, and with not more than 3% in any single harmonic, and no 3rd order harmonics or their multiples. Telephone influence factor shall be less than 40.
6. The generator set shall be certified by the engine manufacturer to be suitable for use at the installed location and rating, and shall meet all applicable exhaust emission requirements at the time of commissioning.

C. Construction
1. The engine-generator set shall be mounted on a heavy-duty steel base to maintain alignment between components. The base shall incorporate a battery tray with hold-down clamps within the rails.
2. The engine-generator set shall be rated for the seismic conditions for the installation location as mapped by the US Geological Survey and required by local building codes.
3. All switches, lamps, and meters in the control system shall be oil-tight and dust-tight. All active control components shall be installed within a UL/NEMA 3R enclosure. There shall be no exposed points in the control (with the door open) that operate in excess of 50 volts.

D. Connections
1. The generator set load connections shall be composed of silver or tin plated copper bus bars, drilled to accept compression terminations of the number and size as shown on the drawings. Sufficient lug space shall be provided for use with cables of the number and size as shown on the drawings.

2. Power connections to auxiliary devices shall be made at the devices, with required overcurrent protection located at panelboard(s) external to the generator set unless shown otherwise on plans. Where a load center or panelboard is shown within the generator enclosure on the plans, this load center/panelboard shall be furnished with the generator and shall comply with the applicable panelboard and identification sections of this specification.
3. Generator set control interfaces to other system components shall be made on a permanently labeled terminal block assembly. Labels describing connection point functions shall be provided.

2.2. ENGINE AND ENGINE EQUIPMENT

A. The engine shall be natural gas fueled, radiator and fan cooled. The horsepower rating of the engine at its minimum tolerance level shall be sufficient to drive the alternator and all connected accessories. Two cycle engines are not acceptable. Engine accessories and features shall include:
1. Complete engine fuel system, including all pressure regulators, strainers, and control valves. The fuel system shall be plumbed to the generator set skid for ease of site connections to the generator set. For dual fuel systems, changeover from primary to secondary fuel shall be automatic.
2. An electronic governor system shall provide automatic isochronous frequency regulation. The governing system dynamic capabilities shall be controlled as a function of engine coolant temperature to provide fast, stable operation at varying engine operating temperature conditions. The control system shall actively control the fuel rate and excitation as appropriate to the state of the generator set. Fuel rate shall be regulated as a function of starting, accelerating to start disconnect speed, accelerating to rated speed and operating in various isochronous or parallel states. The governing system shall include a programmable warm up at idle and cooldown at idle function. While operating in idle state, the control system shall disable the alternator excitation system.
3. Skid-mounted radiator and cooling system rated for full load operation in 120 degrees F (49 degrees C) ambient as measured at the generator air inlet. Radiator fan shall be suitable for use in a system with 0.5 in H_2O restriction. Radiator shall be sized based on a core temperature that is 20F higher than the rated operation temperature, or prototype tested to verify cooling performance of the engine/radiator/fan operation in a controlled environment. Radiator shall be provided with a duct adapter flange. The equipment manufacturer shall fill the cooling system with a 50/50-ethylene glycol/water mixture prior to shipping. Rotating parts shall be guarded against accidental contact.
4. Electric starter(s) capable of three complete cranking cycles without overheating.
5. Positive displacement, mechanical, full pressure, lubrication oil pump.
6. Full flow lubrication oil filters with replaceable spin-on canister elements and dipstick oil level indicator.
7. Replaceable dry element air cleaner with restriction indicator.
8. Flexible fuel lines.
9. Engine mounted battery charging alternator and solid-state voltage regulator.
10. Block heater
    a. Engine mounted, thermostatically controlled, block heater(s) for each engine. Heater voltage shall be as shown on the project drawings. The coolant heater shall be UL499 listed and labeled.

b. The block heater shall be installed on the engine with silicone hose connections. Steel tubing shall be used for connections into the engine coolant system wherever the length of pipe run exceeds 12 inches. The block heater installation shall be specifically designed to provide proper venting of the system. The block heaters shall be installed using quick disconnect couplers to isolate the heaters for replacement of the heater element without draining the coolant from the generator set. The quick disconnect/automatic sealing couplers shall allow the heater element to be replaced without draining the engine cooling system or significant coolant loss.

c. The block heater shall be provided with a DC thermostat, installed at the engine thermostat housing. An AC power connection box shall be provided for a single AC power connection to the block heater system.

d. The block heater(s) shall be sized as recommended by the engine manufacturer to warm the engine to a minimum of 104F (40C) in a 40F (4C) ambient, in compliance with NFPA110 requirements, or the temperature required for starting and load pickup requirements of this specification. If the heater quantities or wattage ratings are different than shown on plans, contractor shall be responsible for providing the properly-rated circuits (with circuit breakers) as required to the heater(s).

11. Provide vibration isolators, spring & pad type, quantity as recommended by the generator set manufacturer. Isolators shall include seismic restraints if required by site location.

12. Starting and Control Batteries shall be calcium/lead antimony type, 24 volt DC, sized as recommended by the engine manufacturer, complete with battery cables and connectors. The batteries shall be capable of a minimum of three complete 15-second cranking cycles at 40F ambient temperature when fully charged.

13. Provide critical-grade exhaust silencer(s) for each engine of size and type as recommended by the generator set manufacturer and approved by the engine manufacturer. Exhaust system shall be installed according to the engine manufacturer's recommendations and applicable codes and standards.

14. A UL listed/CSA certified voltage regulated battery charger shall be provided for each engine-generator set. The charger shall be located at the generator unless shown otherwise on plans. Output amperage, Input AC voltage and DC output voltage shall be as required. Chargers shall be equipped with float, taper and equalize charge settings. Charger shall include an Analog DC voltmeter and ammeter, 12 hour equalize charge timer, and AC and DC fuses. Operational monitors shall provide visual output along with individual form C contacts rated at 4 amps, 120 VAC, 30VDC for remote indication of:

    a. Loss of AC power - red light
    b. Low battery voltage - red light
    c. High battery voltage - red light
    d. Power ON - green light and N.O. relay contact

2.3. AC GENERATOR

A. The AC generator shall be; synchronous, four pole, 2/3 pitch, revolving field, drip-proof construction, single pre-lubricated sealed bearing, air cooled by a direct drive centrifugal blower fan, and directly connected to the engine with flexible drive disc. All insulation system components shall meet NEMA MG1 temperature limits for Class H insulation system and shall

be UL1446 listed. Actual temperature rise measured by resistance method at full load shall not exceed 105 degrees Centigrade.

B. The generator shall be capable of delivering rated output (kVA) at rated frequency and power factor, at any voltage not more than 5 percent above or below rated voltage.

C. A permanent magnet generator (PMG) shall be included to provide a reliable source of excitation power for optimum motor starting and short circuit performance. The PMG and controls shall be capable of sustaining and regulating current supplied to a single phase or three phase fault at approximately 300% of rated current for not more than 10 seconds.

D. AC generator shall be 12-lead reconnectable type to provide the following voltage output configurations:
   1. 277/480V-3Phase-4Wire
   2. 120/208V-3Phase-4Wire
   3. 120/240V-3Phase-4Wire
   4. 120/240V-1Phase-3Wire

E. The subtransient reactance of the alternator shall not exceed 12 percent, based on the standby rating of the generator set.

2.4. GENERATOR SET CONTROL

A. The generator set shall be provided with a microprocessor-based control system that is designed to provide automatic starting, monitoring, and control functions for the generator set. The control system shall also be designed to allow local monitoring and control of the generator set, and remote monitoring and control as described in this specification.

B. The control shall be mounted on the generator set, or may be mounted in a free-standing panel next to the generator set if adequate space and accessibility is available. The control shall be vibration isolated and prototype tested to verify the durability of all components in the system under the vibration conditions encountered.

C. The generator set mounted control shall include the following features and functions:
   1. Control Switches
      a. Mode Select Switch. The mode select switch shall initiate the following control modes. When in the RUN or MANUAL position the generator set shall start, and accelerate to rated speed and voltage as directed by the operator. A separate push-button to initiate starting is acceptable. In the OFF position the generator set shall immediately stop, bypassing all time delays. In the AUTO position the generator set shall be ready to accept a signal from a remote device to start and accelerate to rated speed and voltage.
      b. EMERGENCY STOP switch. Switch shall be Red "mushroom-head" push-button. Depressing the emergency stop switch shall cause the generator set to immediately shut down, and be locked out from automatic restarting.
      c. RESET switch. The RESET switch shall be used to clear a fault and allow restarting the generator set after it has shut down for any fault condition.

d. PANEL LAMP switch. Depressing the panel lamp switch shall cause the entire panel to be lighted with DC control power. The panel lamps shall automatically be switched off 10 minutes after the switch is depressed, or after the switch is depressed a second time.

2. Generator Set AC Output Metering. The generator set shall be provided with a metering set including the following features and functions:
   a. Analog voltmeter, ammeter, frequency meter, power factor meter, and kilowatt (KW) meter. Voltmeter and ammeter shall display all three phases. Meter scales shall be color coded in the following fashion: green shall indicate normal operating condition, amber shall indicate operation in ranges that indicate potential failure, and red shall indicate failure impending. Metering accuracy shall be within 1% at rated output.
   b. The control system shall monitor the total load on the generator set, and maintain data logs of total operating hours at specific load levels ranging from 0 to 110% of rated load, in 10% increments. The control shall display hours of operation at less than 30% load and total hours of operation at more than 90% of rated load.
   c. The control system shall log total number of operating hours, total kWH, and total control on hours, as well as total values since reset.
3. Generator Set Alarm and Status Display.
   a. The generator set control shall include LED alarm and status indication lamps. The lamps shall be high-intensity LED type. The lamp condition shall be clearly apparent under bright exterior day lighting conditions.
   b. The generator set control shall indicate the existence of the warning and shutdown conditions on the control panel. Conditions required to be annunciated shall include:
      1) low oil pressure (warning)
      2) low oil pressure (shutdown)
      3) oil pressure sender failure (warning)
      4) low coolant temperature (warning)
      5) high coolant temperature (warning)
      6) high coolant temperature (shutdown)
      7) high oil temperature (warning)
      8) engine temperature sender failure (warning)
      9) low coolant level (warning or shutdown - selectable)
      10) fail to crank (shutdown)
      11) fail to start/overcrank (shutdown)
      12) overspeed (shutdown)
      13) low DC voltage (warning)
      14) high DC voltage (warning)
      15) weak battery (warning)
      16) high AC voltage (shutdown)
      17) low AC voltage (shutdown)
      18) under frequency (shutdown)
      19) over current (warning)
      20) over current (shutdown)
      21) short circuit (shutdown)
      22) ground fault (warning) (if genset breaker is rated 1000A or greater)

23) over load (warning)
24) Genset circuit breaker tripped (warning)
25) emergency stop (shutdown)

4. Engine Status Monitoring.
   a. The following information shall be available from an analog status panel on the generator set control :
      1) engine oil pressure (psi or kPA)
      2) engine coolant temperature (degrees F or C)
      3) battery voltage (DC volts)
5. Engine Control Functions.
   a. The control system provided shall include a cycle cranking system, which allows for user selected crank time, rest time, and # of cycles. Initial settings shall be for 3 cranking periods of 15 seconds each, with 15 second rest period between cranking periods.
   b. The control system shall include an idle mode control, which allows the engine to run in idle mode in the RUN position only. In this mode, the alternator excitation system shall be disabled.
   c. The control system shall include an engine governor control, which functions to provide steady state frequency regulation as noted elsewhere in this specification. The governor control shall include adjustments for gain, damping, and a ramping function to control engine speed and limit exhaust smoke while the unit is starting.
   d. The control system shall include time delay start (adjustable 0-300 seconds) and time delay stop (adjustable 0-600 seconds) functions.
   e. The control system shall include sender failure monitoring logic for speed sensing, oil pressure, and engine temperature which is capable of discriminating between failed sender or wiring components, and an actual failure conditions.
6. Alternator Control Functions:
   a. The generator set shall include an automatic digital voltage regulation system that is matched and prototype tested by the engine manufacturer with the governing system provided. It shall be immune from misoperation due to load-induced voltage waveform distortion and provide a pulse width modulated output to the alternator exciter. The voltage regulation system shall be equipped with three-phase RMS sensing and shall control buildup of AC generator voltage to provide a linear rise and limit overshoot. The system shall include a torque-matching characteristic, which shall reduce output voltage in proportion to frequency below an adjustable frequency threshold. Torque matching characteristic shall be adjustable for roll-off frequency and rate, and be capable of being curve-matched to the engine torque curve with adjustments in the field. The voltage regulator shall include adjustments for gain, damping, and frequency roll-off. Adjustments shall be broad range, with local indication of setting level.
   b. Controls shall be provided to monitor the output current of the generator set and initiate an alarm (over current warning) when load current exceeds 110% of the rated current of the generator set on any phase for more than 60 seconds. The controls shall shut down and lock out the generator set when output current level approaches the thermal damage point of the alternator (over current

shutdown). The protective functions provided shall be in compliance to the requirements of NFPA70 article 445.

c. Controls shall be provided to individually monitor all three phases of the output current for short circuit conditions. The control/protection system shall monitor the current level and voltage. The controls shall shut down and lock out the generator set when output current level approaches the thermal damage point of the alternator (short circuit shutdown). The protective functions provided shall be in compliance to the requirements of NFPA70 article 445. This protection may be provided using a microprocessor-based programmable relay system designed to protect the alternator system from damage, or using programmable electronic-trip LSI breaker(s), programmed/set by the generator supplier to ensure full protection of the alternator system.

d. Controls shall be provided to monitor the KW load on the generator set, and initiate an alarm condition (over load) when total load on the generator set exceeds the generator set rating for in excess of 5 seconds. Controls shall include a load shed control, to operate a set of dry contacts (for use in shedding customer load devices) when the generator set is overloaded.

e. An AC over/under voltage monitoring system that responds only to true RMS voltage conditions shall be provided. The system shall initiate shutdown of the generator set when alternator output voltage exceeds 110% of the operator-set voltage level for more than 10 seconds, or with no intentional delay when voltage exceeds 130%. Under voltage shutdown shall occur when the output voltage of the alternator is less than 85% for more than 10 seconds.

f. When required by National Electrical Code or indicated on project drawings, the control System shall include a ground fault monitoring relay. The relay shall be adjustable from 3.8-1200 amps, and include adjustable time delay of 0-10.0 seconds. The relay shall be for indication only, and not trip or shut down the generator set. Note bonding and grounding requirements for the generator set, and provide relay that will function correctly in system as installed.

7. Other Control Functions

a. The generator set shall communicate with the Automatic Transfer Switch via hardwired control connections as required.

b. A battery monitoring system shall be provided which initiates alarms when the DC control and starting voltage is out of acceptable limits. During engine cranking (starter engaged), the low voltage limit shall be disabled, and DC voltage shall be monitored as load is applied to the battery, to detect impending battery failure or deteriorated battery condition.

8. Dry Contacts/Relays for Remote Monitoring:

a. The control system shall provide ten (10) programmable output relays. These relay outputs shall be configurable for any alarm, shutdown, or status condition monitored by the control. Five (5) of these relays shall be preconfigured (and labeled accordingly) to indicate:

1) generator set operating at rated voltage and frequency
2) common warning
3) common shutdown
4) load shed command and
5) low fuel warning.

b. A fused 20 amp 24VDC power supply circuit shall be provided for customer use. DC power shall be available from this circuit at all times from the engine starting/control batteries.

2.5. GENERATOR REMOTE MANUAL STOP STATION

A. Each generator set shall be furnished with a remote manual stop station of a type to prevent inadvertent or unintentional operation per NFPA 110 requirements.

B. Stop station pushbutton shall be red, non-illuminated, push-pull, mushroom-type, maintained-contact, 1 5/8" diameter, 30mm base, heavy-duty, oil-tight, water-tight unit) mounted within guarded enclosure to prevent inadvertent operation and labeled with engraved nameplate (white letters on red background) to read: "GENERATOR EMERGENCY STOP" (or similar with specific generator name where so identified on drawings).

C. Exact stop station type shall be coordinated with generator controls supplier to ensure a fully-functional system per NFPA 110 requirements.

2.6. GENERATOR MAIN LINE CIRCUIT BREAKER(S)

A. The generator set shall be provided with a mounted main line circuit breaker(s), sized as shown on plans. The circuit breaker(s) shall incorporate an electronic trip unit that operates to protect the alternator under all overcurrent conditions, or a thermal-magnetic trip with other overcurrent protection devices that positively protect the alternator under overcurrent conditions. The supplier shall submit time overcurrent characteristic curves and thermal damage curve for the alternator, demonstrating the effectiveness of the protection provided.

B. The main line circuit breaker(s) shall be provided with auxiliary contacts to indicate trip/off alarm conditions to the generator set control system.

2.7. OUTDOOR WEATHER-PROTECTIVE ENCLOSURE

A. The generator enclosure length and width SHALL NOT EXCEED the size indicated on electrical plans or the space allowed by the specified platform area. Generators proposed/submitted that exceed the size indicated on plans will be rejected without further review.

B. The generator set shall be provided with a weatherproof, sound-attenuated, outdoor enclosure, with the entire package listed under UL2200. The package shall comply with the requirements of the National Electrical Code for all wiring materials and component spacing. The total assembly of generator set, enclosure, and sub-base fuel tank (if applicable) shall be designed to be lifted into place using spreader bars. Housing shall provide ample airflow for generator set operation at rated load in an ambient temperature of 100F. The housing shall have hinged access doors as required to maintain easy access for all operating and service functions. All doors shall be lockable, and include retainers to hold the door open during service. Enclosure roof shall be cambered to prevent rainwater accumulation. Openings shall be screened to limit access of rodents into the enclosure. All electrical power and control interconnections shall be made within the perimeter of the enclosure.

C. The enclosure shall reduce the sound level of the generator set while operating at full rated load to a maximum of 76 dBA (including exhaust noise) at any location 7 meters from the generator set in a free field environment:

D. The enclosure shall include vertical air discharge hoods as required to redirect discharge air upwards and reduce noise accordingly.

E. The enclosure shall be insulated with non-hydroscopic materials.

F. The enclosure shall be rated for the wind and seismic conditions for the installation location as mapped by the US Geological Survey and required by local building codes.

G. All sheet metal shall be primed for corrosion protection and finish painted with the manufacturers standard color using a two step electrocoating paint process, or equal meeting the performance requirements specified below. All surfaces of all metal parts shall be primed and painted. The painting process shall result in a coating that meets the following requirements:
   1. Primer thickness, 0.5-2.0 mils. Top coat thickness, 0.8-1.2 mils.
   2. Gloss, per ASTM D523-89, 80% plus or minus 5%. Gloss retention after one year shall exceed 50%.
   3. Crosshatch adhesion, per ASTM D3359-93, 4B-5B.
   4. Impact resistance, per ASTM D2794-93, 120-160 inch-pounds.
   5. Salt Spray, per ASTM B117-90, 1000+ hours.
   6. Humidity, per ASTM D2247-92, 1000+ hours.
   7. Water Soak, per ASTM D2247-92, 1000+ hours.

H. Painting of hoses, clamps, wiring harnesses, and other non-metallic service parts shall not be acceptable. Fasteners used shall be corrosion resistant, and designed to minimize marring of the painted surface when removed for normal installation or service work.

I. Enclosure shall be constructed of minimum 12 gauge steel for framework and 14 gauge steel for panels. All hardware and hinges shall be stainless steel.

J. A factory-mounted critical exhaust silencer shall be installed inside the enclosure. The exhaust shall exit the enclosure through a rain collar and terminate with a rain cap. Exhaust connections to the generator set shall be through seamless flexible connections.

K. The enclosure shall include the following maintenance provisions:
   1. Flexible coolant and lubricating oil drain lines, that extend to the exterior of the enclosure, with internal drain valves
   2. External radiator fill provision.

L. If so shown on the plans, provide a factory-mounted and wired electrical distribution panel to serve the generator set and enclosure. The provisions required include:
   1. 100-amp distribution panelboard installed inside enclosure and fed by a 120/208VAC power feeder installed by the contractor (unless shown otherwise on plans).
   2. Two duplex GFI receptacles, one inside the enclosure, and a weatherproof receptacle on the outside of the enclosure (all factory-wired).

3. Two three-way switches controlling three AC lamps mounted in vapor tight and gasketted fixtures (all factory-wired).
4. Factory-wired normal AC service from the panelboard to the engine coolant and alternator heaters, and battery charger.

2.8. SEQUENCE OF OPERATION

A. The maximum elapsed time allowed from loss of normal power to restoration of power to emergency circuits from generator through transfer switch shall be 10 seconds.

B. Generator set shall start upon receipt of a start signal from remote equipment. The start signal shall be via hardwired connection to the generator set control.

C. The generator set shall complete a time delay start period as programmed into the control.

D. The generator set control shall initiate the starting sequence for the generator set. The starting sequence shall include the following functions:
1. The control system shall verify that the engine is rotating when the starter is signaled to operate. If the engine does not rotate after two attempts, the control system shall shut down and lock out the generator set, and indicate “fail to crank” shutdown.
2. The engine shall fire and accelerate as quickly as practical to start disconnect speed. If the engine does not start, it shall complete a cycle cranking process as described elsewhere in this specification. If the engine has not started by the completion of the cycle cranking sequence, it shall be shut down and locked out, and the control system shall indicate “fail to start”.
3. The engine shall accelerate to rated speed and the alternator to rated voltage. Excitation shall be disabled until the engine has exceeded programmed idle speed, and regulated to prevent over voltage conditions and oscillation as the engine accelerates and the alternator builds to rated voltage.
4. On reaching rated speed and voltage, the generator set shall operate as dictated by the control system in isochronous, synchronize, load share, load demand or load govern state.

E. When all start signals have been removed from the generator set, it shall complete a time delay stop sequence. The duration of the time delay stop period shall be adjustable by the operator.

F. On completion of the time delay stop period, the generator set control shall switch off the excitation system and shall shut down.

G. Any start signal received after the time stop sequence has begun shall immediately terminate the stopping sequence and return the generator set to isochronous operation.

PART 3 - EXECUTION

3.1. SUBMITTALS.

A. Within 10 days after award of contract, provide six sets of the following information for review:

1. Manufacturer's product literature and performance data, sufficient to verify compliance to specification requirements.
2. Where generator is to be fed from a dedicated natural gas fuel service, a letter from the utility source acknowledging availability of the necessary gas service along with all associated requirements of the utility provider.
3. A paragraph by paragraph specification compliance statement, describing the differences between the specified and the proposed equipment.
4. Manufacturer's certification of prototype testing.
5. Manufacturer's published warranty documents.
6. Shop drawings showing plan and elevation views with certified overall dimensions, as well as wiring interconnection details.
7. Interconnection wiring diagrams showing all external connections required; with field wiring terminals marked in a consistent point-to-point manner.
8. Generator sizing software report(s) showing compliance with all specification requirements and any additional motor starting requirements indicated in contract documents.
9. Time-current-curves demonstrating that the generator alternator relaying or breaker protective device(s) provide proper protection for the alternator by a comparison of the trip characteristic of the breaker with the thermal damage characteristic of the alternator.
10. Manufacturer's installation instructions.

3.2. FACTORY TESTING.

A. The generator set supplier shall perform a complete operational test on the generator set prior to shipping from the factory. A certified test report shall be provided. Equipment supplied shall be fully tested at the factory for function and performance.

B. Factory testing may be witnessed by the owner and consulting engineer. Costs for travel expenses will be the responsibility of the owner and consulting engineer. Supplier is responsible to provide two weeks notice for testing.

C. Generator set factory tests on the equipment shall be performed at rated load and rated power factor. Generator sets that have not been factory tested at rated power factor will not be acceptable. Tests shall include: run at full load, maximum power, voltage regulation, transient and steady-state governing, single step load pickup, and function of safety shutdowns.

3.3. INSTALLATION

A. Equipment shall be installed by the contractor in accordance with final submittals and contract documents. Installation shall comply with applicable state and local codes as required by the authority having jurisdiction. Install equipment in accordance with manufacturer's instructions and instructions included in the listing or labeling of UL listed products.

B. Installation of equipment shall include furnishing and installing all interconnecting wiring, fuel lines, etc. between all major equipment provided for the on-site power system. The contractor shall also perform interconnecting wiring between equipment sections (when required), under the supervision of the equipment supplier.

C. Generator equipment shall be installed on elevated platform in strict compliance with structural engineer's and equipment supplier's direction. Equipment shall be permanently fastened to the platform in accordance with manufacturer's instructions and seismic requirements of the site.

D. Contractor shall be responsible for coordinating (prior to providing submittal data) and providing complete engine fuel system, including gas service from the local gas utility company, all piping, pressure regulators, strainers, control valves, etc. as required for a fully-functional, code-compliant fuel system. Entire installation shall be provided in strict conformance with all recommendations and requirements of the generator manufacturer. All costs (including aid-to-construction costs from the local gas company where the generator is to be fed directly from a dedicated natural gas service) shall be included in bid cost. The fuel system shall be plumbed to the generator set skid for ease of site connections to the generator set.

E. Remote stop station type, labeling and location shall be submitted by contractor to engineer and local fire marshal for approval prior to rough-in. Location shall be outside the generator enclosure (where so installed within a room) or elsewhere on the premises where the prime mover is located outside the building. Contractor shall provide all interconnections from remote stop station to generator set as required by generator set supplier for a fully-functional system.

F. Equipment shall be initially started and operated by representatives of the manufacturer.

G. All equipment shall be physically inspected for damage. Scratches and other installation damage shall be repaired prior to final system testing. Equipment shall be thoroughly cleaned to remove all dirt and construction debris prior to initial operation and final testing of the system.

3.4. ON-SITE ACCEPTANCE TEST:

A. The complete installation shall be tested for compliance with the specification following completion of all site work. Testing shall be conducted by representatives of the manufacturer, with required fuel supplied by Contractor. The Engineer shall be notified in advance and shall have the option to witness the tests.

B. Installation acceptance tests to be conducted on-site shall include the following (performed in accordance with NFPA 110):
   1. "Cold start" test.
   2. Four (4) hour full load test. Provide resistive load banks and make temporary connections as required.
   3. One step rated load pickup test.
   4. Power failure test on the entire installed system. This test shall be conducted by opening the power supply from the utility service, and observing proper operation of the system for at least 2 hours. Coordinate timing and obtain approval for start of test with site personnel.

3.5. TRAINING

A. The equipment supplier shall provide training for the facility operating personnel covering

operation and maintenance of the equipment provided. The training program shall be not less than 4 hours in duration and the class size shall be limited to not less than 5 persons. Training date shall be coordinated with the facility owner.

3.6. SERVICE AND SUPPORT

A. The manufacturer of the generator set shall maintain service parts inventory at a central location which is accessible to the service location 24 hours per day, 365 days per year.

B. The generator set shall be distributed and serviced by a local service organization that is trained and factory certified in generator set service. The supplier shall maintain an inventory of critical replacement parts at the local service organization, and in service vehicles. The service organization shall be on call 24 hours per day, 365 days per year.

C. The manufacturer of the generator set shall own, maintain and make available (to engineer, free of charge) generator set sizing software that calculates voltage dip, frequency dip, THDI and THDV of proposed generator/alternator set using the following inputs:
   1. Summary of step loads including load type (across-the-line motor, VFD, Fire Pump, Fluorescent Lighting, UPS, etc.).
   2. Generator Set Duty (Standby, Prime, Continuous).
   3. Maximum Ambient Temperature.
   4. Project site altitude.
   5. Generator Fuel type.
   6. Voltage/Phase/Frequency.

D. The manufacturer shall maintain model and serial number records of each generator set provided for at least 20 years.

3.7. WARRANTY

A. The generator set and associated equipment shall be warranted for a period of not less than 2 years from the date of commissioning against defects in materials and workmanship.

B. The warranty shall be comprehensive. No deductibles shall be allowed for travel time, service hours, repair parts cost, etc.

END OF SECTION 263213

SECTION 263623 - AUTOMATIC TRANSFER SWITCHES

PART 1 - GENERAL

1.1. SCOPE

A. Provide complete factory assembled power transfer equipment with field programmable digital electronic controls designed for fully automatic operation and including: surge voltage isolation, voltage sensors on all phases of both sources, power switch mechanism, permanently attached manual operation provisions, positive mechanical and electrical interlocking, and mechanically held contacts for both sources.

B. The generator set manufacturer shall warrant transfer switches to provide a single source of responsibility for all the products provided. Technicians specifically trained to support the product shall service the transfer switches.

1.2. CODES AND STANDARDS

A. The automatic transfer switch installation and application shall conform to the requirements of the following codes and standards:
1. CSA 282, Emergency Electrical Power Supply for Buildings
2. NFPA70 – National Electrical Code. Equipment shall be suitable for use in systems in compliance to Article 700, 701, and 702.
3. NFPA99 – Essential Electrical Systems for Health Care Facilities
4. NFPA110 – Emergency and Standby Power Systems. The transfer switch shall meet all requirements for Level 1 systems.
5. IEEE446 – Recommended Practice for Emergency and Standby Power Systems for Commercial and Industrial Applications.
6. NEMA ICS10-1993 – AC Automatic Transfer Switches.

B. The transfer switch assembly shall comply with the following standards:
1. CSA C22.2, No. 14 – M91 Industrial Control Equipment.
2. EN55011, Class B Radiated Emissions
3. EN55011, Class B Conducted Emissions
4. IEC 1000-4-5 (EN 61000-4-5); AC Surge Immunity.
5. IEC 1000-4-4 (EN 61000-4-4) Fast Transients Immunity
6. IEC 1000-4-2 (EN 61000-4-2) Electrostatic Discharge Immunity
7. IEC 1000-4-3 (EN 61000-4-3) Radiated Field Immunity
8. IEC 1000-4-6 Conducted Field Immunity
9. IEC 1000-4-11 Voltage Dip Immunity.
10. IEEE 62.41, AC Voltage Surge Immunity.
11. IEEE 62.45, AC Voltage Surge.
12. UL1008 – Transfer Switches. Transfer switches shall be UL1008 listed. UL1008 transfer switches may be supplied in UL891 enclosures if necessary to meet the physical requirements of the project.

C. The transfer switch manufacturer shall be certified to ISO 9001 International Quality Standard

and shall have third party certification verifying quality assurance in design/development, production, installation, and service, in accordance with ISO 9001.

1.3. ACCEPTABLE MANUFACTURERS

A. Cummins/Onan

B. Caterpillar

C. Generac

D. Kohler

E. Zenith

F. Russelectric

G. ASCO

H. Eaton

PART 2 - PRODUCTS

2.1. POWER TRANSFER SWITCH

A. Ratings
1. Refer to the project drawings for specifications on the sizes and types of transfer switch equipment, withstand and closing ratings, voltage and ampere ratings, enclosure type, and accessories.
2. Main contacts shall be rated for 600 Volts AC minimum.
3. Transfer switches shall be rated to carry 100 percent of rated current continuously in the enclosure supplied, in ambient temperatures of -40 to +60 degrees C, relative humidity up to 95% (non-condensing), and altitudes up to 10,000 feet (3000M).
4. Transfer switch equipment shall have withstand and closing ratings (WCR) in RMS symmetrical amperes equal to or greater than the required ratings shown on the drawings (at the specified voltage). When a power distribution system electrical study (including short circuit stud, etc.) is a part of the project, contractor shall further verify that all proposed equipment is properly rated (per the results of the study) prior to submitting shop drawings. The transfer switch and its upstream protection shall be coordinated. The transfer switch shall be third party listed and labeled for use with the specific protective device(s) installed in the application.

B. Construction
1. Transfer switches shall be double-throw, electrically and mechanically interlocked, and mechanically held in the source 1 and source 2 positions. The transfer switch shall be specifically designed to transfer to the best available source if it inadvertently stops in a neutral position.
2. Transfer switches shall be of the Programmed (Delayed) Transition type. Transfer switches rated through 1000 amperes shall be equipped with permanently attached

manual operating handles and quick-break, quick-make over-center contact mechanisms. Transfer switches over 1000 amperes shall be equipped with manual operators for service use only under de-energized conditions.

3. The switch shall completely disconnect the load from both sources for an adjustable period of time to allow regenerative voltage to decay to a safe level prior to connecting to the new source.
4. Main switch contacts shall be high-pressure silver alloy. Contact assemblies shall have arc chutes for positive arc extinguishing. Arc chutes shall have insulating covers to prevent inter-phase flashover.
5. All wiring shall be UL listed 105 degree C, 600 volt rated, and sized as required. Each wire, device or function shall be identified with a source and destination by silk-screen or similar permanent identification. Circuit boards shall be connected wiring harnesses by means of locking disconnect plug(s), to allow the control system to be easily disconnected and serviced without disconnecting power from the transfer switch mechanism.
6. Bus structures shall be constructed from silver plated copper or tin plated aluminum with bolted joints for all three phases, with a full neutral, and a 1/4 x 2 inch ground bus extending through all sections.
7. The framework and all other sheet metal components of the system shall be primed with a rust-inhibiting primer, and finished with two coats of satin finish ANSI 61 gray enamel, or manufacturer's standard color.
8. All door mounted control components shall be industrial type oil-tight devices with contact ratings a minimum of twice the maximum circuit ampacity they are controlling. Toggle switches and other light duty and durability control devices are not acceptable. Indicator lamps shall be high intensity LED type devices. Indicator lamp condition (on or off) shall be easily visible in bright room lighting conditions.
9. Power transfer switch shall be provided with flame retardant transparent covers to allow viewing of switch contact operation or shall be indicated by mechanical flags. Barriers shall be provided to prevent inadvertent contact with any voltage of greater than 50VDC.
10. Transfer switches shall be 3-pole with a solid neutral bus and lugs. The neutral bus shall be sized to carry 100% of the current designated on the switch rating.

C. Connections

1. Field control connections shall be made on a common terminal block that is clearly and permanently labeled.
2. Transfer switch shall be provided with AL/CU compression lugs suitable for the quantities and sizes of power conductors required.

2.2. TRANSFER SWITCH CONTROL

A. Operator Panel. Each transfer switch shall be provided with a control panel to allow the operator to view the status and control operation of the transfer switch. The operator panel shall be permanently labeled for switch and control functions. The operator panel shall be provided with the following features and capabilities.

1. High intensity LED lamps to indicate the source that the load is connected to (source 1 or source 2); and which source(s) are available. Source available LED indicators shall operate from the control microprocessor to indicate the true condition of the sources as sensed by the control.

2. High intensity LED lamps to indicate that the transfer switch is “not in auto” (due to control being disabled or due to bypass switch (when used) enabled or in operation) and “Test/Exercise Active” to indicate that the control system is testing or exercising the generator set.
3. “OVERRIDE” pushbutton to cause the transfer switch to bypass any active time delays for start, transfer, and retransfer and immediately proceed with its next logical operation.
4. “TEST” pushbutton to initiate a preprogrammed test sequence for the generator set and transfer switch. The transfer switch shall be programmable for test with load or test without load.
5. “RESET/LAMP TEST” pushbutton that will clear any faults present in the control, or simultaneously test all lamps on the panel by lighting them.
6. The control system shall continuously log information on the number of hours each source has been connected to the load, the number of times transferred, and the total number of times each source has failed. This information shall be available via an operator display panel.
7. Vacuum fluorescent alphanumeric display panel with push-button navigation switches. The display shall be clearly visible in both bright (sunlight) and no light conditions. It shall be visible over an angle of at least 120 degrees. The Alphanumeric display panel shall be capable of providing the following functions and capabilities:
   a. Display source condition information, including AC voltage for each phase of normal and emergency source, frequency of each source. Voltage for all three phases shall be displayed on a single screen for easy viewing of voltage balance. Line to neutral voltages shall be displayed for 4-wire systems.
   b. Display source status, to indicate source is connected or not connected.
   c. The display panel shall allow the operator to view and make the following adjustments in the control system, after entering an access code:
      1) Set nominal voltage and frequency for the transfer switch.
      2) Adjust voltage and frequency sensor operation set points.
      3) Set up time clock functions.
      4) Set up load sequence functions.
      5) Enable or disable control functions in the transfer switch, including program transition.
      6) Set up exercise and load test operation conditions, as well as normal system time delays for transfer time, time delay start, stop, transfer, and retransfer.
   d. Display Real time Clock data, including date, and time in hours, minutes, and seconds. The real time clock shall be incorporate provisions for automatic daylight savings time and leap year adjustments. The control shall also log total operating hours for the control system.
   e. Display service history for the transfer switch. Display source connected hours, to indicate the total number of hours connected to each source. Display number of times transferred, and total number of times each source has failed.
   f. Display fault history on the transfer switch, including condition, and date and time of fault. Faults to include controller checksum error, low controller DC voltage, ATS fail to close on transfer, ATS fail to close on retransfer, battery charger malfunction, network battery voltage low, network communications error.

B. Internal Controls

1. The transfer switch control system shall be configurable in the field for any operating voltage level up to 600VAC. Provide RMS voltage sensing and metering that is accurate to within plus or minus 1% of nominal voltage level. Frequency sensing shall be accurate to within plus or minus 0.2%. Voltage sensing shall be monitored based on the normal voltage at the site. Systems that utilize voltage monitoring based on standard voltage conditions that are not field configurable are not acceptable.
2. Transfer switch voltage sensors shall be close differential type, providing source availability information to the control system based on the following functions:
   a. Monitoring all phases of the normal service (source 1) for under voltage conditions (adjustable for pickup in a range of 85 to 98% of the normal voltage level and dropout in a range of 75 to 98% of normal voltage level).
   b. Monitoring all phases of the emergency service (source 2) for under voltage conditions (adjustable for pickup in a range of 85 to 98% of the normal voltage level and dropout in a range of 75 to 98% of pickup voltage level).
   c. Monitoring all phases of the normal service (source 1) and emergency service (source 2) for voltage imbalance.
   d. Monitoring all phases of the normal service (source 1) and emergency service (source 2) for loss of a single phase.
   e. Monitoring all phases of the normal service (source 1) and emergency service (source 2) for phase rotation.
   f. Monitoring all phases of the normal service (source 1) and emergency service (source 2) for over voltage conditions (adjustable for dropout over a range of 105 to 135% of normal voltage, and pickup at 95-99% of dropout voltage level).
   g. Monitoring all phases of the normal service (source 1) and emergency service (source 2) for over or under frequency conditions.
3. The transfer control shall incorporate a series of diagnostic LED lamps.
4. The transfer switch shall be configurable to control the operation time from source to source (program transition operation). The control system shall be capable of enabling or disabling this feature, and adjusting the time period to a specific value. A phase band monitor or similar device is not an acceptable alternate for this feature. The program/delayed transition time setting (time in which load is not connected to either source during transfer) shall be initially set at 10 seconds to allow motors to properly decay per MG-1 standard
5. The transfer switch shall incorporate adjustable time delays for generator set start (adjustable in a range from 0-15 seconds); transfer (adjustable in a range from 0-120 seconds); retransfer (adjustable in a range from 0-30 minutes); and generator stop (cooldown) (adjustable in a range of 0-30 minutes).
6. The transfer switch shall be configurable to accept a relay contact signal from an external device to prevent transfer to the generator service.
7. The control system shall be designed and prototype tested for operation in ambient temperatures from -40C to +70C. It shall be designed and tested to comply with the requirements of the noted voltage surge and RFI/EMI standards.
8. The control shall have optically isolated logic inputs, high isolation transformers for AC inputs, and relays on all outputs, to provide optimum protection from line voltage surges, RFI and EMI.

C. Control Interface

1. The transfer switch will provide an isolated relay contact for starting of a generator set. The relay shall be normally held open, and close to start the generator set. Output contacts shall be form C, for compatibility with any generator set.
2. Provide one set Form C auxiliary contacts on both sides, operated by transfer switch position, rated 10 amps 250 VAC.
3. The transfer switch shall provide additional relay contacts to indicate the following conditions: Utility Source Available, Load Connected to Utility, Generator Source Available, Load Connected to Generator, Pre-Transfer Warning (adjustable 0-59 second time delay).

2.3. ENCLOSURE

A. Enclosures shall be UL listed. The enclosure shall provide wire bend space in compliance to the latest version of NFPA70. The cabinet door shall include permanently mounted key type latches.

B. If not specifically indicated otherwise on plans, transfer switch equipment enclosures shall meet the following minimum requirements:
1. For dry interior locations: NEMA 1 or better (unless shown otherwise on plans).
2. For wet interior (pump stations, etc.) or exterior locations: NEMA 4X stainless steel or better (unless shown otherwise on plans).

C. The cabinet shall provide code-required wire bend space at point of entry as shown on the drawings. Manual operating handles and all control switches (other than key-operated switches) shall be accessible to authorized personnel only by opening the key-locking cabinet door. Transfer switches with manual operating handles and/or non key-operated control switches located on outside of cabinet do not meet this specification and are not acceptable.

D. Note size and access requirements for the transfer switch (and associated equipment) and provide equipment that will fit into the space allowed and comply with code-specified access requirements.

2.4. BATTERY CHARGING

A. The transfer switch/generator set combination shall be provided with a battery charger for the generator set starting batteries. Refer to Generator Sets Specification Section 263213 for specific requirements. Supply power failed indication shall be displayed on the ATS control panel.

2.5. SEQUENCE OF OPERATION

A. Programmed (Delayed) Transition Sequence of Operation
1. Normal State:
   a. Transfer switch normally connects an energized utility power source (source 1) to loads and a generator set (source 2) to the loads when normal source fails. The normal position of the transfer switch is connected to source 1 (connected to the utility), and no start signal is supplied to the genset.
2. Normal Power Failure and Restoration:

a. When the transfer switch senses a power failure on source 1, it shall complete a pre-programmed time delay start sequence, and then send a start signal to the generator set.
b. The generator set shall immediately start and accelerate to rated voltage and frequency.
c. The transfer system shall complete a programmable time delay sequence, and then transfer to source 2 by delayed (programmed) transition. The transfer switch shall accomplish this by opening the normal source contacts, and closing the alternate source contacts a predetermined time period later (to allow motor loads to decay per NEMA MG-1 standard).
d. On return of source 1 to acceptable voltage and frequency levels, the control system shall initiate a time delay retransfer sequence. On completion of the time delay sequence, the transfer switch shall operate to connect the loads to the normal source by opening the alternate source contacts, and closing the normal source contacts a predetermined time period later (to allow motor loads to decay per NEMA MG-1 standard). The timing sequence for the contact operation shall be programmable in the controller. The control system shall transfer loads back to source 1 in the reverse sequence to that which was used to connect loads to source 2.
e. If the generator set fails during this period and normal source is available, the transfer switch shall automatically reconnect the system loads to the normal service.
f. The transfer switch shall operate the generator set unloaded for a cooldown period, and then remove the start signal from the generator set.

3. Generator Set Exercise (Test) With Load Mode (Delayed (programmed)Transition). The control system shall be configurable to test the generator set under load. In this mode, the transfer switch shall control the generator set in the following sequence:
   a. Transfer switch shall initiate the exercise sequence at a time indicated in the exercise timer program, or when manually initiated by the operator.
   b. The transfer switch shall issue a compatible start command to the generator set as follows:
      1) On generators rated 50kW and greater, the transfer switch shall cause the generator set to start and run at idle until it has reached normal operating temperature. When the generator set has reached normal operating temperature or after an adjustable time period (whichever is shorter), the control system shall accelerate the generator set to rated voltage and frequency.
      2) On generators rated less than 50kW, the generator set shall immediately start and accelerate to rated voltage and frequency.
   c. When the control systems senses the generator set at rated voltage and frequency, it shall operate to connect the loads to the generator set by opening the normal source contacts, and closing the alternate source contacts a predetermined time period later (to allow motor loads to decay per NEMA MG-1 standard). The timing sequence for the contact operation shall be programmable in the controller.
   d. The generator set shall operate connected to the load for the duration of the exercise period.

e. On completion of the exercise period, the transfer switch shall operate to connect the loads to the normal source by opening the alternate source contacts, and closing the normal source contacts a predetermined time period later (to allow motor loads to decay per NEMA MG-1 standard). The timing sequence for the contact operation shall be programmable in the controller.

f. The transfer switch shall operate the generator set unloaded for a cooldown period, and then remove the start signal from the generator set.

g. If the normal power fails at any time when the generator set is running, the transfer switch shall immediately connect the system loads to the generator set.

h. If the generator set fails during the exercise period and normal source is available, the transfer switch shall automatically reconnect the system loads to the normal service.

4. Generator Set Exercise (Test) Without Load Mode. The control system shall be configurable to test the generator set without transfer switch load connected. In this mode, the transfer switch shall control the generator set in the following sequence:

a. Transfer switch shall initiate the exercise sequence at a time indicated in the exercise timer program, or when manually initiated by the operator.

b. The transfer switch shall issue a compatible start command to the generator set as follows:

1) On generators rated 50kW and greater, the transfer switch shall cause the generator set to start and run at idle until it has reached normal operating temperature. When the generator set has reached normal operating temperature or after an adjustable time period (whichever is shorter), the control system shall accelerate the generator set to rated voltage and frequency.

2) On generators rated less than 50kW, the generator set shall immediately start and accelerate to rated voltage and frequency.

c. When the control systems senses the generator set at rated voltage and frequency, it shall operate the generator set unloaded for the duration of the exercise period.

d. At the completion of the exercise period, the transfer switch shall remove the start signal from the generator set. If the normal power fails at any time when the generator set is running, the transfer switch shall immediately connect the system loads to the generator set.

PART 3 - EXECUTION

3.1. POWER COMPANY APPROVAL

A. The transfer switch shall be designed to meet all applicable power company requirements for connection to the power company's system, and if applicable, shall be on the power company's approved list of automatic transfer switches. Contractor shall ensure that transfer switch is specifically approved by power company for connection to their system prior to purchasing the transfer switch.

3.2. FACTORY TESTING

A. The transfer switch manufacturer shall perform a complete operational test on the transfer

switch prior to shipping from the factory. A certified test report shall be submitted. Test process shall include calibration of voltage sensors.

3.3. SERVICE AND SUPPORT

A. The manufacturer of the transfer switch shall maintain service parts inventory at a central location which is accessible to the service location 24 hours per day, 365 days per year.

B. The transfer switch shall be serviced by a local service organization that is trained and factory certified in both generator set and transfer switch service. The supplier shall maintain an inventory of critical replacement parts at the local service organization, and in service vehicles. The service organization shall be on call 24 hours per day, 365 days per year.

C. The manufacturer shall maintain model and serial number records of each transfer switch provided for at least 20 years.

D. After generator set installation, the generator set supplier shall conduct a complete operation, basic maintenance, and emergency service seminar for up to 5 persons employed by the facility owner. The seminar shall include instruction on operation of the transfer equipment, normal testing and exercise, adjustments to the control system, use of the PC based service and maintenance tools provided under this contract, and emergency operation procedures. The class duration shall be at least 4 hours in length, and include practical operation with the installed equipment.

3.4. WARRANTY

A. The automatic transfer equipment shall be warranted (by the generator supplier when a generator is supplied within the project) for a period of not less than 2 years from the date of commissioning against defects in materials and workmanship.

B. The warranty shall be comprehensive. No deductibles shall be allowed for travel time, service hours, repair parts cost, etc.

END OF SECTION 263623

SECTION 264300 - SURGE PROTECTIVE DEVICES

PART 1 - GENERAL

1.1. RELATED DOCUMENTS

A. Drawings and general provisions of the Contract, including General and Supplementary Conditions and Division 01 Specification Sections, apply to this Section.

1.2. SUMMARY

A. Section includes field-mounted SPDs for low-voltage (<1000 V) power distribution and control equipment.

B. The specified unit(s) shall provide effective high energy transient voltage surge suppression, surge current diversion and high frequency noise attenuation in all electrical modes for equipment connected downstream from the facility's meter or load side of the main overcurrent device. The unit(s) shall be connected in parallel with the facility's wiring system.

C. The unit(s) shall be designed and manufactured in North America by a qualified manufacturer of suppression filter system equipment. The qualified manufacturer shall have been engaged in the commercial design and manufacturer of such products for minimum of ten (10) years.

D. All products that are submitted according to these specification will be required to meet this specification in it's entirety for both service and distribution TVSS systems. Any product that is submitted and does not comply with all parts of this specification will be subject to rejection.

1.3. DEFINITIONS

A. VPR: Voltage Protection Rating.

B. SPD: Surge Protective Device(s)

C. $I_{(n)}$: Nominal Discharge Current

1.4. SUBMITTALS

A. See specification section 260500.

B. Product Data: For each type of product indicated. Include:
1. Maximum Single Impulse Surge Current Rating.
2. Surge Life (Repetitive Surge) Rating.
3. UL1449 (Latest Edition) Voltage Protection Ratings (VPR).
4. UL1449 (Latest Edition) Nominal Discharge Current (In).
5. Product dimensions and weights.
6. Furnished specialties and accessories.

C. Qualification Data:

D. Safety Agency File Number.

E. ISO 9001-2008 Certification.

F. ISO 1401-2001 Certification.

G. Operation and Maintenance Data: For SPDs to include all submittal data and any applicable operation and maintenance manuals.

H. Warranties: Sample of special warranties.

1.5. QUALITY ASSURANCE

A. Electrical Components, Devices, and Accessories: Listed and labeled as defined in NFPA 70, by a testing agency, and marked for intended location and application.

B. The unit shall be UL 1449 Listed and CUL Approved as a Surge Protective Device and UL 1283 Listed as an Electromagnetic Interference Filter

C. Provide 2nd party certified data demonstrating SPD response to ANSI/IEEE C62.41.2-2002 standard waveforms when tested according to IEEE C62.45.

D. Comply with NFPA 70.

E. All SPDs provided within this project at the service entrance, distribution panels, and sub-panels shall be from the same manufacturer.

1.6. PROJECT CONDITIONS

A. Service Conditions: Rate SPDs for continuous operation under the following conditions unless otherwise indicated:
1. Maximum Continuous Operating Voltage: Not less than 115 percent of nominal system operating voltage.
2. Operating Temperature: 30 to 150 deg F.
3. Humidity: 0 to 95 percent, non-condensing.
4. Altitude: Less than 13,000 feet above sea level.

1.7. COORDINATION

A. Where field-mounted SPD's are specifically shown on plans, coordinate locations of field-mounted SPDs to allow adequate clearances for maintenance.

1.8. WARRANTY

A. Special Warranty: Manufacturer's standard form in which manufacturer agrees to repair or replace components of surge suppressors that fail in materials or workmanship within specified warranty period.

1. Warranty Period: 10 years from date of Substantial Completion.

1.9. EXTRA MATERIALS

A. Furnish extra materials that match products installed and that are packaged with protective covering for storage and identified with labels describing contents.
   1. Replaceable Protection Modules: 1 of each size and type installed, where field-replaceable modular SPDs are provided.
   2. Fuses: 1 of each size and type installed, where field-replaceable fuses are provided.

PART 2 - PRODUCTS

2.1. SURGE PROTECTIVE DEVICES

A. Manufacturer:
   1. Surge Protective Devices shall be as manufactured by the distribution equipment manufacturer (Square D, etc.) or Surge Suppression Inc.

B. Each Surge Protective Device shall:
   1. Be UL 1449 (Latest Edition) listed.
   2. Have short-circuit current rating complying with UL 1449 (Latest Edition), that matches or exceeds the short-circuit rating of the associated distribution equipment.
   3. Be designed to withstand a maximum continuous operating voltage (MCOV) of not less than 115% of nominal RMS voltage.
   4. Have fuses, rated at 200-kA interrupting capacity.
   5. Have a minimum UL 1449 Nominal Discharge Current (I_n) Rating of 20kA.
   6. Be fabricated using bolted compression lugs.
   7. Provide suppression for all ten (10) modes of protection.
   8. Have LED indicator lights for power and protection status of each phase.
   9. Have audible alarm, with silencing switch, to indicate when protection has failed.
   10. Have form-C contacts rated at 2 A and 24-V ac minimum, one normally open and one normally closed, for remote monitoring of protection status. Contacts shall reverse on failure of any surge diversion module or on opening of any current-limiting device. Coordinate with facility monitoring and control system if monitoring by that system is required by plans or other specifications.
   11. Have six-digit transient-event counter, mounted to front of equipment door, set to totalize transient surges (externally mounted SPD's may have the transient –event counter monted on the visible face of the SPD).
   12. Meet all UL 96A requirements (for Lightning Protection Systems) where the device is installed at a service entrance of the facility. At a minimum, these devices shall:
      a. Be marked as Type 1 or Type 2 SPDs with product Identity consisting of "Surge Protective Device" or "SPD", and identifying all ratings so required by UL96A and the 4 digit alpha numeric Control Number.
      b. Have a minimum UL 1449 Nominal Discharge Current (I_n) Rating of 20kA.
      c. Be UL listed and labeled with holographic label.

C. Peak Single-Impulse Surge Current Rating shall be meet the following minimums unless specifically shown otherwise on plans:

Application	Per Phase	Per Mode
Service Entrance Devices	240 kA	120 kA
Downstream Devices	160 kA	80 kA

D. The ANSI/UL 1449 voltage protection rating (VPR) in grounded wye circuits, the SPDs shall not exceed the following:

Modes	208Y/120V	480Y/277V	600Y/347V
L-N,L-G, N-G	800	1200	1500
L-L	1200	2000	2500

E. The ANSI /UL 1449 VPR for 240/120 V, 3-wire or 4-wire circuits with high leg shall not exceed the following:

Modes	240/120V
L-N,L-G, N-G	1200/800

2.2. ENCLOSURES

A. Where external units are specifically specified on plans, units not mounted within electrical distribution equipment (such as switchboards, MCC's, etc.) shall be provided in enclosures with NEMA enclosure ratings that match or exceed the NEMA enclosure ratings of the equipment from which the units are fed. For example, a unit fed from a NEMA 4X stainless steel panelboard shall also be mounted within a NEMA 4X stainless steel enclosure.

PART 3 - EXECUTION

3.1. INSTALLATION

A. All SPD's shall be integrally-mounted within the associated distribution equipment unless specifically shown otherwise on plans.

B. Install SPDs at service entrance on load side, with ground lead bonded to service entrance ground.

C. Install SPDs downstream of the service entrance with conductors or buses between suppressor and points of attachment as short and straight as possible. The lead lengths between the TVSS unit and the equipment being protected shall not exceed fourteen (14) inches without approval from the engineer. Do not bond neutral and ground. Leads shall be as straight as possible with no sharp bends.

D. Where externally-mounted SPD's are specifically shown on plans, provide circuit breaker as directed by the SPD supplier as a dedicated disconnecting means for SPD unless otherwise indicated.

3.2. FIELD QUALITY CONTROL

A. Ensure that interiors are free of foreign materials and dirt.

B. Check and test switches, pushbuttons, meters for proper operation.

C. Check and test indicating lights for proper operation and color.

D. Perform manufacturer's on site field test procedures.

3.3. STARTUP SERVICE

A. Do not perform insulation resistance (MEGGER) tests of the distribution wiring equipment with the SPDs installed. Disconnect all wires, including neutral, before conducting insulation resistance tests, and reconnect immediately after the testing is over.

3.4. SYSTEM WARRANTY

A. The SPD system manufacturer shall warranty the entire SPD system against defective materials and workmanship for a period of ten (10) years from the date of substantial completion. This warranty is in effect as long as the unit is installed in compliance with the manufacturer's installation, operation, and maintenance manual, UL Listing requirements, and any applicable national or local electrical codes.

B. Any SPD device which shows evidence of failure or incorrect operation, including damage as the result of lightning strikes, during the warranty period shall be replaced by the manufacturer at no charge to the owner. Warranty will provide for multiple exchanges of any inoperable devices at any time during the warranty period which starts at the date of substantial completion of the system to which the surge suppressor is installed.

C. The manufacturer is required to have a nationwide network of factory-authorized local service representatives for repair and service of this product. The manufacturer shall have a dedicated 1-800 telephone number for service problems and questions. This number shall be manned by a knowledgeable factory employee to ensure prompt response to any emergency situation that may arise.

END OF SECTION 264300

SECTION 265000 - LIGHTING MATERIALS AND METHODS

PART 1 - GENERAL

1.1. DESCRIPTION

A. Lighting

B. Ballasts/Drivers

C. Lamps

1.2. SUBMITTALS

A. Complete submittals shall be provided identifying all lighting fixture types and options, all lamp types (where applicable) and compliance with all contract requirements. The absence of clear submittal information specifically listing exceptions/deviations from detailed contract requirements will be understood to indicated that the contractor/supplier intends to meet all contract requirements. Refer to specification section 260500 for additional requirements.

B.

PART 2 - PRODUCTS

2.1. GENERAL

A. Lighting fixtures shall be furnished as shown on plans and specified herein. It shall specifically be the responsibility of Contractor to verify exact types ceilings, walls, etc. and recessing depth of all recessed fixtures and furnish the specific mounting trims and accessories of the specified and/or accepted fixture specifically for the ceiling, wall etc. in which each fixture is to be installed.

B. Base bid manufacturers are listed on the lighting fixture schedule. Manufacturers listed without accompanying catalog numbers are responsible for meeting the quality standards, efficiency, maximum wattages and photometric distributions set by the specified product.

C. All lighting fixtures shall be so designed and shall have ballasts, drivers and other similar items so installed as to function without interruptions or failures when operating in the environment in which they are proposed to be installed. Special attention shall be given to environments with potentially high ambient temperatures such as attic spaces, exterior soffits, confined interior soffits, coves, unconditioned spaces, etc. and shall be addressed by providing fixtures with suitable high ambient temperature ratings, remote mounting of drivers/ballasts, providing approved ventilation, etc. as directed by fixture manufacturer and approved by engineer, at contractor’s expense.

2.2. LED LUMINAIRES

A. For the purpose of these specifications, LED Luminaires shall be defined as the entire LED fixture assembly including LED array, drivers, housing, electronics, etc. that compose the lighting fixture.

B. Furnish and install LED Luminaire of proper size, type, efficacy, delivered lumen output, color temperature, distribution pattern, operational life, and CRI as shown on drawings.

C. LED Luminaires shall be tested in accordance with LM-79 and LM-80 standards.

D. LED drivers shall comply with NEMA 410 standards for inrush current, etc.

E. Exterior, pole mounted LED Luminaires shall be provided with an easily-serviceable, UL recognized surge protection device that meets a minimum 10kA Category C Low operation (IECC C62.41.2-2002). Device shall be wired in front of light engine(s) and driver(s) and shall fail "open" such as to prevent fixture operation after a surge protection failure.

F. LED Luminaires shall have a guarantee-warranty of at least five years unless specifically noted otherwise on contract documents.

G. LED Luminaire assembly shall comply with ambient temperature requirements specified in General section above.

2.3. MANUFACTURER

A. Fixtures and stems shall be manufactured as shown in fixture schedule or approved equals.

B. Ballasts/drivers shall be as manufactured by Philips/Advance, GE, Lutron, Magnatec, Motorola, EldoLED or approved equal.

PART 3 - EXECUTION

3.1. INSTALLATION OF LIGHTING FIXTURES

A. Support:
   1. Support of all lighting fixtures shall be responsibility of electrical contractor. All lighting fixture supports shall be installed in accordance with lighting fixture supplier's recommendations.

B. Coordination:
   1. Contractor shall coordinate all dimensions & locations of light fixtures prior to rough-in to insure proper fit and coordination with other trades.
   2. Contractor shall verify exact ceiling types being installed and shall adjust fixture trim types accordingly (prior to submitting light fixture shop drawings).

END OF SECTION 265000

SECTION 270500 - AUXILIARY SYSTEM CABLES, 0-50V

PART 1 - GENERAL

1.1. DESCRIPTION

A. Cables rated for 0V-50V application

PART 2 - PRODUCTS

2.1. GENERAL

A. Unless specified otherwise, all cables within the scope of this specification section shall:
1. Be rated for exposed cable tray installation.
2. Be plenum rated (Class 1 Control cabling and Instrumentation cabling installed in conduit or exposed in cable tray in non-plenum areas is not required to be plenum-rated).
3. Be UL-rated for the proposed application.
4. Be multi-conductor with overall outer sheath as required by the application. The insulation of each conductor within the overall multi-conductor cable shall be uniquely color-coded. Ground conductors (when provided) within the multi-conductor cable shall have green insulation. Conductors with green insulation shall not be used for conductors other than ground.
5. Utilize copper conductors.
6. Have wire gauge as required to limit voltage drop to acceptable limits determined by the system supplier and to meet all applicable code requirements.
7. Where installed underground, within slab-on-grade or in exterior locations, be rated for wet locations.
8. Where required for specific systems, meet the specific requirements (conductor quantity, wire gauge, insulation type, shielding, etc.) of the system supplier.

2.2. INSTRUMENTATION CABLING

A. In addition to above requirements, and unless specified otherwise, Instrumentation cabling shall:
1. Be #16awg minimum.
2. Be rated for 300V.
3. Have aluminum foil shielding.
4. Have stranded, twisted conductors.
5. Have PVC insulation/jacket with ripcord.
6. Be manufactured by Belden, AlphaWire or General Cable.

2.3. CLASS 1 CONTROL CABLING (120VAC CONTROL CIRCUITS, ETC.)

A. In addition to above requirements, and unless specified otherwise, Class 1 control cabling shall:
1. Be rated for 600V.
2. Be industrial grade.

3. Have stranded conductors.
4. Have sunlight/oil-resistant PVC/Nylon insulation and jacket with ripcord.
5. Be manufactured by Belden, AlphaWire or General Cable.

2.4. CLASS 2 & 3 CONTROL CABLING (FED FROM CLASS 2 OR 3 POWER SUPPLIES)

A. In addition to above requirements, and unless specified otherwise, Class 2 & 3 control cabling shall:
1. Be rated for 300V.
2. Be shielded if so recommended by the system supplier/integrator.
3. Have twisted conductors.
4. Have plenum-rated insulation/jacket with ripcord.
5. Be manufactured by AlphaWire, Belden, General Cable, Superior Essex or West Penn.

2.5. NETWORK CABLING

A. Furnish and install all Ethernet, Fiber Optic and Backbone Copper Telephone cabling in accordance with all BICSI requirements and in accordance with other applicable specification sections.

PART 3 - EXECUTION

3.1. GENERAL INSTALLATION

A. Routing:
1. All wires and cables shall be installed in conduit unless specifically noted otherwise. Where conduit is not otherwise required by contract documents, 0-50V Cabling located within concealed, accessible ceiling spaces (such as above lay-in ceilings) may be run without conduit if the following requirements are met:
a. Cabling is plenum-rated, multi-conductor.
b. Cabling is supported by cable tray or with J-hook supports on intervals not to exceed 5’-0” on center. Cabling shall be supported solely from the cable tray or j-hooks supported from the building structure, without using piping, ductwork, conduit or other items as supports.
c. Cabling is neatly formed, bundled and tied with plenum-rated Velcro straps on intervals not to exceed 30” on center.
d. Properly-sized conduit(s) are provided wherever cabling enters an inaccessible or exposed area (such as above gyp board ceilings, within walls or through walls).
e. Cabling is not a part of a Fire Alarm System, Smoke Control System, Emergency Generator Control System or other life-safety related system.
2. End bushings shall be provided on both ends of all raceway terminations.
3. No splices shall be pulled into conduit.
4. No cabling shall be pulled until conduit is cleaned of all foreign matter.

B. Penetrations:
1. All fire/smoke barrier penetrations shall be made in accordance with a U.L. listed assembly.
2. For cabling not installed in conduit:

a. Fire/smoke barrier penetrations shall be sealed utilizing an enclosed fire-rated pathway device (STI EZ Path or equal) containing a built-in fire sealing system sufficient to maintain the hourly fire rating of the barrier being penetrated. The self-contained sealing system shall automatically adjust to the installed cable loading and shall permit cables to be installed, removed or retrofitted without the need to remove or reinstall firestop materials. The pathway shall be UL Classified and tested to the requirements of applicable ASTM/UL1479 standards.

3. For cabling installed within conduit from endpoint to endpoint:
   a. Fire/smoke barrier penetrations shall sealed utilizing fire caulk or other equivalent firestop systems around perimeters of conduits per UL requirements.
4. For cabling installed within cable trays:
   a. Fire/smoke barrier penetrations shall be sealed with one of the following methods:
      1) Continuous cable tray through the penetration, with a combination of large firestop pillows and small firestop pillows contained, supported and secured (to prevent unauthorized removal) on both sides by aluminum wire mesh and firestop putty. Firestop pillows shall be STI Series SSB or equal and Firestop putty shall be STI Spec Seal or equal.
      2) Cable tray broken at the penetration, with fire/smoke barrier penetrations sealed utilizing an enclosed fire-rated pathway device (STI EZ Path or equal) containing a built-in fire sealing system sufficient to maintain the hourly fire rating of the barrier being penetrated. The self-contained sealing system shall automatically adjust to the installed cable loading and shall permit cables to be installed, removed or retrofitted without the need to remove or reinstall firestop materials. The pathway shall be UL Classified and tested to the requirements of applicable ASTM/UL1479 standards.

C. Excess Cabling:
   1. Excess cabling shall be neatly coiled within all junction boxes, pullboxes, wireways, etc. and at all terminations as required to allow future re-termination of cabling.

D. Terminations:
   1. Cabling shall be neatly formed, bundled and tied at all terminations.

3.2. SPLICES/CONNECTIONS/TERMINATIONS:

A. Network Cabling:
   1. Network and fiber optic cabling shall be continuous from endpoint to endpoint and shall not be spliced unless specifically noted otherwise.

B. Control Cabling:
   1. Connections shall be made with T & B Sta-Kon wire joints EPT66M, complete with insulating caps. To be installed with WT161 Tool or C nest of WT11M Tool, Ideal Super - Nuts (not wire nuts), Ideal Wing Nuts, or Buchanan Elec. Products B Cap or Series 2000 Pressure connectors complete with nylon snap on insulators to be installed with C24 pressure tool.

C. Shielded cabling:
   1. Unless directed otherwise by the system supplier, 0-50V cable shielding shall be grounded at the PLC/control panel end only (not at the field device end) with a termination kit as directed by the PLC/control panel supplier.
   2. Shielded cabling shall be continuous from endpoint to endpoint and shall not be spliced without prior written approval from the Engineer.

3.3. LABELING

A. Refer to Specification Section 260553 for all labeling requirements.

END OF SECTION 270500

SECTION 311000 - SITE CLEARING

PART 1 - GENERAL

1.1 SUMMARY

A. Section Includes:

1. Removing surface debris.
2. Removing designated paving, curbs, and etc..
3. Removing designated trees, shrubs, and other plant life.
4. Removing abandoned utilities.
5. Excavating topsoil.

1.2 UNIT PRICE - MEASUREMENT AND PAYMENT

A. Site Clearing:

1. Site Clearing is not a pay item. It shall be considered an integral part of the construction, and unit prices bid for items with which Site Clearing is connected shall be full compensation for this item and for all labor, materials, and equipment required to complete the item in accordance with the drawing and specifications.
2. Includes clearing Site, loading and removing waste materials from Site, applying herbicide to designated plant life.

1.3 SUBMITTALS

A. Product Data: Herbicide; indicate compliance with applicable codes for environmental protection.

1.4 SUSTAINABLE DESIGN SUBMITTALS

A. Manufacturer's Certificate: Products meet or exceed specified sustainable design requirements.

1. Materials Resources Certificates:

a. Source for regional materials and distance from Project Site.

B. Product Cost Data: Verify compliance with Project sustainable design requirements. Exclude cost of labor and equipment to install products. Provide cost data for following products:

1. Regional products.

1.5 QUALITY ASSURANCE

A. Conform to applicable local, state, and federal codes for environmental requirements, disposal of debris, burning debris on Site, and use of herbicide.

B. Perform Work according to all local, state, and federal standards.

PART 2 - PRODUCTS

2.1 SUSTAINABILITY CHARACTERISTICS

A. Materials and Resources Characteristics:

1. Regional Materials: Extracted, processed, and manufactured within 100 miles of Project Site.

2.2 MATERIALS

A. Herbicide: Approved by authority having jurisdiction.

PART 3 - EXECUTION

3.1 EXAMINATION

A. Verify existing plant life designated to remain is tagged or identified.

B. Identify salvage area for placing removed materials.

3.2 PREPARATION

A. Call local utility line information service at not less than three (3) working days before performing Work.

1. Request underground utilities to be located and marked within and surrounding construction areas.

3.3 PROTECTION

A. Locate, identify, and protect utilities indicated to remain from damage.

B. Protect benchmarks, survey control points, and existing structures from damage or displacement.

3.4 CLEARING

A. Clear areas required for access to Site and execution of Work to minimum depth as required by drawings and specifications.

B. Remove trees and shrubs as indicated. Remove stumps, main root ball, root system to a completely, surface rock, and all necessary debris.

C. Clear undergrowth and deadwood, without disturbing subsoil.

D. Apply herbicide to remaining stumps to inhibit growth.

3.5 REMOVAL

A. Remove debris, rock, and extracted plant life from Site.

B. Partially remove paving, curbs, etc. as indicated. Neatly saw cut edges at right angle to surface.

C. Remove abandoned utilities. Indicated removal termination point for underground utilities on record documents.

D. Continuously clean-up and remove waste materials from Site. Do not allow materials to accumulate on Site.

E. Do not burn or bury materials on Site. Leave Site in clean condition.

3.6 TOPSOIL EXCAVATION

A. Excavate topsoil from areas to be further excavated, relandscaped, or regraded, marked areas without mixing with foreign materials for use in finish grading.

B. Do not excavate wet topsoil.

C. Stockpile in area designated on Site to depth not exceeding 8 feet and protect from erosion. Stockpile material and cover over with same material until disposal.

D. Remove excess topsoil not intended for reuse from Site.

END OF SECTION 311000

This page intentionally left blank.

SECTION 312316 - EXCAVATION

PART 1 - GENERAL

1.1 SUMMARY

A. Section Includes:

1. Soil densification.
2. Excavating for building foundations.
3. Excavating for paving, roads, and parking areas.
4. Excavating for slabs-on-grade.
5. Excavating for Site structures.
6. Excavating for landscaping.

1.2 UNIT PRICE - MEASUREMENT AND PAYMENT

A. Excavating Soil Materials:

1. Excavation is not a pay item. It shall be considered an integral part of the construction, and unit prices bid for items with which Excavation is connected shall be full compensation for this item and for all labor, materials, and equipment required to complete the item in accordance with the drawing and specifications.
2. Includes general excavating to required elevations, loading and placing materials in stockpile, removing from Site. Over-Excavating: Payment will not be made for over-excavated Work for replacement materials.

1.3 SUBMITTALS

A. Excavation Protection Plan: Describe sheeting, shoring, and bracing materials and installation required to protect excavations and adjacent structures and property; include structural calculations to support plan.

B. Shop Drawings: Indicate soil densification grid for each size and configuration footing requiring soils densification.

1.4 QUALITY ASSURANCE

A. Perform Work according to governing standards.

B. Prepare excavation protection plan under direct supervision of professional engineer experienced in design of this Work and licensed in State of Georgia.

PART 2 - PRODUCTS

2.1 Not Used.

PART 3 - EXECUTION

3.1 PREPARATION

A. Call local utility line information service not less than three working days before performing Work.

1. Request underground utilities to be located and marked within and surrounding construction areas.

B. Identify required lines, levels, contours, and datum.

C. Notify utility company to remove and relocate utilities.

D. Protect utilities indicated to remain from damage.

E. Protect plant life, lawns, rock outcroppings, and other features remaining as portion of final landscaping.

F. Protect bench marks, survey control points, existing structures, fences, sidewalks, paving, and curbs from excavating equipment and vehicular traffic.

3.2 SOIL DENSIFICATION - VIBRO-COMPACTION

A. Vibro-compact substrates below footing bearing surfaces for footings as indicated, before excavating Site.

B. Densify existing subsoils with relative density rating of compact to dense to attain relative density rating of very dense.

1. Densify subsoils to depth as required by design reports

C. Densification Equipment:

1. Depth Vibrator: Poker type with follower tubes with visible marking every 12 inches to enable insertion depth measurement.
2. Motion: radial in horizontal plane.
3. Eccentric Force: As required
4. Data Acquisition System: Record amps or pressure of vibrator motor over time and depth.

D. Perform densification in presence of Geotechnical Engineer directly under each footing with vibrator inserted in grid pattern at maximum 6 feet o.c.

1. Arrange compaction grid for each footing for maximum number of insertion points and with outermost insertion points within bearing area of footings.
2. Adjust compaction grid arrangement and spacing as directed by Geotechnical Engineer to achieve required densification.

E. Insert vibrator to maximum specified depth. Densify soils for 30 seconds or other time as directed by Geotechnical Engineer. Withdraw vibrator every 12 inches (300 mm) increments and repeat densification at each increment.

1. When subsurface obstruction prevents vibrator insertion to specified depth, request instructions from Geotechnical Engineer to compensate for obstruction.

F. Tolerances:

1. Maximum Deviation from Center of Completed Compaction: 8 inches from indicated position.
2. Maximum Deviation from Vertical: 4 degrees during vibrator insertion.

3.3 EXCAVATION

A. Underpin adjacent structures which may be damaged by excavation Work.

B. Excavate subsoil to accommodate building foundations, and construction operations.

C. Excavate to working elevation for piling Work.

D. Compact disturbed load bearing soil in direct contact with foundations to original bearing capacity; perform compaction according to Section 312323.

E. Slope banks with machine to angle of repose or less until shored.

F. Do not interfere with 45 degree bearing splay of foundations.

G. Grade top perimeter of excavation to prevent surface water from draining into excavation.

H. Trim excavation. Remove loose matter.

I. Remove lumped subsoil, boulders, and rock up to 1/3 cu yd measured by volume. Remove larger material as specified in Section 312323.

J. Notify Architect/Engineer of unexpected subsurface conditions.

K. Correct areas over excavated with as directed by Architect/Engineer.

L. Remove excess and unsuitable material from Site.

M. Repair or replace items indicated to remain damaged by excavation.

3.4 FIELD QUALITY CONTROL

A. Request inspection of excavation and controlled fill operations according to governing code.

B. Request visual inspection of bearing surfaces by inspection agency before installing subsequent Work.

3.5 PROTECTION

A. Prevent displacement or loose soil from falling into excavation; maintain soil stability.

B. Protect bottom of excavations and soil adjacent to and beneath foundation from freezing.

C. Protect structures, utilities and other facilities from damage caused by settlement, lateral movement, undermining, washout, and other hazards created by earth operations.

END OF SECTION 312316

SECTION 312316.01 – UNCLASSIFIED EXCAVATION FOR UTILITIES

PART 1 - GENERAL

1.1 SECTION INCLUDES

A. The work called for by this section shall consist of clearing and grubbing, loosening, loading, removing, and disposing of, in the specified manner, all wet and dry materials (including rock) encountered that must be removed for construction purposes; furnishing, placing, and maintaining all sheeting, shoring, bracing, and timbering necessary for the proper protection and safety of the work, the workmen, the public, and adjacent property and improvements; the dewatering of trenches and other excavations; the preparation of fills and embankments; the removal of unsuitable material from outside the normal limits of excavation and, where ordered by the Engineer, their replacement with suitable materials; and all other grading or excavation work incidental to or necessary for the work. This work shall be performed as specified below.

1.2 UNIT PRICE - MEASUREMENT AND PAYMENT

A. Unclassified Excavation for Utilities:

1. Unclassified Excavation for Utilities is not a pay item. It shall be considered an integral part of the construction, and unit prices bid for items with which Unclassified Excavation for Utilities is connected shall be full compensation for this item and for all labor, materials, and equipment required to complete the item in accordance with the drawing and specifications.
2. Includes clearing and grubbing, loosening, loading, removing, and disposing of, in the specified manner, all wet and dry materials (including rock) encountered that must be removed for construction purposes; furnishing, placing, and maintaining all sheeting, shoring, bracing, and timbering necessary for the proper protection and safety of the work, the workmen, the public, and adjacent property and improvements; the dewatering of trenches and other excavations; the preparation of fills and embankments; the removal of unsuitable material from outside the normal limits of excavation and, where ordered by the Engineer, their replacement with suitable materials; and all other grading or excavation work incidental to or necessary for the work.

1.3 QUALITY ASSURANCE

A. Codes and Standards: Perform excavation work in compliance with applicable requirements of governing authorities having jurisdiction.

1.4 JOB CONDITIONS

A. Existing Utilities: Locate existing underground utilities in areas of work. If utilities are to remain in place, provide adequate means of support and protection during earthwork operations.

B. Should uncharted, or incorrectly charted, piping or other utilities be encountered during excavation, consult utility owner immediately for directions. Cooperate with Owner and utility

companies in keeping respective services and facilities in operation. Repair damaged utilities to satisfaction of utility owner.

C. Do not interrupt existing utilities serving facilities occupied and used by Owner or others, during occupied hours, except when permitted in writing by Engineer and then only after acceptable temporary utility services have been provided.
   1. Provide minimum of 48-hour notice to Engineer, and receive written notice to proceed before interrupting any utility.

D. Demolish and completely remove from site existing underground utilities indicated to be removed. Coordinate with utility companies for shut-off of services if lines are active.

E. Use of Explosives: Do not bring explosives onto site or use in work.

F. Preserve from damage surveying monuments, property pins, and similar items. If disturbed or damaged by construction operations, pay the cost of restoration by a registered surveyor.

G. Costs for locating, maintaining, and protecting existing facilities shall be merged in the unit price of the pipeline.

H. Protect structures, utilities, sidewalks, pavements, and other facilities from damage caused by settlement, lateral movement, undermining, washout and other hazards created by earthwork operations.

1.5 PROTECTION

A. Protect excavations by shoring, bracing, sheet piling, underpinning, or other methods required to prevent cave-in or loose soil from falling into excavation.

B. Underpin adjacent structures which may be damaged by excavation work, including service utilities and pipe chases.

C. Notify Engineer of unexpected subsurface conditions and discontinue work in affected area until notification to resume work.

D. Protect bottom of excavations and soil adjacent to and beneath foundations from frost.

E. Grade excavation top perimeter to prevent surface water run-off into excavation.

F. Protect excavation bottoms against freezing when atmospheric temperature is less than 35°F.

G. Protect trees, shrubbery, fences, poles, and all other property and surface structures during construction operations unless their removal for purposes of construction is authorized by Engineer. Fences, poles, or other man made surface improvements which are moved or disturbed shall be restored to the original conditions after construction is completed. Trees, shrubbery, or other vegetation which are approved for removal in order to facilitate construction operations shall be removed completely, including stumps and main roots. Responsibility for damage or claims for damage caused by construction operations to shrubbery or other landscape improvements which were not authorized for removal by Engineer shall be assumed by Contractor.

1.6 SAFETY

A. Barricades, Guards, and Safety Provisions: Place and maintain barricades, fences, construction signs, torches, flashing lights, lanterns, guards, and flagmen as required during the progress of the construction work and until it is safe for traffic to use the roads and streets. Material piles, equipment, and pipe which may serve as obstructions to traffic shall be enclosed by fences or barricades and shall be protected by proper lights when the visibility is poor. The rules and regulations of OSHA and appropriate authorities respecting safety provisions shall be observed.

B. Structure Protection: Provide temporary support, protection, and maintenance of underground and surface structures, drains, sewers, and other obstructions encountered during the progress of the work. Structures which may have been disturbed shall be restored upon completion of the work.

1.7 DEVIATIONS OCCASIONED BY STRUCTURES OR UTILITIES

A. Wherever obstructions are encountered during the progress of the work which occupy the space required for the pipeline, Engineer shall have the authority to change the drawings and order a deviation from the line and grade or arrange with the Owners of the structures for the removal, relocation, or reconstruction of the obstructions.

B. Where gas, water, telephone, electrical, or other existing utilities directly interfere with the vertical or horizontal alignment of the pipeline, Engineer will order a change in grade or alignment or will arrange with the Owners of the utilities for their removal.

1.8 DUST CONTROL

A. When ordered by Engineer, furnish and distribute over traveled road surfaces which have not been fully restored an application of regular flake calcium chloride having a minimum calcium chloride content of 77 percent, or a brine solution consisting of 1.5 pound of calcium chloride and one pound of sodium chloride per 100 gallons of water applied by a pressure distributor. Rate of application shall be 3 pounds/square yard for the flake calcium chloride, and 0.48 gallon/square yard for brine solution.

B. Whenever dust control is necessary, it shall be considered an integral part of the work, and no separate payment shall be made for it.

1.9 MAINTENANCE OF TRAFFIC AND CLOSING OF STREETS

A. Carry on the work in a manner which will cause a minimum of interruption to traffic, and do not close to through travel more than two consecutive blocks, including the cross street intersected. Where traffic must cross open trenches, provide bridges at street intersections and driveways. Post signs indicating that a street is closed and necessary detour signs for the proper maintenance of traffic. Before closing any streets notify responsible municipal authorities.

PART 2 - PRODUCTS

2.1 SOIL MATERIALS

A. Satisfactory soil materials are defined as those complying with ASTM D2487 unified soil classification system groups GW, GP, GM, SM, SW and SP.

B. Unsatisfactory soil materials are defined as those complying with ASTM D2487 unified soil classification system groups GC, SC, ML, MH, CL, CH, OL, OH and PT.

C. Drainage Fill: Washed, evenly graded mixture of crushed stone, or crushed or uncrushed gravel, with 100% passing a 1-1/2" sieve and not more than 5% passing a No. 4 sieve.

D. Backfill and Fill Materials: Satisfactory soil materials of clay, rock or gravel not larger than 2" in any dimension, free of debris, waste, frozen materials, vegetable and other deleterious matter.

PART 3 - EXECUTION

3.1 PREPARATION OF THE SITE

A. Before starting construction, remove from the work site all vegetable growth (except as hereinafter excluded), debris, and/or other objectionable matter as well as any buildings and/or other structures that the drawings and/or the Engineer specifically indicate are to be removed. Dispose of this refuse material in a manner acceptable to the Engineer.

B. In certain areas it may be desirable for existing trees, shrubs, or other vegetation on the site to be preserved for the permanent landscape. Such vegetation may be shown on the drawings, specifically listed in the specifications, marked on the site, or identified by the Engineer. In no case damage or remove such growth without written permission from the Owner.

C. If the area to be excavated is occupied by trees, brush, or other vegetable growth, clear such growth and grub the excavated area, and remove all large roots to a depth of not less than 2' below the bottom of the proposed construction. Dispose of the growth removed in a manner satisfactory to the Engineer. Fill all holes or cavities created during this work that extend below the subgrade elevation with suitable material, and compact to the same density as the surrounding material.

D. Trees, cultivated shrubs, etc., that are situated within public rights-of-way and/or construction easements through private property but not directly within the excavation area shall remain undisturbed unless it is necessary to remove them so that the work can be performed safely and unless their removal is specifically ordered by the Engineer. Take special precautions to protect and preserve such growth throughout all stages of the construction.

E. Preparation of the site shall be considered an integral part of the excavation and one for which no separate payment shall be allowed.

3.2 EXCAVATION

A. Excavation is Unclassified, and includes excavation to subgrade elevations regardless of character of materials and obstructions encountered. It shall be understood that any reference to rock, earth, or any other material on the drawings is not to be taken as an indication of classified excavation or the quantity of either rock, earth, or any other material involved.

B. The bidder shall draw his own conclusions as to the conditions to be encountered.

3.3 UNSUITABLE MATERIALS

A. Wherever muck, quicksand, soft clay, swampy ground, or other material unsuitable for foundations, subgrade, or backfilling is encountered, remove it and continue excavation until suitable material is encountered. The material removed shall be disposed of in the manner described below. Then refill the areas excavated for this reason with 1" to 2" crushed stone up to the level of the lines, grades, and/or cross sections shown on the drawings. The top 6" of this refill shall be No. 57 crushed stone for bedding.

3.4 ROCKS AND BOULDERS

A. Any material that is encountered within the limits of the required excavation that cannot be removed by traditional excavation methods, including rock, boulders, masonry, hard pan, chert, shale, street and sidewalk pavements, and/or similar materials, shall be considered as unclassified excavation, and no separate payment will be made therefor.

B. Should rock be encountered in the excavation, remove it by hammering, chipping or otherwise. Blasting will not be allowed.

C. Excavate rock to a minimum horizontal distance of 12” outside the pipe in each direction and to a depth of not less than 12” below the bottom of the pipe if rock extends to such depth. Then backfill the space below the pipe with No. 57 crushed stone, tamp to the proper grade, and make ready for construction.

3.5 DISPOSAL OF MATERIALS

A. Whenever practicable, all materials removed by excavation that are suitable for backfilling pipe trenches or for other purposes shown on the drawings or directed by the Engineer shall be used for these purposes. Any materials not so used shall be considered waste materials and disposed of by the Contractor as specified below.

B. Waste materials may be deposited in spoil areas at locations approved by the Engineer. Waste materials shall be properly disposed of off-site if no spoil area is approved by the Engineer. Provide a copy of executed property owner agreements to Engineer. Do not leave in unsightly piles but instead spread in uniform layers, neatly level, and shape to drain. Seed as specified in Section 02920, Lawns and Grasses.

C. Once any part of the work is completed, properly dispose of all surplus or unused materials (including waste materials) left within the construction limits of that work. Leave the surface of the work in a neat and workmanlike condition, as described below.

D. The disposal of waste materials shall be considered an integral part of the excavation work and one for which no separate payment shall be allowed.

3.6 EXCAVATION FOR MANHOLES AND STRUCTURES

A. Excavation for manholes, inlets, and other incidental structures shall not be greater in horizontal area than that required to allow a 2' clearance between the outer surface of the structure and the walls of the adjacent excavation or of the sheeting used to protect it. The bottom of the excavation shall be true to the required shape and elevation shown on the drawings. No earth backfilling will be permitted under manholes, inlets, headwalls, or similar structures. Should

the Contractor excavate below the elevations shown or specified, he shall at his own expense, fill the void with either concrete or granular material approved by the Engineer.

3.7 SHEETING, SHORING AND BRACING

A. Take special care to avoid damage wherever excavation is being done. Sufficiently sheet, shore, and brace the sides of all excavations to prevent slides, cave-ins, settlement, or movement of the banks and to maintain the specified trench widths. Use solid sheets in wet, saturated, or flowing ground. All sheeting, shoring, and bracing shall have enough strength and rigidity to withstand the pressures exerted, to keep the walls of the excavation properly in place, and to protect all persons and property from injury or damage. Separate payment will not be made for sheeting, shoring, and bracing, which are considered an incidental part of the excavation work.

B. Wherever employees may be exposed to moving ground or cave-ins, shore and lay back exposed earth excavation surfaces more than 5' high to a stable slope, or else provide some equivalent means of protection. Effectively protect trenches less than 5' deep when examination of the ground indicates hazardous ground movement may be expected. Guard the walls and faces of all excavations in which employees are exposed to danger from moving ground by a shoring system, sloping of the ground, or some equivalent protection.

C. Comply with all OSHA standards in determining where and in what manner sheeting, shoring, and bracing are to be done. The sheeting, shoring, and bracing system shall be designed by a professional engineer licensed in the State of Georgia and shall be subject to approval by the Engineer. However, such approval does not relieve the Contractor of the sole responsibility for the safety of all employees, the effectiveness of the system, and any damages or injuries resulting from the lack or inadequacy of sheeting, shoring, and bracing.

D. Where excavations are made adjacent to existing buildings or structures or in paved streets or alleys, take particular care to sheet, shore, and brace the sides of the excavation so as to prevent any undermining of or settlement beneath such structures or pavement. Underpin adjacent structures wherever necessary, with the approval of the Engineer.

E. Do not leave sheeting, shoring, or bracing materials in place unless this is called for by the drawings, ordered by the Engineer, or deemed necessary or advisable for the safety or protection of the new or existing work or features. Remove these materials in such a manner that the new structure or any existing structures or property, whether public or private, will not be endangered or damaged and that cave-ins and slides are avoided.

F. Fill and compact all holes and voids left in the work by the removal of sheeting, shoring, or bracing as specified herein.

G. The Contractor may use a trench box, which is a prefabricated movable trench shield composed of steel plates welded to a heavy steel frame. The trench box shall be designed to provide protection equal to or greater than that of an appropriate shoring system.

H. Dewatering: Prevent surface water and subsurface or ground water from flowing into excavations and from flooding project site and surrounding area.

I. Do not allow water to accumulate in excavations. Remove water to prevent softening of subgrade foundation bottoms, undercutting footings, and soil changes detrimental to stability of subgrades and foundations. Provide and maintain pumps, well points, sumps, suction and

discharge lines, and other dewatering system components necessary to convey water away from excavations.

J. Establish and maintain temporary drainage ditches and other diversions outside excavation limits to convey rain water and water removed from excavations to collecting or run-off areas. Do not use trench excavations as temporary drainage ditches.

3.8 BORROW EXCAVATION

A. Whenever the backfill of excavated areas or the placement of embankments requires more material than is available from authorized excavations, or whenever the backfill material from such excavations is unsuitable, then obtain additional material from other sources. This may require the opening of borrow pits at points accessible to the work. In such cases, make suitable arrangements with the property owner and pay all incidental costs, including any royalties, for the use of the borrowed material. Before a borrow pit is opened, the quality and suitability of its material shall be approved by the Engineer.

B. Excavate borrow pits in such a way that the remaining surfaces and slopes are reasonably smooth and that adequate drainage is provided over the entire area. Construct drainage ditches wherever necessary to provide outlets for water to the nearest natural channel, thus preventing the formation of pools in the pit area. Leave the sides of borrow pit cuts at a maximum slope of 2:1 unless otherwise directed by the Engineer.

C. Properly clear and grub borrow pits, and remove all objectionable matter from the borrow pit material before placing it in the backfill.

D. The taking of materials from borrow pits for use in the construction of backfill, fills, or embankments shall be considered an incidental part of the work; no separate payment shall be made for this.

3.9 BACKFILLING

A. Conduct backfilling around manholes, inlets, outfalls, and/or structures in the same manner as specified for water lines, gravity sewers and/or force mains except that even greater care is necessary to prevent damage to the utility structure.

B. Perform backfilling so as not to disturb or injure any pipe and/or structure against which the backfill is being placed. If any pipe or structure is damaged and/or displaced during backfilling, open up the backfill and make whatever repairs are necessary.

3.10 MAINTENANCE

A. Seed and maintain in good condition all excavated areas, trenches, fills, embankments, and channels until final acceptance by the Owner.

B. Maintain trench backfill at the approximate level of the original ground surface by periodically adding backfill material wherever necessary and whenever directed to do so by the Engineer. Continue such maintenance until final acceptance of the project, or until the Engineer issues a written release.

3.11 SLOPES

A. Neatly trim all open cut slopes, and finish to conform either with the slope lines shown on the drawings or the directions of the Engineer. Leave the finished surfaces of bottom and sides in reasonably smooth and uniform planes like those normally obtainable with hand tools, though the Contractor will not be required to use hand methods if he is able to obtain the required degree of evenness with mechanical equipment. Conduct grading operations so that material is not removed or loosened beyond the required slope.

END OF SECTION 312316.01

SECTION 312319 - DEWATERING

PART 1 - GENERAL

1.1 SUMMARY

A. Section Includes:

1. Dewatering system.
2. Surface water control system.
3. Monitoring wells.
4. System operation and maintenance.
5. Water disposal.

1.2 UNIT PRICE - MEASUREMENT AND PAYMENT

A. Dewatering:

1. Dewatering is not a pay item. It shall be considered an integral part of the construction, and unit prices bid for items with which Dewatering is connected shall be full compensation for this item and for all labor, materials, and equipment required to complete the item in accordance with the drawing and specifications.

1.3 DEFINITIONS

A. Dewatering includes the following:

1. Lowering of ground water table and intercepting horizontal water seepage to prevent ground water from entering excavations and trenches.
2. Reducing piezometric pressure within strata to prevent failure or heaving of excavations and trenches.
3. Disposing of removed water.

B. Surface Water Control: Removal of surface water within open excavations.

1.4 SYSTEM DESCRIPTION

A. Provide dewatering and surface water control systems to permit Work to be completed on dry and stable subgrade.

B. Furnish standby equipment stored at Project site and ready for immediate use upon failure of dewatering equipment.

C. Design dewatering systems to:

1. Lower water table within areas of excavation to permit Work to be completed on dry and stable subgrade.
2. Relieve hydrostatic pressures in confined water bearing strata below excavation to eliminate risk of uplift or other instability of excavation.
3. Prevent damage to adjacent properties, buildings, structures, utilities, and facilities from construction operations.
4. Prevent loss of fines, quick condition, or softening of foundation subgrade.
5. Maintain stability of sides and bottoms of excavations and trenches.

D. Design surface water control systems to:

1. Collect and remove surface water and seepage entering excavation.

1.5 SUBMITTALS

A. N/A

1.6 CLOSEOUT SUBMITTALS

A. Project Record Documents: Record actual locations and depths of capped wells and piping abandoned in place.

1.7 QUALITY ASSURANCE

A. Comply with authorities having jurisdiction for the following:

1. Drilling and abandoning of wells used for dewatering systems.
2. Water discharge and disposal from pumping operations.

B. Obtain permit from EPA under National Pollutant Discharge Elimination System (NPDES), for storm water discharge from construction sites.

C. Assume sole responsibility for dewatering and surface water control systems and for loss or damage resulting from partial or complete failure of protective measures and settlement or resultant damage caused by ground water control operations.

D. Perform Work in accordance with governing standards.

E. Maintain one copy of each document on site.

PART 2 - PRODUCTS

2.1 DEWATERING EQUIPMENT

A. Furnish materials in accordance with governing standards.

PART 3 - EXECUTION

3.1 EXAMINATION

A. Conduct additional borings and investigations to supplement subsurface investigations identified in Section 003100 as required to complete dewatering system design.

B. Call Local Utility Line Information service not less than (3) working days before performing Work.

1. Request underground utilities to be located and marked within and surrounding construction areas.

C. Employ licensed land surveyor to provide following documentation:

1. Survey existing adjacent buildings, structures, and improvements for position and elevation of principal elements before and after completion of dewatering operations.

3.2 PREPARATION

A. Protect existing adjacent buildings, structures, and improvements from damage caused by dewatering operations.

3.3 MONITORING WELLS

A. Install monitoring wells

B. Test each monitoring well point to verify installation is performing properly.

C. Install piezometers, calibrate, and test for proper operation.

D. Protect monitoring well standpipes from damage by construction operations.

E. Maintain accessibility to monitoring wells continuously during construction operations.

F. Maintain monitoring wells until groundwater is allowed to return to normal level.

3.4 DEWATERING SYSTEM

A. Install Work in accordance with governing standards.

3.5 SURFACE WATER CONTROL SYSTEM

A. Provide ditches, berms, and other devices to divert and drain surface water from excavation area.

B. Divert surface water and seepage water within excavation areas into sumps and pump water in accordance with requirements of agencies having jurisdiction.

C. Control and remove unanticipated water seepage into excavation.

3.6 SYSTEM OPERATION AND MAINTENANCE

A. Operate dewatering system continuously until backfilling is complete.

B. Provide 24-hour supervision of dewatering system by personnel skilled in operation, maintenance, and replacement of system components.

C. When dewatering system cannot control water within excavation, notify Architect/Engineer and stop excavation work.

D. Modify dewatering and surface water control systems when operation causes or threatens to cause damage to new construction, existing site improvements, adjacent property, or adjacent water wells.

E. Do not discontinue dewatering operations without Architect/Engineer's approval.

3.7 SYSTEM REMOVAL

A. Remove dewatering and surface water control systems after dewatering operations are discontinued.

B. Remove piezometers and monitoring wells.

C. Repair damage caused by dewatering and surface water control systems or resulting from failure of systems to protect property.

3.8 FIELD QUALITY CONTROL

A. After dewatering system is installed, perform pumping test to determine when selected pumping rate lowers water level in well below pump intake. Adjust pump speed, discharge volume, or both to ensure proper operation of each pump.

END OF SECTION 312319

SECTION 312500 - EROSION AND SEDIMENTATION CONTROLS

PART 1 - GENERAL

1.1 SUMMARY

A. The work shall include erosion and sediment control on all cut and fill operations, excavation, backfill, or other construction activities within the limits of the construction site, within any temporary or permanent easements, and within any borrow site used during the period of construction. The protection of these sites shall continue throughout the construction period. During dry weather, sprinkle the sites with water or use other means as necessary to provide dust control.

1. The Contractor shall fully comply with the guidelines as specified in the Georgia Erosion and Sedimentation Control Act of 1975 (as amended).
2. Land disturbance activity shall not commence until the Land Disturbance Permit has been obtained by the owner, provided that a permit is required for the project.
3. Compliance with the Georgia Department of Natural Resources Environmental Protection Division (EPD) must be maintained at all times. If the project disturbs more than 1 acre, the contractor will assist the owner in preparing a Notice of Intent (NOI). Contractor will not start land disturbing activities until 3 days after the NOI has been filed with EPD.
4. Use of erosion and sedimentation control measures shall be included in all permanent construction work and temporary construction work outside the rights-of-way where necessary as a result of construction operations, such as haul roads and equipment storage sites.
5. The Erosion and sedimentation controls shown on the drawings and included in these specifications are minimal requirements. The Contractor's methods of construction may require additional erosion and sedimentation controls not indicated on the Drawings or in these Specifications.
6. The Contractor shall be solely responsible for control of erosion within the project site and prevention of sedimentation in any adjacent areas.

1.2 UNIT PRICE - MEASUREMENT AND PAYMENT

A. Erosion and sediment control:

1. Erosion and sediment control is a lump sum pay item. It shall be considered an integral part of the construction, and shall include all materials, installation labor, repair, alterations to devices and plans as dictated by the construction activities, and any and all associated appurtenances. The erosion and sedimentation control items shown on these drawings are a minimum lump sum prices for which erosion and sediment control is connected shall be full compensation for this item and for all labor, materials, and equipment required to complete the item in accordance with the drawing, associated specifications and standards specifications of the governing authorities.

1.3 QUALITY ASSURANCE

A. All erosion and sediment control work shall comply with applicable requirements of governing authorities having jurisdiction. The specifications and drawings are not represented as being comprehensive, but rather convey the intent to provide complete slope protection and erosion control for both the Owner's and adjacent property.

B. Erosion control measures shall be established at the beginning of construction and maintained during the entire period of construction. On-site areas, which are subject to severe erosion, and off-site areas which are especially vulnerable to damage from erosion and/or sedimentation, are to be identified and receive special attention.

C. All land-disturbing activities are to be planned and conducted to minimize the size of the area to be exposed at any one time, and the length of time of exposure.

D. Surface water runoff originating upgrade of exposed areas should be controlled to reduce erosion and sediment loss during the period of exposure.

E. When the increase in the peak rates and velocity of storm water runoff resulting from a land-disturbing activity is sufficient to cause accelerated erosion of the receiving stream, provide measures to control both the velocity and rate of release so as to minimize accelerated erosion and increased sedimentation of the stream.

F. All land-disturbing activities shall be planned and conducted so as to minimize off-site sedimentation discharge and damage.

G. The Contractor is responsible for cleaning out and disposing of all sediment once the storage capacity of the sediment facility is reduced by one-half.

H. Frequent inspections of erosion and sediment control measures by the Contractor are required. Repair or replacement shall be made promptly.

PART 2 - PRODUCTS

2.1 MATERIALS

A. Temporarily stabilize areas from which topsoil has been removed and topsoil stockpiles by seeding fast growing annuals such as cereal, rye, annual ryegrass, Sudan grass, and millet that provide quick protection. These annual grasses shall be seed certified by the State Department of Agriculture and shall be worked into the soil when the site is prepared for final seeding of more permanent species. To promote temporary vegetation establishment, use commercial lime and fertilizer on exposed areas subject to severe erosion.

B. Strawbales: Bales shall be either wire bound or string tied with bindings orientated around sides rather than over and under.

C. Crushed stone for stabilized construction entrance shall conform to ASTM Designation C-33, size No. 2 (1-1/2" to 2-1/2").

D. Silt fence shall be "Envirofence" preassembled silt fence by Mirafi, Inc., or its equivalent.

E. Sandbags anchored with steel rods or brush obtained from clearing operations may also be used to control sediment loss.

PART 3 - EXECUTION

3.1 PROTECTION

A. Conduct construction so as to provide the site with maximum protection from erosion at all times.

B. Conduct excavation activities to provide erosion and sediment control as follows:
1. Do not start clearing and excavation until a firm construction schedule is submitted to and approved by the Engineer. Continuously coordinate the schedule with the clearing and excavation activity.
2. Place the excavated material so as not to block any drainage area. Replace this excavated material in the trench immediately after repairs or installations have been completed and are approved by the Engineer.
3. Retain natural vegetation whenever feasible.
4. Restore and cover exposed areas subject to erosion as quickly as possible by means of seeding and mulching. Use diversion ditches or other methods as appropriate to prevent storm water from running over the exposed area until seeding is established as specified.
5. Take particular care along streams and drainage ditches so that fallen trees, debris, and excavated material will not adversely affect the streamflow. Exercise care to minimize the destruction of streambanks. Wherever the streambanks are affected by construction, reduce the slope of the streambanks to provide a suitable condition for vegetative protection. Minimize land exposure in terms of area and time.
6. Cover exposed excavated areas with mulch or vegetation.
7. Mechanically retard the rate of runoff water.
8. Trap the sediment contained in the runoff water.
9. Divert water from erosive areas.
10. Take care during the hauling of materials, etc., to keep vehicles from creating a severe erosion problem. Proper scheduling of operations and prompt repair of ruts created during this operation is necessary from this source.
11. Control dust by sprinkling or other means as necessary to keep it to a minimum.
12. Stabilize roadways and driveways as soon as feasible.

C. Regrade and sod surfaces eroded or otherwise damaged during any and all construction operations.

3.2 STRAW BALE BARRIERS

A. Excavation shall be to the width of the bale and the length of the proposed barrier to a minimum depth of 4 inches.

B. Bales shall be placed in a single row, lengthwise on proposed line, with ends of adjacent bales tightly abutting one another. In swales and ditches the barrier shall extend to such a length that the bottoms of the end bales are higher in elevation than the top of the lowest middle bale.

C. Staking shall be accomplished to securely anchor bales by driving at least two stakes or rebars through each bale and a minimum of 8 inches into the ground.

D. The gaps between bales shall be filled by wedging straw.

E. The excavated soil shall be backfilled against the barrier. Backfill shall conform to ground level on the downhill side and shall be built up to 4 inches on the uphill side. Loose straw shall then be scattered over the area immediately uphill from a straw barrier.

3.3 STABILIZED CONSTRUCTION ENTRANCE

A. Stone size: Use ASTM designation C-33, size No. 2 (1-1/2" to 2-1/2"). Use crushed stone.

B. Length: As effective, but not less than 150 feet.

C. Thickness: Not less than eight (8) inches.

D. Width: The full width of all points of ingress or egress, but not less than 20 feet.

E. Washing: When necessary, wheels shall be cleaned to remove sediment prior to entrance onto public right-of-way. When washing is required, it shall be done on an area stabilized with crushed stone, which drains into an approved sediment trap or sediment basin. All sediment shall be prevented from entering any storm drain, ditch, or watercourse through use of sand bags, gravel, boards or other approved methods.

F. Maintenance: The entrance shall be maintained in a condition, which will prevent tracking or flowing of sediment onto public rights-of-way. This may require periodic top dressing with additional stone as conditions demand and repair and/or cleanout of any measures used to trap sediment. It is recommended that a layer of medium grade filter fabric be placed on the ground prior to placing stone. This would help prevent infiltration of fines into the stone. All sediment spilled, dropped, washed or tracked onto public rights-of-way shall be removed immediately.

3.4 SILT FENCING

A. Excavate a 6-inch by 6-inch trench along the lower perimeter of the site, when using premanufactured silt fencing.

B. Install the silt fence in accordance with the manufacturer's recommendations and the details shown on the plans.

C. Pile brush in a row along the perimeter of the land disturbing activities. Windrow brush along contour as close as possible. Brush may require compaction.

3.5 INLET PROTECTION

A. Excavation around the drop inlet shall be performed to accommodate the width of the bale and to a minimum depth of 4 inches.

B. Placement of bales shall be lengthwise in a single row surrounding the drop inlet. Adjacent bales shall be pressed together and loose straw then wedged between them to prevent water entering between bales.

C. Staking shall be accomplished to securely anchor bales by driving at least two stakes or rebars through each bale and a minimum of 8 inches into the soil.

D. Backfill shall consist of the excavated soil and be compacted against the straw barrier.

3.6 DUST CONTROL

A. Dust generated from the contractor's performance of the work, either inside or outside the right-of-way shall be controlled by the contractor by applying either water or calcium chloride.

B. Water and calcium chloride shall be provided in the amounts and locations in accordance with general local practice.

3.7 LAND DISTURBANCE PERMIT AND/OR GENERAL PERMIT

A. The Contractor shall fully comply with the guidelines as specified in the Georgia Erosion and Sedimentation Control Act of 1975 (as amended).

B. Land disturbance activity shall not commence until the Land Disturbance Permit has been obtained by the owner, provided that a permit is required for the project.

C. Compliance with the Georgia Department of Natural Resources Environmental Protection Division (EPD) must be maintained at all times. If the project disturbs more than 1 acre, the contractor will assist the owner in preparing a Notice of Intent (NOI). Contractor will not start land disturbing activities until 3 days after the NOI has been filed with EPD.

END OF SECTION 312500

This page intentionally left blank.

SECTION 321216 - ASPHALT PAVING

PART 1 - GENERAL

1.1 RELATED DOCUMENTS

A. Drawings and general provisions of the Contract, including General and Supplementary Conditions and Division 1 Specification Sections, apply to this Section.

1.2 SUMMARY

A. This Section includes the following:
   1. Hot-mix asphalt paving.
   2. Hot-mix asphalt patching.
   3. Hot-mix asphalt paving overlay.
   4. Pavement-marking paint.
   5. Cold milling of existing hot-mix asphalt pavement.

B. Related Sections include the following:
   1. Division 2 Section "Earthwork" for aggregate subbase and base courses and for aggregate pavement shoulders.

1.3 DEFINITIONS

A. Hot-Mix Asphalt Paving Terminology: Refer to ASTM D 8 for definitions of terms.

B. DOT: Department of Transportation.

1.4 SYSTEM DESCRIPTION

A. Provide hot-mix asphalt paving according to materials, workmanship, and other applicable requirements of standard specifications of state or local DOT.
   1. Standard Specification: City of Oneonta Standard Specifications / DOT.
   2. Measurement and payment provisions and safety program submittals included in standard specifications do not apply to this Section.

1.5 SUBMITTALS

A. Product Data: For each type of product indicated. Include technical data and tested physical and performance properties.

B. Job-Mix Designs: Certification, by authorities having jurisdiction, of approval of each job mix proposed for the Work.

1.6 QUALITY ASSURANCE

A. Manufacturer Qualifications: A qualified manufacturer.
   1. Manufacturer shall be a paving-mix manufacturer registered with and approved by authorities having jurisdiction or the DOT of the state in which Project is located.

B. Regulatory Requirements: Comply with Standards of local regulatory authority for asphalt paving work.

C. Asphalt-Paving Publication: Comply with AI MS-22, "Construction of Hot Mix Asphalt Pavements," unless more stringent requirements are indicated.

1.7 DELIVERY, STORAGE, AND HANDLING

A. Deliver pavement-marking materials to Project site in original packages with seals unbroken and bearing manufacturer's labels containing brand name and type of material, date of manufacture, and directions for storage.

B. Store pavement-marking materials in a clean, dry, protected location within temperature range required by manufacturer. Protect stored materials from direct sunlight.

1.8 PROJECT CONDITIONS

A. Environmental Limitations: Do not apply asphalt materials if subgrade is wet or excessively damp or if the following conditions are not met:
   1. Prime and Tack Coats: Minimum surface temperature of 60 deg F.
   2. Asphalt Base Course: Minimum surface temperature of 40 deg F and rising at time of placement.
   3. Asphalt Surface Course: Minimum surface temperature of 60 deg F at time of placement.

B. Pavement-Marking Paint: Proceed with pavement marking only on clean, dry surfaces and at a minimum ambient or surface temperature of 40 deg F for oil-based materials, 50 deg F for water-based materials, and not exceeding 95 deg F.

PART 2 - PRODUCTS

2.1 AGGREGATES

A. General: Use materials and gradations that have performed satisfactorily in previous installations.

B. Coarse Aggregate: ASTM D 692, sound; angular crushed stone, crushed gravel, or properly cured, crushed blast-furnace slag.

C. Fine Aggregate: ASTM D 1073, sharp-edged natural sand or sand prepared from stone, gravel, properly cured blast-furnace slag, or combinations thereof.
   1. For hot-mix asphalt, limit natural sand to a maximum of 20 percent by weight of the total aggregate mass.

D. Mineral Filler: ASTM D 242, rock or slag dust, hydraulic cement, or other inert material.

2.2 ASPHALT MATERIALS

A. Asphalt Binder: AASHTO MP 1.

B. Asphalt Cement: ASTM D 946 for penetration-graded material.

C. Prime Coat: ASTM D 2027, medium-curing cutback asphalt.

D. Prime Coat: Asphalt emulsion prime complying with local regulatory requirements.

E. Tack Coat: ASTM D 977, emulsified asphalt or ASTM D 2397, cationic emulsified asphalt, slow setting, diluted in water, of suitable grade and consistency for application.

F. Water: Potable.

G. Undersealing Asphalt: ASTM D 3141, pumping consistency.

2.3 AUXILIARY MATERIALS

A. Sand: ASTM D 1073, Grade Nos. 2 or 3.

B. Joint Sealant: ASTM D 3405, hot-applied, single-component, polymer-modified bituminous sealant.

C. Pavement-Marking Paint: Latex, waterborne emulsion, lead and chromate free, ready mixed, complying with FS TT-P-1952, with drying time of less than 3 minutes.

D. Glass Beads: AASHTO M 247, Type 1.

2.4 MIXES

A. Hot-Mix Asphalt: Dense, hot-laid, hot-mix asphalt plant mixes approved by authorities having jurisdiction and designed according to procedures in AI MS-2, "Mix Design Methods for Asphalt Concrete and Other Hot-Mix Types."
   1. Provide mixes with a history of satisfactory performance in geographical area where Project is located.
   2. Provide mixes complying with composition, grading, and tolerance requirements in ASTM D 3515 for the following nominal, maximum aggregate sizes:
      a. Base Course: 1 inch.
      b. Surface Course: 1/2 inch.

PART 3 - EXECUTION

3.1 EXAMINATION

A. Verify that subgrade is dry and in suitable condition to support paving and imposed loads.

B. Proof-roll subbase using heavy, pneumatic-tired rollers to locate areas that are unstable or that require further compaction.

C. Proceed with paving only after unsatisfactory conditions have been corrected.

3.2 PATCHING

A. Hot-Mix Asphalt Pavement: Saw cut perimeter of patch and excavate existing pavement section to sound base. Excavate rectangular or trapezoidal patches, extending 12 inches into

adjacent sound pavement, unless otherwise indicated. Cut excavation faces vertically. Remove excavated material. Recompact existing unbound-aggregate base course to form new subgrade.

B. Portland Cement Concrete Pavement: Break cracked slabs and roll as required to reseat concrete pieces firmly.
   1. Pump hot undersealing asphalt under rocking slabs until slab is stabilized or, if necessary, crack slab into pieces and roll to reseat pieces firmly.
   2. Remove disintegrated or badly cracked pavement. Excavate rectangular or trapezoidal patches, extending into adjacent sound pavement, unless otherwise indicated. Cut excavation faces vertically. Recompact existing unbound-aggregate base course to form new subgrade.

C. Tack Coat: Apply uniformly to vertical surfaces abutting or projecting into new, hot-mix asphalt paving at a rate of 0.05 to 0.15 gal./sq. yd..
   1. Allow tack coat to cure undisturbed before applying hot-mix asphalt paving.
   2. Avoid smearing or staining adjoining surfaces, appurtenances, and surroundings. Remove spillages and clean affected surfaces.

D. Patching: Fill excavated pavements with hot-mix asphalt base mix and, while still hot, compact flush with adjacent surface.

3.3 SURFACE PREPARATION

A. General: Immediately before placing asphalt materials, remove loose and deleterious material from substrate surfaces. Ensure that prepared subgrade is ready to receive paving.
   1. Sweep loose granular particles from surface of unbound-aggregate base course. Do not dislodge or disturb aggregate embedded in compacted surface of base course.

B. Prime Coat: Apply uniformly over surface of compacted unbound-aggregate base course at a rate of 0.15 to 0.50 gal./sq. yd. Apply enough material to penetrate and seal but not flood surface. Allow prime coat to cure for 72 hours minimum.
   1. If prime coat is not entirely absorbed within 24 hours after application, spread sand over surface to blot excess asphalt. Use enough sand to prevent pickup under traffic. Remove loose sand by sweeping before pavement is placed and after volatiles have evaporated.
   2. Protect primed substrate from damage until ready to receive paving.

C. Tack Coat: Apply uniformly to surfaces of existing pavement at a rate of 0.05 to 0.15 gal./sq. yd.
   1. Allow tack coat to cure undisturbed before applying hot-mix asphalt paving.
   2. Avoid smearing or staining adjoining surfaces, appurtenances, and surroundings. Remove spillages and clean affected surfaces.

3.4 HOT-MIX ASPHALT PLACING

A. Machine place hot-mix asphalt on prepared surface, spread uniformly, and strike off. Place asphalt mix by hand to areas inaccessible to equipment in a manner that prevents segregation of mix. Place each course to required grade, cross section, and thickness when compacted.
   1. Place hot-mix asphalt base course in number of lifts and thicknesses indicated.
   2. Place hot-mix asphalt surface course in single lift.
   3. Spread mix at minimum temperature of 250 deg F.

4. Begin applying mix along centerline of crown for crowned sections and on high side of one-way slopes, unless otherwise indicated.
5. Regulate paver machine speed to obtain smooth, continuous surface free of pulls and tears in asphalt-paving mat.

B. Place paving in consecutive strips not less than 10 feet wide unless infill edge strips of a lesser width are required.
1. After first strip has been placed and rolled, place succeeding strips and extend rolling to overlap previous strips. Complete a section of asphalt base course before placing asphalt surface course.

C. Promptly correct surface irregularities in paving course behind paver. Use suitable hand tools to remove excess material forming high spots. Fill depressions with hot-mix asphalt to prevent segregation of mix; use suitable hand tools to smooth surface.

3.5 JOINTS

A. Construct joints to ensure a continuous bond between adjoining paving sections. Construct joints free of depressions with same texture and smoothness as other sections of hot-mix asphalt course.
1. Clean contact surfaces and apply tack coat to joints.
2. Offset longitudinal joints, in successive courses, a minimum of 6 inches.
3. Offset transverse joints, in successive courses, a minimum of 24 inches.
4. Construct transverse joints as described in AI MS-22, "Construction of Hot Mix Asphalt Pavements."
5. Compact joints as soon as hot-mix asphalt will bear roller weight without excessive displacement.
6. Compact asphalt at joints to a density within 2 percent of specified course density.

3.6 COMPACTION

A. General: Begin compaction as soon as placed hot-mix paving will bear roller weight without excessive displacement. Compact hot-mix paving with hot, hand tampers or vibratory-plate compactors in areas inaccessible to rollers.
1. Complete compaction before mix temperature cools to 185 deg F.

B. Breakdown Rolling: Complete breakdown or initial rolling immediately after rolling joints and outside edge. Examine surface immediately after breakdown rolling for indicated crown, grade, and smoothness. Correct laydown and rolling operations to comply with requirements.

C. Intermediate Rolling: Begin intermediate rolling immediately after breakdown rolling while hot-mix asphalt is still hot enough to achieve specified density. Continue rolling until hot-mix asphalt course has been uniformly compacted to the following density:
1. Average Density: 96 percent of reference laboratory density according to AASHTO T 245, but not less than 94 percent nor greater than 100 percent.
2. Average Density: 92 percent of reference maximum theoretical density according to ASTM D 2041, but not less than 90 percent nor greater than 96 percent.

D. Finish Rolling: Finish roll paved surfaces to remove roller marks while hot-mix asphalt is still warm.

E. Edge Shaping: While surface is being compacted and finished, trim edges of pavement to proper alignment. Bevel edges while asphalt is still hot; compact thoroughly.

F. Repairs: Remove paved areas that are defective or contaminated with foreign materials and replace with fresh, hot-mix asphalt. Compact by rolling to specified density and surface smoothness.

G. Protection: After final rolling, do not permit vehicular traffic on pavement until it has cooled and hardened.

H. Erect barricades to protect paving from traffic until mixture has cooled enough not to become marked.

3.7 INSTALLATION TOLERANCES

A. Thickness: Compact each course to produce the thickness indicated within the following tolerances:
   1. Base Course: Plus or minus 1/2 inch.
   2. Surface Course: Plus 1/4 inch, no minus.

B. Surface Smoothness: Compact each course to produce a surface smoothness within the following tolerances as determined by using a 10-foot straightedge applied transversely or longitudinally to paved areas:
   1. Base Course: 1/4 inch.
   2. Surface Course: 1/8 inch.
   3. Crowned Surfaces: Test with crowned template centered and at right angle to crown. Maximum allowable variance from template is 1/4 inch.

3.8 SURFACE TREATMENTS

A. Fog Seals: Apply fog seal at a rate of 0.10 to 0.15 gal./sq. yd. to existing asphalt pavement and allow to cure. With a fine sand, lightly dust areas receiving excess fog seal.

3.9 PAVEMENT MARKING

A. Do not apply pavement-marking paint until layout, colors, and placement have been verified with Engineer.

B. Allow paving to age for 30 days before starting pavement marking.

C. Sweep and clean surface to eliminate loose material and dust.

D. Apply paint with mechanical equipment to produce pavement markings, of dimensions indicated, with uniform, straight edges. Apply at manufacturer's recommended rates to provide a minimum wet film thickness of 15 mils.
   1. Broadcast glass spheres uniformly into wet pavement markings at a rate of 6 lb/gal..

3.10 FIELD QUALITY CONTROL

A. Testing Agency: Owner will engage a qualified independent testing and inspecting agency to perform field tests and inspections and to prepare test reports.
   1. Testing agency will conduct and interpret tests and state in each report whether tested Work complies with or deviates from specified requirements.

B. Additional testing and inspecting, at Contractor's expense, will be performed to determine compliance of replaced or additional work with specified requirements.

C. Thickness: In-place compacted thickness of hot-mix asphalt courses shall be determined according to ASTM D 3549.

D. Surface Smoothness: Finished surface of each hot-mix asphalt course shall be tested for compliance with smoothness tolerances.

E. In-Place Density: Testing agency will take samples of uncompacted paving mixtures and compacted pavement according to ASTM D 979.

F. Remove and replace or install additional hot-mix asphalt where test results or measurements indicate that it does not comply with specified requirements.

3.11 DISPOSAL

A. Except for material indicated to be recycled, remove excavated materials from Project site and legally dispose of them in an EPA-approved landfill.
   1. Do not allow excavated materials to accumulate on-site.

END OF SECTION 321216

This page intentionally left blank.

SECTION 329221 – LAWNS AND GRASSES

PART 1 - GENERAL

1.1 SUMMARY

A. This Section includes seeding, sodding, and landscape replacement.

B. Landscape replacement work shall be performed in all disturbed areas and shall include, but not necessarily be limited to, all seed bed preparation; the supplying and placing of soil additives, seed, sod, and mulch wherever required by the drawings or directed by the Engineer.

1.2 DEFINITIONS

A. Finish Grade: Elevation of finished surface of planting soil.

B. Manufactured Soil: Soil produced off-site by homogeneously blending mineral soils or sand with stabilized organic soil amendments to produce topsoil or planting soil.

C. Planting Soil: Native or imported topsoil, manufactured topsoil, or surface soil modified to become topsoil; mixed with soil amendments.

D. Subgrade: Surface or elevation of subsoil remaining after completing excavation, or top surface of a fill or backfill immediately beneath planting soil. Refer to Division 1 Section "Earthwork" and "Excavation Support and Protection".

1.3 SUBMITTALS

A. Product Data: Refer to Division 1 Section "Submittal Procedures". For each type of product indicated.

B. Product certificates/certificates of inspection.

C. Planting Schedule: Indicating anticipated planting dates.

1.4 QUALITY ASSURANCE

A. No Substitutions: Do not make substitutions. Replace disturbed landscape materials with identical materials. If identical landscape material is not obtainable, submit proof of non-availability from a minimum of 6 suppliers to the Engineer for review by a Landscape Architect, together with proposal for use of equivalent material.

B. Installer's Field Supervision: Require Installer to maintain an experienced full-time supervisor on Project site when planting is in progress.

1.5 DELIVERY, STORAGE, AND HANDLING

A. Sod: Harvest, deliver, store, and handle sod according to requirements in TPI's "Specifications for Turfgrass Sod Materials" and "Specifications for Turfgrass Sod Transplanting and Installation" in its "Guideline Specifications to Turfgrass Sodding."

1.6 JOB CONDITIONS

A. Proceed with the complete landscape work as rapidly as portions of site become available, working within seasonal limitations for each kind of turf areas required.

B. Utilities: Determine location of underground utilities and perform work in a manner which will avoid possible damage. Hand cultivate as required. Maintain grade stakes set by others until removal is mutually agreed upon by parties concerned.

C. Planting Time: Plant or install materials during normal planting seasons for each type of landscape work required.

PART 2 - PRODUCTS

2.1 SEED

A. Seed Species: State-certified seed of grass species to match adjacent areas. In unplanted areas, as follows:
1. Warm Season (April 30-August 15): 100% hulled common bermuda, 2#/1000 sf.
2. Cool Season (March 1-April 30): or August 15-November 30): 100% Kentucky 31 tall fescue, 5#/1000 sf.
3. When seeding March 1 to April 1 or October 1 to November 30, add an additional 3 pounds per 1000 square feet of annual ryegrass.

2.2 TURFGRASS SOD

A. Turfgrass Sod: Approved, complying with TPI's "Specifications for Turfgrass Sod Materials" in its "Guideline Specifications to Turfgrass Sodding." Furnish viable sod of uniform density, color, and texture, strongly rooted, and capable of vigorous growth and development when planted.

B. Turfgrass Species: To match disturbed area and/or adjacent yards.

2.3 PLANTING MATERIALS

A. Topsoil: ASTM D 5268, pH range of 5.5 to 7, a minimum of 2 percent organic material content; free of stones 1 inch or larger in any dimension and other extraneous materials harmful to plant growth.
1. Topsoil Source: Reuse surface soil stockpiled on-site and supplement with imported or manufactured topsoil from off-site sources when quantities are insufficient. Verify suitability of stockpiled surface soil to produce topsoil.

B. Inorganic Soil Amendments:
1. Lime: ASTM C 602, Class T or O, agricultural limestone containing a minimum 80 percent calcium carbonate equivalent.

2. Sulfur: Granular, biodegradable, containing a minimum of 90 percent sulfur, with a minimum 99 percent passing through No. 6 sieve and a maximum 10 percent passing through No. 40 sieve.
3. Iron Sulfate: Granulated ferrous sulfate containing a minimum of 20 percent iron and 10 percent sulfur.
4. Aluminum Sulfate: Commercial grade, unadulterated.
5. Sand: Sharp, clean, washed sand, free of toxic materials.

C. Fertilizer:
1. Bonemeal: Commercial, raw or steamed, finely ground; a minimum of 1 percent nitrogen and 10 percent phosphoric acid.
2. Superphosphate: Commercial, phosphate mixture, soluble; a minimum of 20 percent available phosphoric acid.
3. Commercial Fertilizer: Complete fertilizer of neutral character furnished in standard containers that are clearly marked with the name, weight, and guaranteed analysis of the contents and that ensure proper protection in transportation and handling; and in compliance with all local, state, and federal fertilizer laws, with some elements derived from organic sources and containing recommended percentages of available plant nutrients.
4. Slow-Release Fertilizer: Granular or pelleted fertilizer consisting of 50 percent water-insoluble nitrogen, phosphorus, and potassium in the following composition:
   a. Composition: 20 percent nitrogen, 10 percent phosphorous, and 10 percent potassium, by weight.

D. Mulches:
1. Straw Mulch for Seeding Operations: Provide air-dry, clean, mildew- and seed-free, salt hay or threshed straw of wheat, rye, oats, or barley.
2. Filtration/Separation Fabric: Water permeable filtration fabric of fiberglass or polypropylene fabric.
3. Mulch and Erosion Control Matting and Blankets for Slopes:
   a. Curlex blanket excelsior blanket.
   b. Hi-Velocity curlex blanket excelsior blanket by American Excelsior Company, P.O. Box 5067, Arlington, Texas 76011.
4. Erosion Control Matting and Blankets for Ditches and Drainage Channels:
   a. Enkamat Matting #7020 by AZKO Industrial Systems, Ridgefield Business Center, Suite 18, Asheville, North Carolina 28802.
   b. Miramat 1000 by Mirafi, Inc., P.O. Box 240967, Charlotte, North Carolina 28224.
5. Straw Mulch for Landscaping Restoration: Provide air-dry, clean, mildew- and seed-free, pine straw.
6. Bark Mulch for Landscaping Restoration: Provide bark mulch as required to match adjacent areas.

2.4 PLANTING SOIL MIX

A. Planting Soil Mix: Submit proposed topsoil test results for approval.

PART 3 - EXECUTION

3.1 LAWN PREPARATION

A. Newly Graded Subgrades: Loosen subgrade to a minimum depth of 4 inches. Remove stones larger than 2 inches in any dimension and sticks, roots, rubbish, and other extraneous matter and legally dispose of them off Owner's property.

B. Surface Preparation::
1. Loosen surface soil to a depth of at least of 6 inches. Apply soil amendments and fertilizers according to planting soil mix proportions and mix thoroughly into top 4 inches of soil. Till soil to a homogeneous mixture of fine texture.
2. Remove stones larger than 2 inches in any dimension and sticks, roots, trash, and other extraneous matter.
3. Legally dispose of waste material, including grass, vegetation, and turf, off Owner's property.

C. Finish Grading: Grade planting areas to a smooth, uniform surface plane with loose, uniformly fine texture. Grade to within plus or minus 1/2 inch of finish elevation. Roll and rake, remove ridges, and fill depressions to meet finish grades. Limit fine grading to areas that can be planted within 2 days.

D. Moisten prepared lawn areas before planting if soil is dry. Water thoroughly and allow surface to dry before planting. Do not create muddy soil.

E. Restore areas if eroded or otherwise disturbed after finish grading and before planting.

3.2 SEEDING

A. Rake seed lightly into top 1/8 inch of topsoil, roll lightly, and water with fine spray.

B. Protect all seeded areas by spreading straw mulch. Spread uniformly at a minimum rate of 2 tons/acre to form a continuous blanket 1-1/2 inches in loose depth over seeded areas. Spread by hand, blower, or other suitable equipment.

C. Hydroseeding New Lawns:
1. Mix specified seed, fertilizer and pulverized mulch in water, using equipment specifically designed for hydroseed application. Continue mixing until uniformly blended into homogenous slurry suitable for hydraulic application.
2. Apply slurry uniformly to all areas to be seeded. Rate of application as required to obtain specified seed sowing rate above.

3.3 SODDING

A. Sodding New Lawns:
1. Lay sod within 72 hours from time of stripping. Do not plant dormant sod or if ground is frozen.
2. Lay sod between March 1 and October 15 only unless soil conditions are favorable and written permission is obtained from the Engineer.
3. Lay sod to form a solid mass with tightly fitted joints. Butt ends and sides of sod strips; to not overlap. Stagger strips to offset joints in adjacent courses. Work from boards to avoid damage to subgrade or sod. Tamp or roll lightly to ensure contact with subgrade.

Work sifted soil into minor cracks between pieces of sod; remove excess to avoid smothering of adjacent grass. Lay sod on slopes with short dimension running up and down.

4. Anchor sod on slopes, 3:1 or greater and in drainage swales to prevent slippage, with 1 by 2 wood pegs driven flush with sod.
5. Saturate sod with fine water spray within two hours of planting. During first week, water daily or more frequently as necessary to maintain moist soil to a minimum depth of 1-1/2 inches below sod.
6. Two weeks after the sod is installed, top dress and thoroughly water it. Top dressing shall consist of the following:
   a. 1/2 to 1 pound: 38 percent urea formaldehyde per 1,000 square feet
   b. 20 pounds: 6-12-12 per 1,000 square feet
7. No equipment, material storage, construction traffic, etc., will be permitted on newly sodded areas.
8. Dispose of all surplus material off site.

3.4 CLEANUP AND PROTECTION

A. During landscape work, keep pavements clean and work area in an orderly condition.

B. Protect landscape work and materials from damage due to landscape operations, operations by other contractors and trades and trespassers. Maintain protection during installation and maintenance periods. Treat, repair or replace damaged landscape work as directed.

END OF SECTION 329221

This page intentionally left blank.

SECTION 330505.36 - VACUUM TESTING

PART 1 - GENERAL

1.1 SUMMARY

A. Section Includes: Vacuum testing of manholes.

1.2 UNIT PRICE - MEASUREMENT AND PAYMENT

A. Vacuum Testing:

1. Vacuum Testing is not a pay item. It shall be considered an integral part of the construction, and unit prices bid for items with which Vacuum Testing is connected shall be full compensation for this item and for all labor, materials, and equipment required to complete the item in accordance with the drawing and specifications

1.3 SUBMITTALS

A. Submit following items prior to start of testing:

1. Testing procedures.
2. List of test equipment.
3. Testing sequence schedule.
4. Provisions for disposal of flushing and test water.
5. Certification of test gage calibration.

B. Test and Evaluation Reports: Indicate results of manhole tests.

C. Qualifications Statement:

1. Qualifications for applicator.

1.4 QUALITY ASSURANCE

A. Perform Work according to ASTM C1244 standards.

B. Applicator: Company specializing in performing Work of this Section with three years' experience.

PART 2 - PRODUCTS

2.1 VACUUM TESTING

A. Equipment:

1. Vacuum pump.
2. Vacuum line.
3. Vacuum Tester Base:

   a. Compression band seal.
   b. Outlet port.

4. Shutoff valve.
5. Stopwatch.
6. Plugs.
7. Vacuum Gage: Calibrated to 0.1 in. Hg.

PART 3 - EXECUTION

3.1 EXAMINATION

A. Verify that manholes are ready for testing.

B. Verify that manholes are backfilled.

3.2 FIELD QUALITY CONTROL

A. Manhole Testing:

1. Repair both outside and inside of joint to ensure permanent seal.
2. Test manholes with manhole frame set in place.
3. Vacuum Testing:

   a. Comply with ASTM C1244 (C1244M).
   b. Plug pipe openings; securely brace plugs and pipe.
   c. Inflate compression band to create seal between vacuum base and structure.
   d. Connect vacuum pump to outlet port with valve open, then draw vacuum to 10 in. Hg.
   e. Close valve.
   f. Manhole Test Duration in Seconds: Perform vacuum test duration according to ASTM C1244.

   g. Record vacuum drop during test period.
   h. If vacuum drop is greater than 1 in. Hg during testing period, repair and retest manhole.

i. If vacuum drop of 1 in. Hg does not occur during test period, manhole is acceptable; discontinue testing.
j. If vacuum test fails to meet 1 in. Hg drop in specified time after repair, repair and retest manhole.

4. If unsatisfactory testing results are achieved, repair manhole and retest until result meets criteria.
5. Repair visible leaks regardless of quantity of leakage.

END OF SECTION 330505.36

This page intentionally left blank.

SECTION 330505.41 - AIR TESTING

PART 1 - GENERAL

1.1 SUMMARY

A. Section Includes: Low-pressure air testing of gravity sewer piping.

1.2 UNIT PRICE - MEASUREMENT AND PAYMENT

A. Air Testing:

1. Air Testing is not a pay item. It shall be considered an integral part of the construction, and unit prices bid for items with which Air Testing is connected shall be full compensation for this item and for all labor, materials, and equipment required to complete the item in accordance with the drawing and specifications

1.3 SUBMITTALS

A. Submit following items prior to start of testing:

1. Testing procedures.
2. List of test equipment.
3. Testing sequence schedule.
4. Provisions for disposal of flushing and test water.
5. Certification of test gage calibration.

B. Test and Evaluation Reports: Indicate results of piping tests.

C. Qualifications Statement:

1. Qualifications for applicator.

1.4 QUALITY ASSURANCE

A. Perform Work according to UNI-B-6 standards.

B. Applicator: Company specializing in performing Work of this Section with three years' experience.

PART 2 - PRODUCTS

2.1 AIR TESTING

A. Equipment:

1. Air compressor.
2. Air supply line.
3. Shutoff valves.
4. Pressure regulator.
5. Pressure relief valve.
6. Stopwatch.
7. Plugs.
8. Pressure Gage: Calibrated to 0.1 psi.

PART 3 - EXECUTION

3.1 EXAMINATION

A. Verify that piping is ready for testing.

B. Verify that trenches are backfilled.

3.2 PREPARATION

A. Section 017000 - Execution and Closeout Requirements: Requirements for preparation.

B. Lamping:

1. Lamp gravity piping after flushing and cleaning.
2. Perform lamping operation by shining light at one end of each pipe section between manholes.
3. Observe light at other end.
4. Pipe not installed with uniform line and grade will be rejected.
5. Remove and reinstall rejected pipe sections.
6. Clean and lamp until pipe section is installed to uniform line and grade.

C. Plugs:

1. Plug outlets, wye branches, and laterals.
2. Brace plugs to resist test pressures.

3.3 FIELD QUALITY CONTROL

A. Low-Pressure Air Testing: Perform air testing in accordance with UNI-B-6
1. Test each reach of gravity sewer piping between manholes.

2. Introduce air pressure slowly.
3. Record drop in pressure during testing period.
4. If piping fails, test reach of piping in incremental stages until leaks are isolated, repair leaks, and retest entire reach between manholes.
5. If unsatisfactory testing results are achieved, make necessary repairs and retest until result meets criteria.
6. Repair visible leaks regardless of quantity of leakage.

END OF SECTION 330505.41

This page intentionally left blank.

SECTION 330561 – CONCRETE MANHOLES

PART 1 - GENERAL

1.1 SUMMARY

A. Section Includes:

1. Modular precast concrete manholes and structures with tongue-and-groove joints and transition to cover frame, covers, anchorage, and accessories.
2. Masonry manhole and structure sections with masonry transition to cover frame, covers, anchorage, and accessories.
3. Doghouse manhole connections to existing sanitary sewer lines.
4. Bedding and cover materials.
5. Vertical adjustment of existing manholes and structures.

1.2 DEFINITIONS

A. Bedding: Specialized material placed under manhole prior to installation and subsequent backfill operations.

1.3 SUBMITTALS

A. Product Data: Manhole materials, manhole steps, manhole casting, concrete mix design, coal tar epoxy, manufacturer information for manhole covers, component construction, features, configuration, and dimensions.

B. Shop Drawings:

1. Structure locations and elevations.
2. Sizes and elevations of piping, and penetrations.
3. Precast concrete manholes, including frames and covers.

C. Manufacturer's Certificate: Products meet or exceed specified requirements.

D. Manufacturer Instructions: Installation requirements, including storage and handling procedures.

E. Source Quality-Control Submittals: Indicate results of factory tests and inspections.

F. Field Quality-Control Submittals: Indicate results of Contractor-furnished tests and inspections.

G. Qualifications Statement:

1. Qualifications for manufacturer.

1.4 CLOSEOUT SUBMITTALS

A. Project Record Documents: Record actual locations of manholes and connections, and record invert elevations.

1.5 QUALITY ASSURANCE

A. Perform Work according to ASTM C 478 standards.

1.6 DELIVERY, STORAGE, AND HANDLING

A. Storage:

1. Store materials according to manufacturer instructions.
2. Store precast concrete manholes and drainage structures to prevent damage to Owner's property or other public or private property.
3. Repair property damaged from materials storage.

B. Protection:

1. Protect materials from moisture and dust by storing in clean, dry location remote from construction operations areas.
2. Provide additional protection according to manufacturer instructions.

1.7 AMBIENT CONDITIONS

A. Cold Weather Requirements: Comply with ACI 530/530.1.

1.8 EXISTING CONDITIONS

A. Field Measurements:

1. Verify field measurements prior to fabrication.
2. Indicate field measurements on Shop Drawings.

PART 2 - PRODUCTS

2.1 CONCRETE MANHOLES

A. Normal-Traffic Precast Concrete Manholes: ASTM C 478, precast, reinforced concrete, of depth indicated, with provision for rubber gasketed joints.
1. Diameter: 48 inches minimum, unless otherwise indicated.
2. Ballast: Increase thickness of precast concrete sections or add concrete to base section, as required to prevent flotation.

3. Base Section: 6-inch minimum thickness for floor slab and 4-inch minimum thickness for walls and base riser section, and having base section with monolithic floor.
4. Riser Sections: 4-inch minimum thickness, and lengths to provide depth indicated.
5. Top Section: Concentric-cone type, unless eccentric-cone or flat-slab-top type is indicated. Top of cone of size that matches grade rings.
6. Gaskets: ASTM C 443, rubber.
7. Grade Rings: Include two or three reinforced-concrete rings, of 6- to 9-inch total thickness, that match 24-inch diameter frame and cover.
8. Steps: Polypropylene plastic with 3/8" steel reinforcing rod encapsulated. Include width that allows worker to place both feet on one step and is designed to prevent lateral slippage off step. Cast or anchor into base, riser, and top section sidewalls with steps at 12- to 16-inch intervals. Omit steps for manholes less than 36 inches deep.
9. Pipe Openings: Pre-cast at the proper alignment and elevation, or cored in the field. Saw-cut or chipped openings will not be allowed.
10. Pipe Connectors: ASTM C 923, resilient, of size required, for each pipe connecting to base section. Installed in pre-cast openings, as manufactured by Kor-N-Seal Co., or equivalent.
11. Drop Manholes: Provide drop manholes (Memphis Tees) where indicated and at all instances where the vertical drop through the manhole exceeds 2'-0".
12. Inverts: Inverts shall be precast by the manufacturer or poured with solid concrete in the field. Brick and mortar inverts are not allowed.
13. ALL MANHOLES SHALL BE MADE WITH XYPEX.

B. Manhole Frames and Covers:
1. ASTM A 536, Grade 60-40-18, ductile-iron castings designed for heavy-duty service, with machined bearing surfaces.
2. 305 pounds total weight, minimum.
3. 22" clear opening, minimum.
4. Include risers and adjusting rings as required for each installation.
5. Covers: Solid (no holes), City of Rome Clock Tower Logo with lettering "SEWER" cast into cover, 23 ½" diameter.
6. Manufacturer: East Jordan Iron Works Model V-1480, V-2480 (Water Tight), or pre-approved equivalent.

C. Manhole Frames and Bolt Down Covers:
1. ASTM A 536, Grade 60-40-18, ductile-iron castings designed for heavy-duty service, with machined bearing surfaces.
2. 305 pounds total weight, minimum.
3. 22" clear opening, minimum.
4. Include risers and adjusting rings as required for each installation.
5. Covers: Solid (no holes), City of Rome Clock Tower Logo with lettering "SEWER" cast into cover, 23 ½" diameter.
6. Manufacturer: East Jordan Iron Works Model 1310APT/1311ZPT Assembly or pre-approved equivalent

2.2 EXTERNAL MANHOLE SEALING SLEEVE

A. Description: All manhole joints and the connection between the grade rings to the frame and cover shall be wrapped in an external rubber sleeve to prevent inflow and infiltration.

B. Rubber sleeve shall be a single continuous 60 mil minimum EPDM seal, with width as required to seal the actual number of grade rings installed, but in no case less than 12".

C. Each seal shall have a minimum 2" x ¼" mastic strip on the top and bottom edge. Mastic shall be non-hardening butyl rubber sealant.

D. Manufacturers:
   1. Infi-Shield by Sealing Systems, Inc.
   2. Or approved equivalent.

2.3 CONCRETE

A. General: Cast-in-place concrete according to ACI 318, ACI 350R, and the following:
   1. Cement: ASTM C 150, Type II.
   2. Fine Aggregate: ASTM C 33, sand.
   3. Coarse Aggregate: ASTM C 33, crushed gravel.
   4. Water: Potable.

B. Portland Cement Design Mix: 4000 psi minimum, with 0.45 maximum water-cementitious materials ratio.
   1. Reinforcement Fabric: ASTM A 185, steel, welded wire fabric, plain.
   2. Reinforcement Bars: ASTM A 615/A 615M, Grade 60, deformed steel.

C. Structure Channels and Benches: Factory or field formed from concrete. Portland cement design mix, 4000 psi minimum, with 0.45 maximum water-cementitious materials ratio. Include channels and benches in manholes.
   1. Channels: Concrete invert, formed to same width as connected piping, with height of vertical sides to three-fourths of pipe diameter. Form curved channels with smooth, uniform radius and slope.
      a. Invert Slope: 1 percent through manhole.
   2. Benches: Concrete, sloped to drain into channel.
      a. Slope: 8 percent.

D. Ballast and Pipe Supports: Portland cement design mix, 3000 psi minimum, with 0.58 maximum water-cementitious materials ratio.
   1. Reinforcement Fabric: ASTM A 185, steel, welded wire fabric, plain.
   2. Reinforcement Bars: ASTM A 615/A 615M, Grade 60, deformed steel.

2.4 ACCESSORIES

A. Steps:

   1. Polypropylene plastic with 3/8" steel reinforcing rod encapsulated. Include width that allows worker to place both feet on one step and is designed to prevent lateral slippage off step. Cast or anchor into base, riser, and top section sidewalls with steps at 12- to 16-inch intervals. Omit steps for manholes less than 36 inches deep.

B. Foundation Slab:

   1. Cast-in-place concrete as specified in Section 033000 - Cast-in-Place Concrete

2. Top Surface: Level.

C. Strap Anchors:

1. Shape: Bent steel.
2. Size: As indicated.
3. Finish: Galvanized.

D. Joint Sealant: Comply with ASTM C990 (C990M).

E. Fasteners: Stainless steel; ASTM F593.

F. Geotextile Filter Fabric:

1. Description:

a. Non-biodegradable.
b. Woven.

2. Comply with AASHTO M288.

G. Concrete: As specified in Section 033000 - Cast-in-Place Concrete.

H. Grout: As specified in Section 033000 - Cast-in-Place Concrete.

I. Soil Backfill from Above Pipe to Finish Grade.

2.5 SOURCE QUALITY CONTROL

A. Provide shop inspection and testing of completed assembly.

B. Certificate of Compliance:

1. If manufacturer is approved by authorities having jurisdiction, submit certificate of compliance indicating Work performed at manufacturer's facility conforms to Contract Documents.
2. Specified shop tests are not required for Work performed by approved manufacturer.

PART 3 - EXECUTION

3.1 EXAMINATION

A. Verify that items provided by other Sections of Work are properly sized and located.

B. Verify that built-in items are in proper location and are ready for roughing into Work.

C. Verify that excavation base is ready to receive Work and excavations and that dimensions and elevations are as indicated.

3.2 PREPARATION

A. Mark each precast structure by indentation or waterproof paint showing date of manufacture, manufacturer, and identifying symbols and numbers as indicated for its intended use.

B. Coordinate placement of inlet and outlet pipe or duct sleeves as required by other Sections.

C. Do not install manholes and structures where Site conditions induce loads exceeding structural capacity of manholes or structures.

D. Inspect precast concrete manholes and structures immediately prior to placement in excavation to verify that they are internally clean and free from damage; remove and replace damaged units.

3.3 INSTALLATION

A. Conduct operations not to interfere with, interrupt, damage, destroy, or endanger integrity of surface structures or utilities in immediate or adjacent areas.

B. Correct over-excavation with coarse aggregate.

C. Remove large stones or other hard matter impeding consistent backfilling or compaction.

D. Protect manhole from damage or displacement while backfilling operation is in progress.

E. Excavating:

1. As specified in Section 312316 - Excavation and in indicated locations and depths.
2. Provide clearance around sidewalls of manhole or structure for construction operations.
3. If ground water is encountered, prevent accumulation of water in excavations;.
4. Where possibility exists of watertight manhole or structure becoming buoyant in flooded excavation, anchor manhole or structure to avoid flotation as approved by Architect/Engineer.

F. Base and Alignment:

1. Install manholes supported at proper grade and alignment on compacted crushed-stone bedding.
2. Grout base of shaft sections to achieve slope to exit piping, trowel smooth, and contour to form continuous drainage channel.
3. Form and place manhole or structure cylinders plumb and level, to correct dimensions and elevations.

G. Attachments:
1. Set cover frames and covers level to correct elevations without tipping.

H. Backfilling: As required

I. Coating
1. Xypex admixture shall be used in the manhole concrete.

J.

K. Precast Concrete Manholes:

1. Lift precast components at lifting points designated by manufacturer.
2. When lowering manholes into excavations and joining pipe to units, take precautions to ensure that interior of pipeline and structure remains clean.
3. Assembly:

    a. Assemble multisection manholes and structures by lowering each section into excavation.
    b. Install rubber gasket joints between precast sections according to manufacturer recommendations.
    c. Lower, set level, and firmly position base section before placing additional sections.

4. Remove foreign materials from joint surfaces and verify that sealing materials are placed properly.
5. Maintain alignment between sections by using guide devices affixed to lower section.
6. Joint sealing materials may be installed on Site or at manufacturer's plant.
7. Verify that installed manholes meet required alignment and grade.
8. Remove knockouts or cut structure to receive piping without creating openings larger than required to receive pipe; fill annular spaces with mortar.
9. Cut pipe flush with interior of structure.
10. Shape inverts through manhole as indicated.

L. Cast-in-Place Concrete Manholes:

1. Bear firmly and fully on compacted crushed stone bedding.
2. Place and cure concrete as specified in Section 033000 - Cast-in-Place Concrete.

M. Doghouse Manholes and Structures:

1. Stake out location and burial depth of existing sewer line in area of proposed manhole or structure.
2. Carefully excavate around existing sewer line to adequate depth for foundation slab installation.
3. Protect existing pipe from damage.
4. Cut out soft spots and replace with granular fill.
5. Bear firmly and fully on compacted crushed stone bedding.
6. Install precast concrete and/or Construct cast-in-place concrete manhole or structure around existing pipe according to applicable Paragraphs in this Section.
7. Grout pipe entrances as specified in Section 033000 - Cast-in-Place Concrete.
8. Block upstream flow at existing manhole or structure with expandable plug.
9. Use hydraulic saw to cut existing pipe at manhole or structure entrance and exit and along pipe length at a point halfway up OD on each side of pipe.
10. Bottom half of pipe is to remain as manhole flow channel.
11. Saw cut to smooth finish with top half of pipe flush with interior of manhole or structure.
12. Grout base of manhole or structure to achieve slope to manhole or structure channel as specified in Section 033000 - Cast-in-Place Concrete and trowel smooth.

N. Sanitary Manhole Drop Connections: As indicated.

O. Installation Standards: Install Work according to governing standards.

3.4 FIELD QUALITY CONTROL

A. Testing:
   1. Concrete Manhole Sections: As specified in Section 330505.36 - Vacuum Testing.

B. Equipment Acceptance: Adjust, repair, modify, or replace components failing to perform as specified and rerun tests.

3.5 ATTACHMENTS

A. None

END OF SECTION 330561

SECTION 333100 - SANITARY SEWERAGE PIPING

PART 1 - GENERAL

1.1 SUMMARY

A. Section Includes:

1. Sanitary sewerage piping.
2. Bedding and cover materials.

1.2 PERFORMANCE REQUIREMENTS

A. Gravity-Flow, Nonpressure-Piping Pressure Ratings: At least equal to system test pressure.

B. Force-Main Pressure Ratings: At least equal to system operating pressure, but not less than 200 psig.

1.3 SUBMITTALS

A. Product Data: Manufacturer information indicating pipe material to be used, pipe accessories, and all necessary appurtenances.

B. Manufacturer's Certificate: Products meet or exceed specified requirements.

C. Source Quality-Control Submittals: Indicate results of factory tests and inspections.

D. Field Quality-Control Submittals: Indicate results of Contractor-furnished tests and inspections.

E. Qualifications Statement:

1. Qualifications for manufacturer and installer.

1.4 CLOSEOUT SUBMITTALS

A. Project Record Documents: Record finished locations of pipe runs, connections, manholes, cleanouts, and invert elevations.

B. Identify and describe unexpected variations to subsoil conditions or discovery of uncharted utilities.

1.5 QUALITY ASSURANCE

A. Perform Work according to governing standards.

B. Manufacturer: Company specializing in manufacturing products specified in this Section with three years' experience.

C. Installer: Company specializing in performing Work of this Section with three years' experience.

D. Contractor or Subcontractor installing Residential Service lines shall have and provide a valid Plumbing License issued by the State of Georgia.

1.6 DELIVERY, STORAGE, AND HANDLING

A. Storage:

1. Store materials according to manufacturer instructions.
2. Store valves in shipping containers with labeling in place.

B. Protection:

1. Protect materials from moisture and dust by storing in clean, dry location remote from construction operations areas.
2. Block individual and stockpiled pipe lengths to prevent moving.
3. Provide additional protection according to manufacturer instructions.

1.7 EXISTING CONDITIONS

A. Field Measurements:

1. Verify field measurements prior to fabrication.
2. Indicate field measurements on Shop Drawings.

PART 2 - PRODUCTS

2.1 SANITARY SEWERAGE PIPING

A. Ductile-Iron Pipe: ASTM A 746, for push-on joints, size 4” to 64”, double thickness cement-lined, pressure class 200 minimum.
1. Standard-Pattern, Ductile-Iron Fittings: AWWA C110, ductile or gray iron, for push-on joints, cement-lined.
2. Compact-Pattern, Ductile-Iron Fittings: AWWA C153, for push-on joints, cement-lined.
3. Gaskets: AWWA C111, rubber.
4. Identification: All ductile iron sewer pipe shall have a green stripe painted on the top of the pipe. Field painting of the identification stripe is acceptable.
a. PVC Sewer Pipe and Fittings: According to the following:

B. Plastic Pipe:

1. Material: PVC Sewer Pipe and Fittings, 21” and Smaller.

a. Comply with ASTM D3034, SDR-26 minimum stiffness 115 psi @ 5% deflection
b. Smooth wall
c. 14' maximum joint length
d. Gasketed joints utilizing ASTM F 477, elastomeric seals and meeting AMTM D3212
e. Fittings manufactured specifically for use with heavy wall sewer pipe

C. PE, AWWA Pipe: AWWA C906, DR No. 11 (DIPS); with PE compound number required to give pressure rating not less than 200 psig.

1. PE, AWWA Fittings: AWWA C906, socket- or butt-fusion type, with DR number matching pipe and PE compound number required to give pressure rating not less than 200 psig

D. Vitrified Clay Pipe is not allowed.

E. Reinforced Concrete Sewer Pipe is not allowed.

2.2 MANHOLES

A. As specified in Section 330561 - Concrete Manholes.

B. As specified in Section 330562 – Manhole Rehabilitation Coating System.

2.3 CONCRETE PLACEMENT

A. Place cast-in-place concrete according to ACI 318 and ACI 350R.

2.4 FLEXIBLE COUPLINGS

A. Description:

1. Material: Resilient, chemical-resistant, elastomeric PVC.
2. Attachment: Two stainless-steel clamps, screws, and housings.

2.5 FLEXIBLE PIPE BOOTS FOR MANHOLE PIPE ENTRANCES

A. Description:
1. Comply with ASTM C923.
2. Attachment: Stainless-steel clamp and hardware.

2.6 MIXES

A. Grout: As specified.

2.7 ACCESSORIES

A. Pipe Markers: As specified in Section 330597 - Identification and Signage for Utilities.

2.8 SOURCE QUALITY CONTROL

A. Provide shop inspection and testing of pipe.

B. Certificate of Compliance:

1. If manufacturer is approved by authorities having jurisdiction, submit certificate of compliance indicating Work performed at manufacturer's facility conforms to Contract Documents.
2. Specified shop tests are not required for Work performed by approved manufacturer.

PART 3 - EXECUTION

3.1 EXAMINATION

A. Verify that excavation base is ready to receive Work of this Section.

B. Verify that excavations, dimensions, and elevations are as indicated.

3.2 PREPARATION

A. Correct over-excavation with coarse aggregate.

B. Remove large stones or other hard materials that could damage pipe or impede consistent backfilling or compaction.

C. Protect and support existing sewer lines, utilities, and appurtenances.

D. Utilities:

1. Maintain profiles of utilities.
2. Coordinate with other utilities to eliminate interference.
3. Notify Engineer if crossing conflicts occur.

3.3 INSTALLATION

A. Bedding:

1. Excavate pipe trench.
2. Place bedding material at trench bottom.
3. Level materials in continuous layer.

4. Maintain optimum moisture content of bedding material to attain required compaction density.

B. Piping:

1. Install pipe, fittings, and accessories according to ASTM D2321, and seal joints watertight.
2. Lay pipe to slope gradients as indicated.
3. Begin at downstream end of system and progress upstream.
4. Bedding: Install at sides and over top of pipe, to minimum compacted thickness of 6 inches.

C. Manholes:
1. As specified in Section 330561 - Concrete Manholes.
2. As specified in Section 330562 – Manhole Rehabilitation Coating System.

D. Backfilling:

1. Backfill around sides and to top of pipe with cover fill in minimum lifts of 6 inches.
2. Tamp fill in place, and compact.
3. Place and compact material immediately adjacent to pipes to avoid damage to pipe and prevent pipe misalignment.
4. Maintain optimum moisture content of bedding material as required to attain specified compaction density.

3.4 FIELD QUALITY CONTROL

A. Inspect interior of piping to determine whether line displacement or other damage has occurred. Inspect after approximately 24 inches of backfill is in place, and again at completion of Project.
1. Defects requiring correction include the following:
   a. Alignment: Less than full diameter of inside of pipe is visible between structures.
   b. Deflection: Flexible piping with deflection that prevents passage of ball or cylinder of size not less than 92.5 percent of piping diameter.
   c. Crushed, broken, cracked, or otherwise damaged piping.
   d. Infiltration: Water leakage into piping.
   e. Exfiltration: Water leakage from or around piping.
2. Replace defective piping using new materials, and repeat inspections until defects are within allowances specified.
3. Reinspect and repeat procedure until results are satisfactory.

B. Test new piping systems, and parts of existing systems that have been altered, extended, or repaired, for leaks and defects.
1. Do not enclose, cover, or put into service before inspection and approval.
2. Test completed piping systems according to authorities having jurisdiction.
3. Schedule tests and inspections with at least 24 hours' advance notice to Engineer.
4. Submit separate reports for each test.
5. Perform tests as follows:
   a. Sanitary Sewerage: Perform air test according to UNI-B-6.
   b. Force Mains: Perform test according to AWWA C600
      1) 150 psi at lowest point.

2) 0.11 gallons per hour per inch diameter per thousand feet.
3) Two hour minimum with 5+/- psi pressure difference.

6. Leaks and loss in test pressure constitute defects that must be repaired.
7. Replace leaking piping using new materials, and repeat testing until leakage is within allowances specified.

3.5 PROTECTION

A. Protect pipe and aggregate cover from damage or displacement until backfilling operation is in progress.

B. Cap open ends of piping during periods of Work stoppage.

3.6 ATTACHMENTS

A. None

END OF SECTION 333100

THE CITY OF
ROME, GEORGIA

WATER AND SEWER DIVISION

HORSELEG CREEK SANITARY SEWER PUMP STATION ADDITION

OWNER BID #-XXX-XX
PROJECT NUMBER 16120.04

APPENDIX "A"

THE CITY OF ROME, GEORGIA WATER AND SEWER DIVISION STANDARD WATER LINE SPECIFICATIONS

This page intentionally left blank.

STANDARD WATER LINE SPECIFICATIONS

CITY OF ROME, GEORGIA

EFFECTIVE DATE JUNE 23, 2009

TABLE OF CONTENTS

1.01 – Purpose 1-1
1.02 – General 1-1
1.03 – Construction Drawings 1-1
1.04 – Materials 1-2
1.05 – Handling Materials.....1-8
1.06 – Construction along Highways, Streets, and Roadways 1-8
1.07 – Clearing 1-9
1.08 – Excavation 1-9
1.09 – Existing Underground Utilities and Obstructions.....1-10
1.10 – Laying and Jointing Pipe and Fittings 1-11
1.11 – Connections to Existing Pipe Lines 1-12
1.12 – Thrust Restraint.....1-12
1.13 – Fire Hydrant Installation 1-12
1.14 – Service Line Installation 1-13
1.15 – Backfilling 1-13
1.16 – Removing and Replacing Pavement 1-14
1.17 – Boring and Tunneling 1-16
1.18 – Stream and Ditch Crossing 1-20
1.19 – Testing, Inspection, & Rejection of Work 1-21
1.20 – Disinfecting Pipe Lines.....1-22
1.21 – Erosion and Sedimentation Control 1-23
1.22 – Grassing 1-23
1.23 – Protection and Restoration of Work Area.....1-24

APPENDIX A - STANDARD DRAWINGS

Typical Fire Hydrant Assembly Detail A-1
Rome Standard Hose Coupling Detail A-2
Typical Gate Valve & Box Detail.....A-3
Typical Blocking Detail A-4
Repair of Roadway Cut Detail A-5
Typical Water Service Connection Detail (Single Family) A-6
Water Valve Witness Post Detail.....A-7
Valve Location Sketch & Sample Drawing.....A-8
Typical Concrete Valve Marker.....A-9
Typical Water Service Connection Detail (Duplex Lot) A-10

Automatic Flush Installation Standard Detail.....A-11
Fire Line Service & Domestic Meter Vault Detail A-12

APPENDIX B - GRASSING SPECIFICATIONS

WATER LINE SPECIFICATIONS

1.01 - PURPOSE: These Specifications describe products to be incorporated into the water lines and requirements for the installation and use of these items. The Contractor/Developer shall furnish all products and perform all labor necessary to fulfill the requirements of these Specifications. The word "Division" used herein shall mean the Water and Sewer Division of the City of Rome, Georgia.

1.02 - GENERAL: All contractors installing water lines to be accepted onto maintenance by the City of Rome shall possess a valid utility contractors license issued by the State of Georgia and shall provide proof thereof to the City of Rome prior to the commencement of any work. Supply all products and perform all work in accordance with applicable American Society for Testing and Material (ASTM), American Water Works Association (AWWA), American National Standards Institute (ANSI), or other recognized standards. Latest revisions of all standards are applicable. If requested by the Division, submit evidence that manufacturers have consistently produced products of satisfactory quality and performance for a period of at least two years. By reference, the "Rules for Safe Drinking Water", latest revision, as established by the Georgia Department of Natural Resources, Environmental Protection Division shall also apply as though incorporated into these Specifications. All land disturbing activities shall be in full compliance with the Manual for Erosion and Sediment Control in Georgia, latest revision, and Best Management Practices.

1.03 - CONSTRUCTION DRAWINGS: The term construction drawings shall mean drawings, prints, descriptive literature, test reports, samples, calculations, schedules, material lists, and information and items of similar meaning.

(a) Submittals Required: The Contractor/Developer shall furnish to the Division for review in accordance with the procedure outlined below, drawings and descriptive literature for all manufactured or fabricated products. Additional information such as special drawings, schedules, calculations and curves, shall be provided as specifically requested by the Division.

(b) Contractor/Developer's Review: The Contractor/Developer shall review and check drawings and submittals. He shall indicate his approval by initials and date. The Contractor/Developer shall furnish the Division with a minimum of three copies of all submittals. A transmittal form shall accompany each submittal or group of submittals.

(c) Division's Review: All submittals will be reviewed, stamped, and dated by the Division before they are returned to the Contractor/Developer.

Acceptable submittals will be approved in writing with one copy returned to the Contractor/Developer and the remaining copies retained by the Division.

Submittals requiring minor corrections before being acceptable will be so noted. Drawings must be resubmitted for review and approval prior to installation or use of products.

(d) Drawings For Construction: Drawings or other submittals not bearing the Division's approval notation shall not be issued to subcontractors or utilized for construction purposes. The Contractor/Developer shall maintain at the job site a complete set of construction drawings bearing the Division's approval.

(e) Valve Location Sketches: The location of all valves installed shall be accurately referenced to at least two permanent landmarks which will not be removed or disturbed during construction. The Contractor\Developer shall provide valve location sketches similar to the example shown in Appendix 'A' of these specifications to the Division.

(f) As-Constructed Survey: The Contractor/Developer shall provide the City of Rome with and as-constructed survey of all water system improvements. This survey shall show the horizontal location of all valves, meters, fire hydrants, water mains and conduits.

1.04 - MATERIALS: Furnish all pipe, fittings, valves, tapping sleeves and valves, hydrants, and all other materials required for completion of the work. Pipes and fittings must not contain more than 8.0% lead, and solders and flux must not contain more than 0.2% lead. Furnish materials in accordance with the following:

(a) Ductile Iron Pipe (DIP): Ductile iron pipe shall conform to AWWA C151 and shall be a minimum of Class 50. All ductile iron pipe 20-inch diameter and smaller shall have a rated working pressure of 350 psi. Pipes larger than 20-inch diameter shall have a rated working pressure of 300 psi. Sizes will be as shown on the Drawings with the minimum allowable size being 8 inches. Pipe and fittings shall be cement lined in accordance with AWWA C104. Fittings shall conform to AWWA C110 with rated working pressure of 250 psi. Pipe shall be furnished with a bituminous outside coating.

Joints shall be push-on type for pipe and standard mechanical or flanged joints for fittings. Push-on and mechanical joints shall conform to AWWA C111. Restrained joint pipe (RJP) shall be either the bolted joint type or modified push-on type with joint restraint using ductile iron components. Restrained joint pipe on piers shall have bolted joints and shall be specifically designed for clear spans of at least 20 feet. Restrained joint pipe where required shall be American Zinc Coated.

Provide the appropriate gaskets for mechanical or flange joints. Gaskets for flange joints shall be made of 1/8-inch thick cloth reinforced rubber; gaskets may be ring type or full-face type.

Provide the necessary bolts for mechanical or flange connections. Bolts for flange connections shall be stainless steel with American Regular unfinished square or hexagon heads. Nuts shall be stainless steel with American Standard Regular hexagonal dimensions, all as specified in ANSI B 17.2. All bolts and all nuts shall be threaded in accordance with ANSI B 1.1, Coarse Thread Series, Class 2A and 2B fit.

All pipes shall be furnished in lengths of at least 18 feet. Acceptance will be in the basis of the Division's inspection and the manufacturer's written certification that the pipe was manufactured and tested in accordance with the applicable standards.

All fittings shall be of cast or ductile iron meeting the requirements of AWWA C110 with rated working pressure of 250 psi. Fittings shall be cement lined in accordance with AWWA C104.

Fittings shall be seal coated with a fusion bonded epoxy in accordance with ANSI/AWWA C-116/A21.16. Tees at fire hydrants shall be approved anchor tees. (DOMESTIC FITTINGS ONLY)

(b) Polyvinyl Chloride Pipe (PVC): When approved for use by the Division, PVC pipe shall have belled ends for push-on type jointing with elastomeric gasket seals and shall conform to AWWA C900, for cast-iron pipe equivalent OD's. The pipe shall have a Dimension Ratio (SDR) of 18 and shall be capable of withstanding a working pressure of 250 psi.

Pipe shall be supplied in lengths of at least 20 feet.

All fittings shall be of cast or ductile iron meeting the requirements of AWWA C110 with rated working pressure of 250 psi. Fittings shall be cement lined in accordance with AWWA C104.

Fittings shall be seal coated with a fusion bonded epoxy in accordance with ANSI/AWWA C-116/A21.16. Tees at fire hydrants shall be approved anchor tees. (DOMESTIC FITTINGS ONLY)

A detectable wire trace or detection tape shall be installed over all PVC water mains. Wire trace shall be copper strand Type 12-19, MTW, THHN, or THWN. Detection tape shall be detectable Mylar encased aluminum foil marking tape and shall be installed 1' above the top of pipe. Tape will be blue in color, at least 2-inches wide, and shall bear the printed identification "Caution: Water Line Buried Below". Detection tape shall be equal to Blackburn Mfg. Co. detectable underground warning tape.

Acceptance will be on the basis of the Division's inspection and the manufacturer's written certification that the pipe was manufactured and tested in accordance with the applicable standards. All plastic water pipes and service lines must bear the National Sanitation Foundation (NSF) seal of approval for potable water use.

(c) Gate Valves (GV): Gate valves with diameters 4 inches and larger shall be resilient seat, wedge-type conforming to the requirements of AWWA C509, and with geared operators, where required. All valves shall have a minimum rated working pressure of 250 psi.

Valves shall have a smooth, full diameter waterway with no recesses to trap debris or obstruct flow.

Valve ends shall be mechanical joint type with set screw type retainer glands except where flanged ends are required.

Valves shall open left and shall have o-ring type stem seals. Valve shall be designed so that upper o-ring stem seals can be replaced while the valve is fully open and under pressure.

Buried valves shall be equipped with valve boxes as shown in Appendix A. Provide extension stem where required. Bolts for extension stems shall be all stainless steel.

Valves located outside of roadway right of way shall be marked with a witness post as shown in Appendix A.

Valves located within the right of way shall be marked with a concrete valve marker as shown in Appendix A.

Valves, including geared valves, shall be non-rising stem type.

Gate valves shall be manufactured by American Ductile Iron Pipe, Mueller, or Griffin.
(d) Butterfly Valves: All butterfly valves shall be tight-closing rubber seated type. Valves shall close tight at the rated pressures with flow in either direction. Valve discs shall rotate 90 degrees from the fully open to fully shut position and shall meet the requirements of AWWA C504.

Valve ends shall be mechanical joint type with set screw type retainer glands except where flanged ends are required.

Valve operators shall be designed to hold the valve in any intermediate position without creeping or fluttering.

Manual valve operators shall be of the worm gear or traveling nut type, and shall be fully enclosed. Units shall be fully gasketed and grease packed.

Buried valves shall be furnished with ground level valve position indicators.

Valves shall open left.

(e) Backflow Preventers: All backflow prevention shall be installed to be in full compliance with the City of Rome Cross Connection Protection Plan. This plan is available through the Division. All backflow preventers shall be installed as close as possible to the water supply. All development shall be classified as on of three risk groups. Section 3 of the Cross Connection Protection Plan provides examples and basic descriptions of each Risk Group. The classification of a development will relate to potential risks, dependent upon internal processes, rather than the general category of the business or industry. The Director of the City of Rome Water Department shall make this determination.

(1) Backflow preventers for those developments classified as Risk Group I shall be the reduced pressure type providing protection during the emergency conditions of either back-siphonage or backpressure or a combination of both. Backflow preventers shall be certified by a nationally recognized testing laboratory as conforming to current requirements of ASSE 1013, AWWA C506, or USC-FCCC. The installation shall meet all applicable State and local codes.

Sizes 3/4-inch through 2-inch shall have bronze bodies with threaded connections and bronze union on either side of the device.

Sizes 2-1/2 inch and larger shall be bronze or iron bodied with corrosion resisting moving parts and trim and flange connections.

The device shall be equipped with three leak-proof test cocks. A fixed air gap, or funnel, shall be installed at the relief port. A drain line shall be piped from the discharge side of the air gap and shall be supported independently from the device.

An auxiliary check valve and strainer shall be installed upstream of the device. Gate valves shall be installed upstream and downstream of the device.

Backflow preventers shall be manufactured by Watts (no. 909 Series), Hersey, or Conbraco.

All reduced pressure zone backflow preventers shall be installed above grade.

(2) Backflow preventers for those developments classified in Risk Groups II and III shall be of the dual check valve type providing protection during the emergency conditions of either back-siphonage or backpressure or a combination of both. Backflow preventers shall be certified by a nationally recognized testing laboratory as conforming to current requirements of ASSE 1024 and CSA B64.6. The installation shall meet all applicable State and local codes.

The device shall be equipped with three test ports that allow testing while the valve is in line.

Backflow preventers shall be manufactured by Conbraco (Series 40-300), Watts, Hersey, or equal.

(3) Backflow preventers used on fire protection systems shall of the double check detector type. Fire protection system backflow preventers shall be installed in accordance with the American Water Works Association (AWWA) Guidelines on Fire Prevention Installations.

Backflow preventers shall be manufactured by Watts (Series 770DCDA), Hersey, or Conbraco.

(f) Corporation Stops: Corporation stops shall be ground key type; shall be made of bronze conforming to ASTM B 61 or B 62; and shall be suitable for the working pressure of the system. Ends shall be suitable for solder-joint, flanged lead joint or flared tube compression type joint. Threaded ends for inlet and outlet of corporation stops shall conform to AWWA C 800; coupling not for connection to flared copper tubing shall conform to ANSI b16.26.

(g) Valve Boxes (VB): All gate valves shall be equipped with valve boxes. Valve boxes shall be heavy roadway type. The valve boxes shall be cast iron two-piece slip or screw type with drop covers. The valve boxes shall be adjustable to 6 inches up or down from the nominal required cover over the pipe. Typical valve box details are included in the Appendix.

(h) Valve/Backflow Preventer Pits: All valve assemblies and backflow preventers installed underground shall be installed in a vault. The valve pit shall be sized and shall include adequate means for replacement or maintenance to components. Designs for all valve pits shall be approved by the Division.

(i) Meter Boxes: All new service meters, curb stops, and backflow preventers shall be installed inside a meter box. Meter boxes shall be sized according to the size of the components used. All meter boxes for 2" diameter and larger meters must be approved by the Division.

Meter boxes installed outside of paved areas and driveways shall be constructed of High Density Polyethylene (HDPE) and shall have a cast iron lid. These boxes shall be manufactured by D.F.W., Carson-Brooks, or equal.

All meter boxes installed in paved areas or driveways shall be constructed of all cast iron. These boxes shall be manufactured by Opelika, Higgins or equal.

(j) Tapping Sleeves and Valves (TS&V): Tapping sleeves when approved for use by the Division shall be of the splitsleeves, mechanical joint type. Valves shall be gate valves furnished in accordance with the specifications shown above, with flanged connection to the tapping sleeve and mechanical joint connection to the branch pipe. The branch pipe shall have set-screw retainer glands. The necessary bolts, glands, and gaskets shall be furnished.

(k) Repair Clamps: All repair clamps and associated nuts and bolts shall be all stainless steel. No repair clamps are permitted on new lines.

(l) Fire Hydrants (FH): All fire hydrants shall conform to the requirements of AWWA C502 for 250-psi working pressure. Hydrants shall be the compression type, closing with line pressure. Hydrants serving commercial or industrial areas shall have a valve opening not less than 4-1/2 inches and shall open left. Hydrants serving rural and residential areas shall have a valve opening not less than 4-1/2 inches and shall open left.

In the event of a traffic accident, the hydrant barrel shall break away from the standpipe at a point above grade and in a manner which will prevent damage to the barrel and stem, preclude opening of the valve, and permit rapid and inexpensive restoration without digging or cutting off the water.

The means for attaching the barrel to the standpipe shall permit facing the hydrant a minimum of eight different directions.

Hydrants shall be fully bronze mounted with all working parts of bronze. Valve seat ring shall be bronze and shall screw into a bronze retainer.

All working parts, including the seat ring shall be removable through the top without disturbing the barrel of the hydrant.

The operating nut shall be 5-sided with a 7/8-inch face. The operating threads shall be totally enclosed in an operating chamber separated from the hydrant barrel by a rubber o-ring stem seal and lubricated by a grease or oil reservoir. A stop nut shall be positioned in the top operating mechanism so that the valve cannot contact the bottom of the shoe when fully open.

Hydrant shall be a non-freezing design and provided with a simple, positive, and automatic drain, which shall be fully closed whenever the main valve is opened.

Hose and pumper connections shall be breech-locked, pinned, and then caulked with lead; or threaded and pinned, to seal them permanently into the hydrant barrel. Each hydrant shall have two 2-1/2 inch hose connections with Rome Standard thread connections, as shown in the Appendix, and one 4-inch pumper connection with National Standard thread connection. Provide each connection with a cap and chain.

Hydrants shall be furnished with a mechanical joint shoe connection to the spigot of the 6-inch hydrant lead. Minimum depth of bury shall be 3.5 feet with the "bury line" at ground level. Provide extension section where necessary for vertical installation and in accordance with manufacturer's recommendations.

All outside surfaces of the barrel above grade and the bonnet shall be painted OSHA Safety Yellow (7-757) as manufactured by Gillman Industries.

Hydrants shall be furnished with flow charts showing flow in gallons per minute versus friction loss.

Hydrants shall be Mueller Centurion.

1.05 - HANDLING MATERIALS:

(a) Unloading: Furnish equipment and facilities for unloading, handling, distributing and storing pipe, fittings, valves, and accessories. Make equipment available at all times for use in unloading. Do not drop or dump materials. Any materials dropped or dumped will be subject to rejection without additional justification.

(b) Handling: Handle pipe, fittings, valves and accessories carefully to prevent shock or damage. Handle pipe by rolling on skids, forklift, or front loader. Do not use material damaged in handling.

(c) Distribution: Distribute and place pipe and materials to not interfere with traffic. Do not string pipe more than 1,000 feet beyond the area where pipe is being laid. Do not obstruct drainage ditches.

(d) Storage: Store all pipe which cannot be distributed along the route. Make arrangements for the use of suitable storage areas.

1.06 - CONSTRUCTION ALONG HIGHWAYS, STREETS, AND ROADWAYS: Install pipe lines and accessories along highways, streets and roadways in accordance with the applicable regulations and permits of the City of Rome, Floyd County and/or the Department of Transportation with reference to construction operations, safety, traffic control, road maintenance and repair. All signage, barricades, and other traffic controls shall be installed in accordance with the Manual on Uniform Traffic Control Devices (MUTCD) latest revision.

(a) Protection of Traffic: Provide and maintain suitable signs, barricades and lights for protection of traffic. Replace all highway signs removed for construction as soon as possible. Do not close or block any highway, street, or roadway without first obtaining permission from the proper authorities.

Provide flagmen to direct and expedite the flow of traffic. All flagmen must be certified by the Georgia Department of Transportation.

(b) Construction Operations: Perform all work along highways, streets and roadways to least interfere with traffic.

(1) Stripping: Where the pipe line is laid along road shoulders, strip and stockpile all sod, topsoil and other material suitable for shoulder restoration.

(2) Trenching, Laying and Backfilling: Do not open the trench any further ahead of pipe laying operations than is necessary. Backfill and remove excess material immediately behind laying operations. Complete excavation and backfill for any portion of the trench in the same day.

(3) Shaping: Reshape damaged slopes, side ditches, and ditch lines immediately after completing backfilling operation. Replace topsoil, sod and any other materials removed from shoulders.

(c) Excavated Materials: Do not place excavated material along highways, streets and roadways in a manner, which obstructs traffic. Sweep all scattered excavated material off the pavement.

(d) Drainage Structures: Keep all side ditches, culverts, cross drains, and other drainage structures clear of excavated material and free to drain at all times.

(e) Maintaining Highways, Streets, Roadways and Driveways: Maintain streets, highways, and roadways in suitable condition for movement of traffic until completion and final acceptance of the work. Use steel running plate to maintain traffic until pavement replacement is completed.

Repair all driveways that are cut or damaged immediately. Maintain them in a suitable condition for use until completion and final acceptance of the work.

1.07 - CLEARING: Where limits of clearing are shown on the Drawings, all trees, growth, debris, stumps and other objectionable matter shall be removed before trenching. Clearing of the construction easement is permitted with special care taken to adhere to the requirements of Sections 21, 22 and 23 of these specifications.

1.08 - EXCAVATION: Excavate all materials encountered, including rock, and dispose of excess excavated material not required for backfilling. Perform all excavation in accordance with applicable local, state, and federal regulations, including those authorized by the Occupational Safety and Health Act (OSHA), as amended.

(a) Depth of Trenches: Excavate trenches to provide a minimum cover of 42-inches. Within the right-of-way of highways, streets, or roadways, excavate to place the top of the pipe a minimum of four feet below the nearest pavement edge.

(b) Width of Trenches: Excavate trenches wide enough to allow proper installation of pipe, fittings, and other materials, and not less than 12 inches clear of the outside barrel of the pipe on any side at any point.

(c) Bell Holes: At each joint, excavate bell holes of ample depth and width to permit the joint to be made properly and to relieve pipe bell of any load.

(d) Earth Excavation: Excavate and prepare the trench bottom to support the pipe uniformly throughout its length.

For ductile iron pipe, the trench shall meet all requirements of Standard Laying Condition Type 2 in accordance with AWWA C151.

If the trench is excavated to excessive width or depth, provide crushed stone meeting the requirements of Georgia DOT Specification 800.01 for No. 57 stone to achieve Standard Laying Condition Type 4 in accordance with AWWA C151.

(e) Rock Excavation:

(1) Definition of Rock: Any material which cannot be excavated with a backhoe and occupying an original volume of at least one-half cubic yard.

(2) Excavation: Where rock is encountered, excavate to the minimum depth and width, which will provide 6 inches clearance beyond the outside diameter of the pipe bell.

(3) Blasting: Blasting operations shall be conducted in strict accordance with all applicable ordinances and regulations. All exposed structures shall be carefully protected from the effects of blast and all blasts shall be covered with heavy timbers or other suitable material. The Contractor shall limit amounts of explosives and timing of blasts to minimize noise and concussion and to prevent damage to existing structures, pavements and utilities. The blasting shall be done only by experienced men. Damages shall be promptly repaired by the Contractor

at his own expense. No blasting will be permitted adjacent to existing buildings and structures. Rock at those locations shall be removed with jack hammers and bull-points. If rock is encountered that requires removal by blasting the Contractor shall retain and employ a qualified blasting consulting Engineer, approved by the owner, to supervise the work. The Blasting Engineer's duties shall be to advise the blaster of hole spacing and loading and to make seismic and concussion measurements. The Contractor shall cooperate with the Blasting Engineer by uncovering and exposing pipe and structures for instrument mounting. The contractor shall also advise the Owner when each shot is ready and how it is loaded. No loaded holes shall be left unattended at any time for any reason. All blasting shall be done during daylight hours.

(1) Blasting and Ordinances: All blasting operations shall be conducted in strict accordance with existing ordinances and regulations, and shall be done only with the Blasting ENGINEER'S APPROVAL AND UNDER ENGINEER'S SUPERVISION.

(2) Protection of Surroundings: All exposed structures shall be protected from the effects of blasts and all blasts shall be covered with blasting mats, dirt, heavy timbers, or other suitable material. They shall be restricted to the extent that no appreciable shock will be transmitted to existing structures, pipe lines, sewers, or 312333-5 Trench Excavation and Backfill other public or private facilities. The blasting shall be done by experienced personnel. Any damage done shall be promptly repaired by the Contractor at the Contractor's expense.

(3) Storage of Blasting Supplies: All blasting supplies shall be stored in a magazine which complies with all Local, State, and Federal Laws, and a watchman shall be stationed at all times at the place of storage. In no case shall caps or other exploders be kept at the place where dynamite or other explosives are kept.

(4) Delay of Shots: All shots shall be delayed so as to minimize ground vibrations with a maximum peak particle velocity, as measured to the nearest structure (embankment, pipes, etc.) not to exceed 2 inches per second. The overpressure noise or concussion shall be minimized and stemming and matting shall be used to prevent over pressure in excess of 120 db. Precautions shall be taken to minimize flying rock and sufficient matting used to prevent rocks from striking any person or structure.

(5) Vibration Recording instruments: Vibration recording instruments shall be used on all shots. These shall be of type which records on direct reading tape the three (3) components of velocity. The analysis of these recordings is to be signed by a Registered Professional Engineer in Georgia. Blasting is not to be conducted which will produce a Scaled Distance less than previously recorded for at least three (3) different shots deemed to be safe. The scaled distance is to be determined by the distance from the shot to the nearest structure subject to potential damage from ground vibration.

(6) Overpressure: (Concussion) Overpressure is to be recorded on direct recording tape, preferable on the same recording as the vibration. The instrument used for measuring concussion shall be the type specifically designed for impact-type overpressure from blasting.

(7) Record of Shots: The blaster is to maintain an accurate log of each shot, listing as a minimum the following: date, time, weather conditions including temperature

and humidity, station number, manufacture and type of explosive, method of detonation, total weight of explosive per shot, number of delays, number of holes, hole depth, maximum weight of explosives per delay, amount of explosives per hole number, amount of stemming, type and amount of blast matting, and a sketch of the hole pattern with hole number for each shot.

(4) Removal of Rock: Do not use excavated rock as backfill material. Dispose of rock, which is surplus or not suitable for use as rip rap.

(f) Creek and Channel Crossings: When crossing creeks, channels or other surface waters, excavate the trench to provide a minimum cover of two feet. Pipe shall be ductile iron restrained joint pipe and shall be encased in concrete. River crossings must be approved by the City of Rome in addition to any other federal, state, and local requirements.

1.09 - EXISTING UNDERGROUND UTILITIES AND OBSTRUCTIONS: It is the responsibility of the Contractor/Developer to locate all existing utilities along the path of his construction and to properly notify the Utilities Protection Center. Drawings shall indicate underground utilities or obstructions that are known to exist. Where these or unforeseen underground utilities are encountered, the location and alignment of the water main may be changed, upon written approval of the Division, to avoid interference.

A horizontal separation of at least 10 feet must be maintained between the water main and existing or proposed sewers. When water mains cross sewers, a minimum vertical separation of 18 inches must be provided between the two (2) pipes (measured edge to edge). At crossings, one full length of water pipe must be located so that both joints are as far from the sewer as possible.

1.10 - LAYING AND JOINTING PIPE AND FITTINGS: Lay all pipe and fittings to accurately conform to the lines and grades approved by the Division as follows:

(a) Handling: Use suitable tools and equipment to handle and lay pipe. Prevent damage to the pipe and the cement lining. Examine all pipe carefully for cracks and other defects as it is laid. Do not lay pipe or other materials, which are known to be defective.

Lower pipe, fittings, valves, and accessories into the trench by suitable means. Do not drop or dump pipe or accessories into the trench.

Clean pipe and fittings thoroughly before laying. Keep the pipe line clean until final acceptance.

If any pipe or other material is discovered to be defective or damaged after being laid, remove and replace it.

(b) Alignment and Gradient: Lay pipe straight in alignment and gradient or follow true curves as nearly as practicable. Do not deflect any joint more than 2/3 the maximum deflection recommended by the manufacturer.

Maintain a transit and accessories on the job to lay out angles and ensure that deflection allowances are not exceeded.

(c) Expediting of Work: Excavate, lay the pipe and backfill as closely together as possible. Do not leave unjointed pipe in the trench overnight. Backfill and compact the trench as soon as possible after laying and jointing is completed. Plug the exposed end of the installed pipe each day at the close of work and at all other times when work is not in progress. If necessary to backfill over the end of an uncompleted pipe, close the end with a mechanical joint plug.

(d) Laying Pipe in Trenches: Lay the pipe with solid bearing throughout its length.

(1) Earth Trenches: Grade the bottom of the trench to a true line. Lay the pipe in clean bedding material, free of rock, organics, and other unsuitable materials.

(2) Rock Trenches: Bed the pipe in at least six inches of clay or granular bedding material. Backfill with the same material to at least two feet above the pipe.

(3) Wet Trenches: Do not lay pipe in water. Provide dewatering equipment to maintain a ground water level below the bottom of the pipe while the pipe is being laid.

(e) Push-On Type Joints: Push-on type joints shall be made in accordance with the manufacturer's recommendations.

(f) Mechanical Joints: Make mechanical joints in accordance with the manufacturer's recommendations.

(g) Flange Joints: Make flange joints in accordance with the manufacturer's recommendations.

(h) Cutting: Cut ductile iron pipe using an abrasive wheel saw. Cut PVC pipe using a suitable saw; remove all burrs and smooth the end before jointing.

1.11 - CONNECTIONS TO EXISTING PIPE LINES: Before laying pipe, the Contractor/Developer shall locate the points of connection to existing pipe lines and uncover as necessary for the Division to confirm the nature of the connection to be made. The Division shall furnish materials and make the connection to all existing pipe lines unless otherwise directed. The Contractor/Developer will be charged with a connection fee to cover the expense of the Division.

1.12 - THRUST RESTRAINT: Provide restraint at all points where hydraulic thrust may develop.

(a) Retainer Glands: Install retainer glands on fire hydrants and all associated fittings, valves, and related piping. Retainer glands shall be equal to ACIPCO A 90857.

(b) Concrete Blocking: Provide concrete blocking for all other bends, tees, valves, and other points where thrust may develop.

Concrete shall have a compressive strength of not less than 3000 psi, with not less than 5.5 bags of cement per cubic yard and a slump between 3 and 5 inches. For job mixed concrete, submit the concrete mix design for approval by the Division. Ready-mixed concrete shall be mixed and transported in accordance with ASTM C 94. Reinforcing steel shall conform to the requirements of ASTM A 615, grade 40.

Form and pour concrete blocking at fittings as shown on the Typical Blocking Detail in Appendix A and as directed by the Division. Pour blocking against undisturbed earth. Increase dimensions when required by over excavation.

1.13 – FIRE HYDRANT INSTALLATION: Fire hydrants shall be installed at the locations indicated on the approved Plans and in accordance with the standard detail provided in Appendix 'A' of these Specifications.

All connections shall be fully restrained using rod restraints or mechanical joint glands in all couplings and fittings between the main to the hydrant.

Extension sections shall be used to adjust the elevation of the hydrant barrel so that the breakaway joint is at finish grade.

1.14 – SERVICE LINE INSTALLATION: Service lines shall be installed in accordance with the standard detail provided in Appendix 'A' of these specifications. All service line components shall be brass or copper.

All service lines shall be buried a minimum of 18" below finish grade. Grade of service line shall be adjusted at the meter box to insure that service line passes through notches in meter box. Service line installation shall extend a minimum of 6" beyond the meter box.

1.15 - BACKFILLING: Backfill and compact to prevent settlement and displacement of the pipe.

(a) Material: Trenches may be backfilled with suitable soil material, granular material or crushed stone. Do not use rock excavated from trenches in the backfill. If necessary, furnish suitable material to backfill the trench.

(1) Suitable soil materials shall be those defined as suitable by the Unified Soil Classification System (USCS) in ASTM D 2487. This shall include materials outline in Soil Class II, III, and IV and in general include inorganic sands, silts and clays.

(2) Unsuitable soil material shall be those defined as unsuitable by the Unified Soil Classification System (USCS) in ASTM D 2487. This shall include materials outlined in Soil Class V and in general include organic silts and clays, peat, muck or other highly organic soils.

(3) Granular Material, when used for bedding or backfilling of trenches, shall consist of a granular soil, sand, crushed stone, or mixture of these, all of which pass a 3/4-inch sieve, 80% of which pass a 3/8-inch sieve, and not more than 12% pass a No. 200 sieve. Material shall be free of organic matter and debris.

(4) Crushed Stone, when used for bedding or backfill of trenches, shall consist of sound, durable “crusher-run” rock, all of which passes a 2-inch sieve. Material shall be free of organic matter and debris.

(b) Backfill: Place backfill material in the bottom of the trench and up to two feet above the pipe in 6-inch layers. Compact with two hand operated air hammers with tamping feet, one on each side of the pipe, operated simultaneously.

Backfill above shall be compacted as follows:

(1) In 6-inch layers, if using light power tamping equipment, such as a "Wacker,"

(2) In two foot layers, if using heavy tamping equipment, such as vibratory "Ramax",

(c) Backfill Under Roads: Backfill underlying pavement and backfill under dirt and gravel roads shall be compacted to 95% of the maximum dry density as determined by the Standard Proctor Compaction Test (ASTM D 698).

(d) Settlement: If trenches settle, refill and grade the surface to conform to adjacent surfaces.

(e) Wire Trace: Bury detectable wire trace immediately above PVC pipe. Secure wire to pipe at fittings or at any change in direction or deflection. Take care not to damage wire insulation.

1.16 - REMOVING AND REPLACING PAVEMENT:

(a) Removing Pavement: Remove existing pavement as necessary for installing the pipe line and appurtenances.

(1) Marking: Before removing any pavement, mark the pavement neatly paralleling pipe lines and existing street lines. Space the marks the width of the trench.

(2) Breaking: Break asphalt pavement along the marks using jack hammers or other suitable tools. Break concrete pavement along the marks by use of jackhammers or by scoring with a rotary saw and breaking below the score by the use of jackhammers or other suitable tools.

(3) Machine Pulling: Do not pull pavement with machines until completely broken and separated from pavement to remain.

(4) Damage to Adjacent Pavement: Do not disturb or damage the adjacent pavement. If the adjacent pavement is disturbed or damaged, remove and replace the damaged pavement.

(5) Sidewalk: Remove and replace sidewalks for their full width. Replace sidewalk to the nearest construction joint beyond damaged areas.

(6) Curbs: Remove and replace or tunnel under any curb encountered.

(b) Replacing Pavement: Upon completion of backfilling and consolidation of the backfill, arrange to have the compaction tested by an independent testing laboratory approved by the Division. After compaction testing has been satisfactorily completed, replace all pavements, sidewalks and curbs removed.

(1) Materials: Place materials for pavement replacement to dimensions shown on the Drawings. Typical replacement details are included in Appendix A.

(aa) Graded Aggregate Sub-Base: Furnish graded aggregate sub-base in two sizes of such gradation that when combined in approximately equal quantities, the resulting mixture is well graded from coarse to fine, meeting the gradation requirements of Section 816 of the Georgia Department of Transportation Standard Specifications.

(bb) Black Base: The base for all paved roadways shall conform to the requirements of the Georgia Department of Transportation Specifications for the Black Base (Hot Mix). Apply and compact the base in two courses by asphalt spreader equipment of design and operation approved by the Division. After compaction, the black base shall be smooth and true to established profiles and sections.

(cc) Surface Course: The surface course for all pavement, including paint or tack coat when required by the Division, shall conform to the requirements of the Georgia Department of Transportation Specifications for Asphaltic Concrete, Section 400, Type "E" (12.5 mm). Apply and compact the surface course in a manner approved by the Division. Immediately correct any high, low or defective areas by cutting out the course, replacing with fresh hot mix, and immediately compacting to conform and thoroughly bond to the surrounding area.

(dd) Concrete: Provide concrete and reinforcing for concrete pavement in accordance with the requirements of the Georgia Department of Transportation Specifications for Portland Concrete Pavement, Section 430.

(2) Supervision and Approval: Pavement restoration shall meet the requirements of the regulatory agency responsible for the pavement. Obtain agency approval of pavement restorations before requesting final inspection.

Obtain the Division's approval for restoration of pavement such as private roads and drives.

Complete pavement restoration as soon as possible after backfilling

(3) Replacement: Prior to replacing pavement, make a final cut in concrete pavement nine inches back from the edge of damaged pavement. Make the cut

using a rotary saw. Remove asphalt pavement nine inches back form the edge of damaged pavement using jack hammers or other suitable tools.

Replace all street and roadway pavement as shown on the Drawings. Replace driveways, sidewalks, and curbs with the same material and to the same dimensions as existing.

(4) Failure of Pavement: Should any pavement restoration or repairs fail or settle within 12 months of completion, promptly restore or repair defects.

1.17 - BORING AND TUNNELING: Furnish and install pipe casing or tunnel and install the pipe line therein in accordance with the Drawings and the following specifications:

(a) General: Where groundwater is encountered, operate well points of drainage systems in the vicinity of the casing or tunnel construction to prevent the accumulation of flood water in the casing or tunnel and to maintain the ground water table below the casing or tunnel invert.

(b) Pipe Casing: Furnish all material and equipment and perform all labor required to install steel pipe casing at locations indicated on the Drawings and as specified.

(1) Boring: The steel casing pipe shall be Schedule 30 steel pipe manufactured from steel conforming to ASTM A 139, Grade B. Size and thickness shall be as follows:

UNDER RAILROADS

Pipe Diameter Inches	Casing Diameter Inches	Wall Thickness inches
6	14	0.250
8	18	0.250
10	20	0.281
12	22	0.312
14	24	0.344
16	30	0.406
18	30	0.406
20	32	0.469
24	36	0.469
30	42	0.500

UNDER HIGHWAYS

Pipe Diameter Inches	Casing Diameter Inches	Wall Thickness inches
6	12	0.250
8	16	0.250
10	16	0.250
12	18	0.250
14	22	0.250
16	24	0.250
18	30	0.312
20	30	0.312
24	36	0.375
30	42	0.375

The outside of the casing pipe shall be primed and coated with a hot coal tar enamel a minimum of 3/32-inches thick. Only new primed and coated pipe shall be used.

Install the steel pipe casing by the dry boring method. Bore the hole and install the casing through the soil simultaneously by a cutting head on a continuous auger mounted inside the casing pipe. Fully weld lengths of casing pipe to the preceding section in accordance with AWS recommended procedures. After the boring and installation of the casing is complete, install a cleaning plug on the rig and clean the casing.

(c) Tunnel: Install the tunnel liner in strict accordance with requirements of the Division, Department of Transportation (DOT), Railroad Company, or other governing agencies. Provide any special insurance coverage required by the governing body. A minimum of five years of experience in construction of tunnels of the general size is required of the tunnel installer. Submit evidence of experience with shop drawings for review by the Division.

Excavate tunnel by full face, heading and bench, or multiple drift procedures. Any procedure utilizing a full or partial shield, a tunneling machine or other equipment which exerts a force on the liner plates for the purpose of propelling, steering or stabilizing the equipment will not be allowed.

Prior to any work involving explosives, make application to the Division, DOT, or other governing agencies, for a special permit which will be in addition to any tunneling permit not involving explosives.

Comply with all requirements and conditions of all permits including required submittals.

Schedule the work so as not to interfere with or in any way endanger traffic flow on the highway or railway. Provide all required safety measures as specified in the Georgia Manual on Uniform Traffic Control Devices.

(1) Materials: Tunnel liner plates shall be manufactured from steel conforming to ASTM A 569 with the following mechanical properties before cold forming:

Minimum Tensile Strength = 42,000 psi
Minimum Yield Strength = 28,000 psi
Elongation, 2 inches = 30 %

Liner plates shall be 10 gauge, with the neutral axis diameter shown on the Drawings for each crossing. All plates shall be formed to provide circumferential flanged joints. Longitudinal joints may be flanged or offset lap seam type. All plates shall be punched for bolting on both longitudinal and circumferential seams or joints. Bolt spacing in circumferential flanges shall be in accordance with the manufacturer's standard spacing and shall be a multiple of the plate length so that plates having the same curvature shall be interchangeable and will permit staggering of the longitudinal seams. Bolt spacing at flanged longitudinal seams shall be in accordance with the manufacturer's standard but not less than that required to meet the longitudinal seam strength requirements of Section 13 of AASHO Standard Specifications for Highway Bridges.

All liner plates in one tunnel shall be the same type.

Liner plates shall be hot-dip galvanized in accordance with ASTM A 123 and bituminous coated.

Bolts shall conform to ASTM A 307 Grade A, and shall be hot-dip galvanized in accordance with ASTM A 153.

Grout nipples shall be 2-inch minimum diameter tapped couplings welded into place over holes cut in the liner plate.

Grout shall consist of 1 part Portland cement, 2 parts masonry lime, 4 parts mortar sand, 2% of an approved admixture, i.e. Bentonite, Septamine Stearex, or Hydrocide Liquid, and where required, a retardant. The quantity of mixing water used shall be that which will produce a workable mixture of grout capable of being pumped into the voids created by the tunneling.

Brick shall be whole and hardburned, conforming to ASTM C32 Grade MS. Mortar shall be made of one part Portland cement and two parts clean sharp sand. Cement shall be Type 1 and shall conform to ASTM C 150. Sand shall meet ASTM C 53.

(2) Construction of Tunnel: Construct tunnel so that no settlement of the overpassing roadway or railway section will occur. In order to prevent such settlement, the use of poling plates, brest boards, shields, and soil solidification or a combination of these methods may be necessary.

Install steel liner plates as soon as possible, but no more than 5 feet of tunnel shall remain unlined while tunneling operations are in progress. Not more than 1 foot of tunnel shall be left unlined at the end of the day's operation.

Liner plates shall be installed in accordance with the manufacturer's recommendations and shall be self-supporting.

The tunnel excavation shall have a diameter essentially the same as the outside diameter of the liner plates.

Locate liner plates with grout couplings at the top of the tunnel at intervals not to exceed 10 feet.

Install additional plates with grout couplings on each side of the tunnel between the top couplings.

Pressure grout all voids in the area outside the plates every 10 feet and at the end of the work shift. Pressure grout more frequently if soil conditions dictate. Before grouting any segment of the tunnel liner, seal that segment sufficiently between the liner plates and the surrounding soil to retain the grouting pressure. Locate seals at the entrance of the tunnel, between grout coupling, and within one foot of the end of the tunnel at the end of the work shift.

Provide pumping equipment for grouting operations. Pump horsepower and the resulting pressure in the grouting line shall be sufficient to completely fill the voids without buckling or shifting the liner plates or damaging the roadway.

Repair damaged spelter coating in accordance with DOT specifications Section 645. Any plates having damaged spelter or bituminous coatings, which, in the opinion of the Division cannot be satisfactorily repaired, shall be replaced.

(d) Installation of Pipe: After installation of the casing is complete, install the pipe line by a method that has received prior approval of the Division.

Close the ends of the casing with 4 inch brick walls, plastered with Portland Cement mortar and waterproofed with asphaltic roofing cement.

Leave a 4 inch x 8 inch opening at the bottom of the lowest closure for drainage.

(e) Safety:

(1) Boring: Provide all necessary bracing, bulkheads, and shields to ensure complete safety to all traffic at all times during the work. Perform the work in such a manner as to not permanently damage the roadbed or interfere with normal traffic over it. If in the opinion of the Division the installation is being conducted in an unsafe manner, the Contractor/Developer will be required to stop work and bulkhead the

heading until suitable agreements are reached between the Contractor/Developer and the Division.

(2) Tunneling: Begin the tunneling operation in a pit, sheeted and shored as necessary and begin at and proceed from one end. Observe all applicable requirements of DOT, Railroad, or other regulatory agencies. Conduct the operations in such a manner that all work will be performed below the level of the roadbed. Coordinate and schedule all of the work with the Division and other permitting agencies.

Complete all tunneling work at one particular location before work is started at another location.

A temporary bulkhead against the face of the excavation shall be provided and well braced during each cessation of work while the heading is within 20 feet of railroad tracks or highway pavement.

If, in the opinion of the Division, the tunnel installation work is being conducted in a manner detrimental to the overpassing roadway or to the safety of the traveling public, all operations of tunneling shall cease until the necessary corrections have been made. In the event that distress occurs to the roadway due to the tunneling, the Contractor shall be required submit a plan to repair the roadway. The plan must be acceptable to the Division and other permitting agencies.

1.18 - STREAM AND DITCH CROSSING: The Contractor/Developer shall be responsible for securing 'wetlands' permits under Section 404 of the Clean Water Act, compliance with the River Corridors Protection Act, compliance with the Erosion and Sedimentation Act of 1975 (O.C.G.A. 12-7-6 (15)) as amended, and all other applicable laws and regulations while performing work adjacent to, or in crossing, streams and ditches. At all points where banks of streams or drainage ditches are disturbed by excavation or where natural vegetation is removed, carefully compact backfill and place rip rap to prevent subsequent settlement and erosion.

This requirement applies equally to construction along the side of a stream or drainage ditch as well as crossing stream or drainage ditch. Place rip rap a distance of not less than 10 feet upstream and 10 feet downstream from any disturbed area. Extend rip rap from 1 foot below streambed to top of bank. Place to conform to the natural slope of the stream bank.

Use only one method, either (a) or (b), throughout the job.

(a) Stone Rip Rap: Use sound, tough, durable stones resistant to the action of air and water. Slabby or shaley pieces will not be acceptable. Specific gravity shall be 2.0 or higher.

Minimum weight of individual stones shall be 50 pounds. The maximum allowable dimension for an individual stone is 24 inches. The minimum allowable dimension for an individual stone is 6 inches. At least 50% of the stones shall have a minimum dimension of 12 inches.

Imbed stone rip rap by hand so as to form a compact layer at least 12 inches thick. Place rip rap in such a way that the smaller stones are not segregated but evenly distributed. Place chinking stones in the crevices between the larger stones so that a dense, well graded mass is produced.

(b) Sand-Cement Bag Rip Rap: Use cement sacks or burlap bags having a capacity of from 1 to 2 cubic feet. Do not use bags previously used for sugar or chemicals. Fill bags with a mixture of one part Portland Cement to five parts sand.

Imbed bags by hand to form a compact layer at least 12 inches thick. Place with over lapping joints. The finished surface shall not deviate from that specified by more than 3 inches at any point.

1.19 – TESTING, INSPECTION, & REJECTION OF WORK: When a length of pipe approved by the Division is ready for testing, fill the line with water, bleed out all air and make a leakage test in accordance with the latest revision of AWWA C600.

(a) Preparation: Provide a test pump, an accurate water meter, and all other accessories required to make the test. Provide a corporation stop at each high point on the pipe to bleed off air. Provide and remove all temporary bulkheads, plugs, and flanges required to perform the pressure test.

(b) Test Pressure and Leakage: Test the pipe line at 200 psi measured at the lowest point. Leakage shall not exceed 0.11 gallons per hour per inch diameter per thousand feet. Test for a minimum of two hours. Test pressure shall not vary by more than ±5 psi for the duration of the test.

When testing against closed gate valves, an additional leakage per closed valve of 0.0078 gallons per hour per inch diameter of nominal valve size shall be allowed.

If leaks are detected, locate, repair, and retest. If results are not totally satisfactory, the Division may require testing for a longer period of time.

(c) Existing Valves: Do not operate valves in the existing system without the specific authorization and direct supervision of the Division.

(d) Testing of Materials: Unless otherwise specifically provided for in the Specifications, the inspection and testing of products to be incorporated in the work at the site shall be made by bureaus, laboratories, or agencies approved by the Owner and the cost of such inspection and testing shall be paid by the Contractor. The Contractor shall furnish evidence satisfactory to the Engineer that the products have passed the required tests prior to their incorporation into the work. The Contractor shall promptly segregate and remove rejected products from the site of the work.

(e) Inspection: The Contractor shall furnish the Engineer with every reasonable facility for ascertaining whether or not the work performed and products used are in accordance with the requirements and intent of the Specifications and Contract Documents. No work

shall be done or products used without suitable supervision or inspection by the Engineer or his representative. Failure to reject any defective work or product shall not in any way prevent later rejection when such defect is discovered, or obligate the Owner to final acceptance.

(f) Rejection of Work and Materials: All products furnished and all work done that is not in accordance with the Drawings or Specifications or that is defective will be rejected. All rejected products or work shall be removed immediately. If rejected products or work is not removed within forty-eight hours, the Engineer or Owner shall have the right and authority to stop the work immediately and shall have the right to arrange for the removal of said rejected products or work at the cost and expense of the Contractor. All rejected products or work shall be replaced with other products or work which conforms with the Drawings and Specifications.

(g) Contractor's Responsibility: Inspection of the work shall not relieve the Contractor of any of his obligations to fulfill his contract and defective work shall be made good regardless of whether such work has been previously inspected by the Engineer and accepted or estimated or payment. The failure of the Engineer to reject improper work shall not be considered a waiver of any defect which may be discovered later, or for work actually defective.

1.20 - DISINFECTING PIPE LINES: Disinfect all installed potable water lines and all other pipe lines which may have been contaminated by the work. The Contractor must coordinate with the Division for all sampling and bacteriological testing.

(a) Disinfection: Prepare a one percent chlorine solution using high-test calcium hypochlorite (HTH) and place an adequate quantity of this solution into the water mains to obtain a minimum chlorine concentration of 50 mg/l. Application of the chlorine may be at the time of filling for pressure testing. At the end of 24 hours check the chlorine residual and if found to be less than 25 mg/l add chlorine solution and check again after 24 hours.

The following is the minimum quantity of solution required per 100 feet of pipe line to obtain the desired concentration:

Pipe Size	Gallons of Solution	Solution Strength,%
1 inch	.02	1
2 inches	.08	1
3 inches	.18	1
4 inches	.32	1
6 inches	.73	1
8 inches	1.30	1
10 inches	2.04	1
12 inches	2.88	1
14 inches	0.38	10
16 inches	0.50	10

18 inches	0.63	10
20 inches	0.78	10
24 inches	1.12	10
30 inches	1.72	10

(b) Flushing: After completing chlorination, flush the line with potable water and test for chlorine residual at the point of discharge until the chlorine residual is equal to the chlorine residual of the water used for flushing. Allow the pipe line to remain full for 24 hours and take samples for bacteriological examination. Analyze these samples. Results must be acceptable to the State. If the samples are not satisfactory, perform additional sterilization until acceptable samples are obtained.

(c) Sampling: Sampling determinations of chlorine residual for sterilization and flushing shall be performed by the Division's laboratory personnel. Sampling will be available during normal business hours Monday through Friday. The Division shall be requested to perform such sampling and testing no less than 48 hours prior to the sampling time. The costs of all tests and sampling shall be the responsibility of the Contractor.

1.21 – EROSION AND SEDIMENT CONTROL: The Contractor/Developer shall observe all local laws and ordinances in relation to erosion and sediment control as they pertain to this project. All erosion control plans and construction shall be in accordance with the "Manual for Erosion and Sediment Control in Georgia" latest revision, the State of Georgia Erosion and Sedimentation Control Act of 1975 as amended in 1995, and Best Management Practices. All erosion control measures shall be designed to effectively control erosion and sedimentation for all rainfall events up to and including the 25-year, 24 hour rainfall.

The Contractor/Developer shall designate one individual to be responsible for implementation and maintenance of erosion and sedimentation controls on a 24-hour, everyday basis. The Contractor/Developer shall furnish to the City of Rome the individual's name, address and 24-hour telephone number and notify the City of any updates as necessary.

All erosion and sedimentation control measures must be installed prior to the initiation of any construction activity. Additional erosion and sedimentation control devices shall be installed as needed, or as directed by the City of Rome.

The City of Rome Public Works Division or Water and Sewer Division shall have the right to stop work when erosion and sediment control measures are not being implemented in accordance with Best Management Practices. No claim will be allowed by the Contractor/Developer for cost of downtime of men and equipment associated with any shutdown of the Contractor's operations.

1.22 - GRASSING: All graded and disturbed areas shall be grassed upon the completion of construction. This work shall consist of preparing ground surfaces and applying lime, fertilizer, seed and mulch in accordance with the Manual for Erosion Control in Georgia and Georgia D.O.T. Standard Specifications latest edition. The Contractor/Developer shall furnish water as necessary to obtain an acceptable stand of grass as defined below.

NOTE: All grass removed or damaged in residential areas shall be replaced using the same variety of grass at the first appropriate season.

Grassing shall follow backfill operations as closely as possible. At no time shall the amount of backfilled trench which has not been seeded and mulched exceed 400'.

Grassed areas shall be inspected by the City of Rome and shall be considered complete only if grassing has reached a point of maturity such that no bare spots shall be larger than one square foot. Any existing bare spots shall be evenly distributed among the total grassed area, and shall not make up more than on percent of total grassed area.

Appendix B of this specification contains grassing specifications for disturbed area stabilization as outlined in the Manual for Erosion and Sediment Control in Georgia.

1.23 - PROTECTION AND RESTORATION OF WORK AREA:

(a) General: Return all items and all areas disturbed, directly or indirectly by work under these Specifications, to their original condition or better, as quickly as possible after work is started.

(b) Man-Made Improvements: Protect, or remove and replace with the Division's approval, all fences, piers, docks, walkways, mailboxes, pipe lines, drain culverts, power and telephone lines and cables, and other improvements that may be encountered in the work.

(c) Cultivated Growth: Do not disturb cultivated trees or shrubbery unless approved by the Division. Any such trees or shrubbery that must be removed shall be heeled in and replanted under the direction of an experienced nurseryman.

(d) Cutting of Trees: Do not cut trees for the performance of the work unless specifically approved by the Division. Protect trees that remain in the vicinity of the work from damage from equipment. Do not store spoil from excavation against the trunks. Remove excavated material stored over the root system of trees within 30 days to allow proper natural watering of the root system. Repair any damaged tree over 3-inches in diameter, not to be removed, under the direction of an experienced nurseryman. All trees and brush that require removal shall be promptly and completely removed from the work area and disposed of by the Contractor. No stumps, wood piles, or trash piles will be permitted on the work site.

(e) Grassing: Replant grass removed or damaged in residential areas using the same variety of grass and at the first appropriate season. In all areas, promptly establish successful stands of grass as outlined in section 1.22 above and Appendix B.

(f) Erosion Control: Plan excavation work to prevent erosion and the washing of soil into adjacent streams. Limit the amount of open excavation at any one time. Place spoil in the proper place and keep natural water routes open.

(g) Disposal of Rubbish: Dispose of all materials cleaned and grubbed during the construction of the project in accordance with the applicable codes and rules of the appropriate regulatory agencies, county, state and federal. Burial of trees, limbs, stumps or other rubbish along or in trench shall is prohibited.

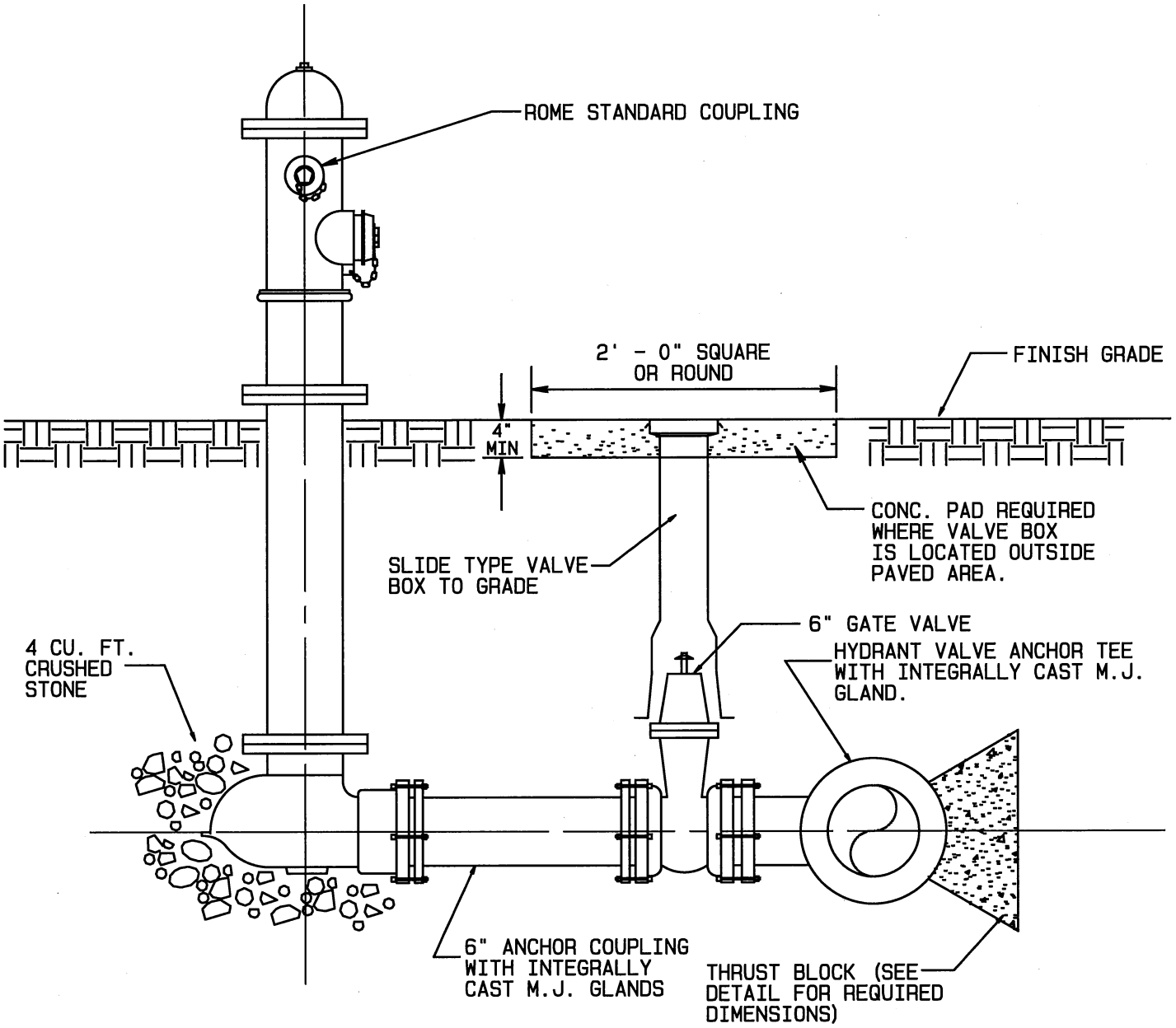

TYPICAL FIRE HYDRANT ASSEMBLY

NOT TO SCALE

NOTE: ALL FIRE HYDRANTS TO BECOME THE MAINTENANCE RESPONSIBILTY OF THE CITY OF ROME SHALL BE MUELLER CENTURION.

CITY OF ROME, GEORGIA
ENGINEERING DEPARTMENT

TYPICAL FIRE HYDRANT ASSEMBLY
STANDARD DETAIL

SCALE: AS SHOWN	**DRAWN BY:** BSI
DATE: MARCH 1998	**FINAL APPROVAL:**

EFFECTIVE DATE: 04-21-15 **SHEET** 1 **OF** 1

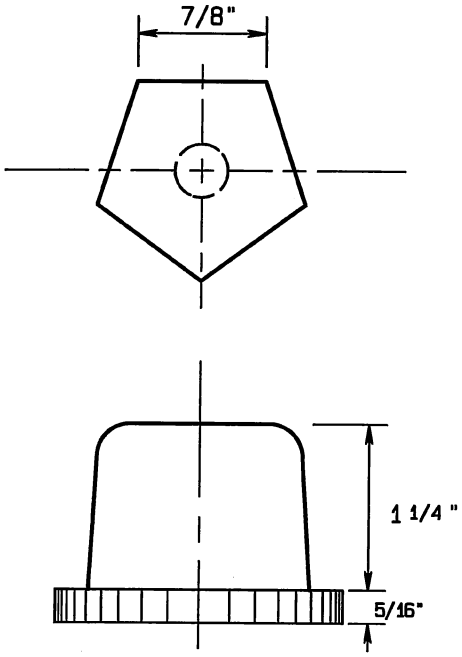

OPERATING NUT

NOT TO SCALE

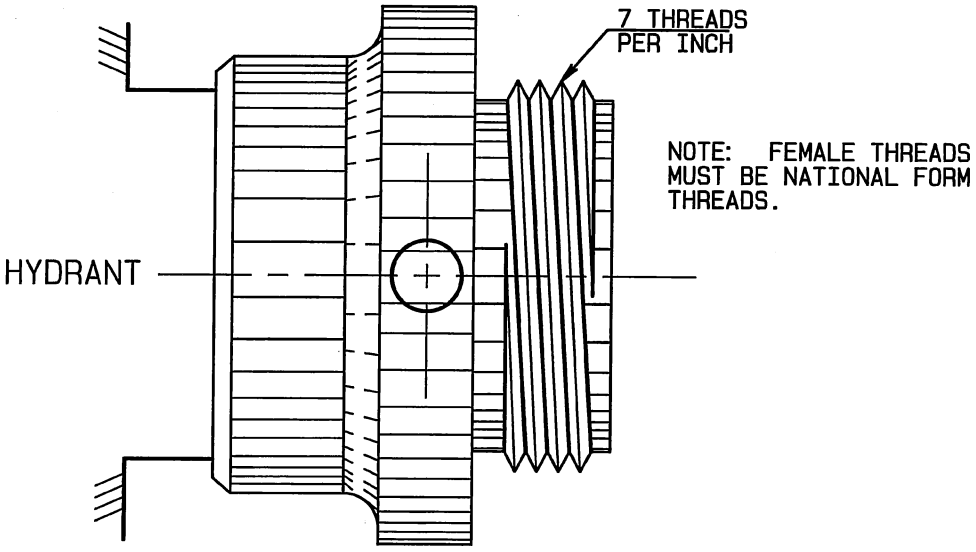

ROME STANDARD HOSE COUPLING

NOT TO SCALE

CITY OF ROME, GEORGIA
ENGINEERING DEPARTMENT

ROME STANDARD HOSE COUPLING
STANDARD DETAIL

SCALE: AS SHOWN	DRAWN BY: BSI
DATE: MARCH 1998	FINAL APPROVAL:

SHEET 1 OF 1

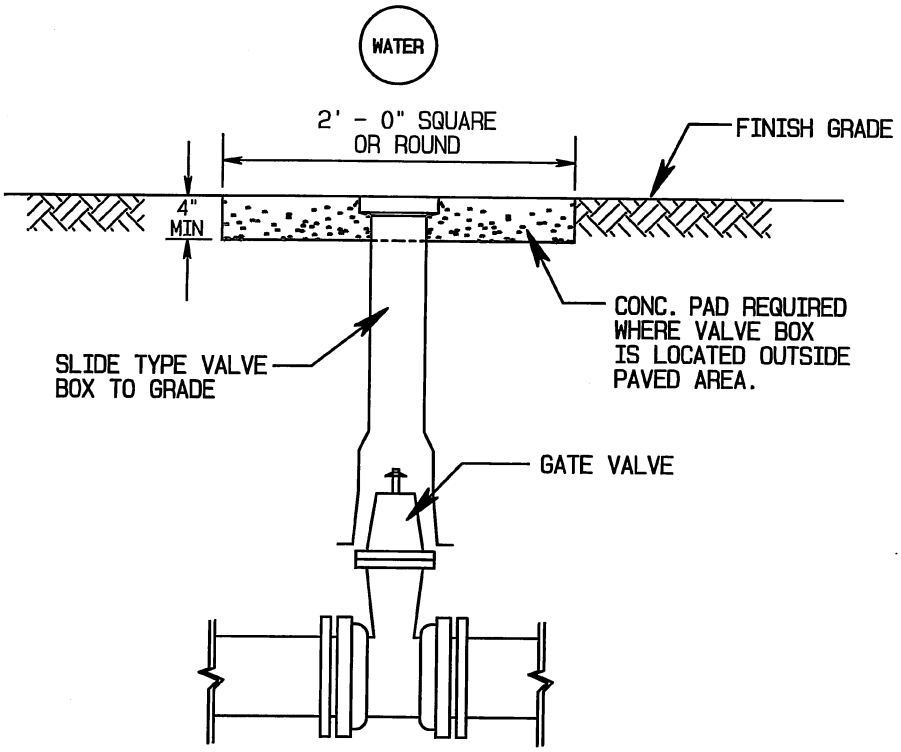

TYPICAL GATE VALVE & BOX

NOT TO SCALE

CITY OF ROME, GEORGIA
ENGINEERING DEPARTMENT

TYPICAL GATE VALVE & BOX
STANDARD DETAIL

SCALE: AS SHOWN	**DRAWN BY:** BSI
DATE: MARCH 1998	**FINAL APPROVAL:**

EFFECTIVE DATE: 10-21-08 **SHEET** 1 **OF** 1

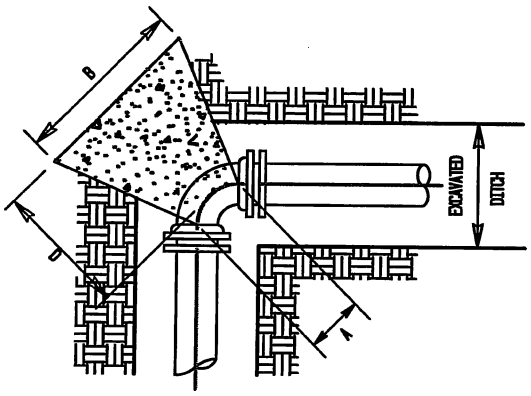

PLAN

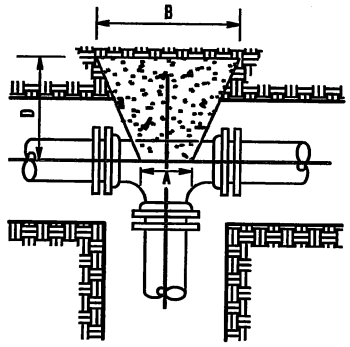

PLAN

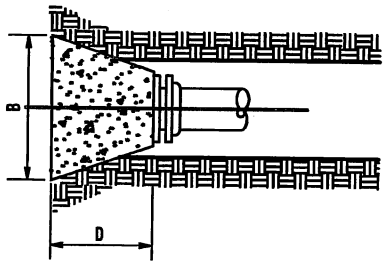

PLAN

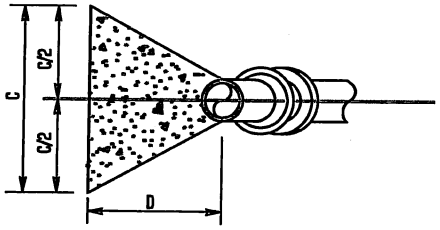

SECTION

THRUST BLOCKING - BENDS

N.T.S.

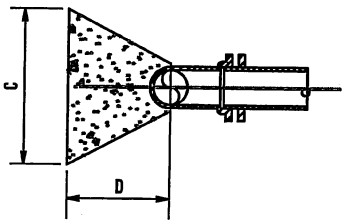

SECTION

THRUST BLOCKING - TEES

N.T.S.

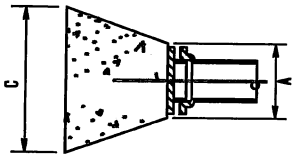

SECTION

THRUST BLOCKING - PLUGS

N.T.S.

THRUST BLOCK DIMENSIONS

PIPE SIZE	90 BEND				45 BEND				22 1/2 BEND				11 1/4 BEND				TEE OR PLUG			
	A	B	C	D	A	B	C	D	A	B	C	D	A	B	C	D	A	B	C	D
30"	2'-9"	10'-6"	10'-6"	7'-0"	1'-6"	7'-9"	7'-9"	4'-9"	1'-10"	5'-9"	5'-9"	3'-0"	1'-11"	4'-0"	4'-0"	2'-6"	2'-9"	8'-9"	9'-0"	5'-9"
24"	2'-7"	8'-6"	8'-6"	5'-9"	1'-3"	6'-3"	6'-3"	3'-9"	1'-8"	4'-6"	4'-6"	2'-3"	1'-9"	3'-3"	3'-3"	2'-3"	2'-6"	7'-0"	7'-3"	4'-9"
20"	2'-1"	7'-0"	7'-0"	4'-9"	1'-0"	5'-3"	5'-3"	3'-3"	1'-5"	4'-0"	4'-0"	2'-0"	1'-6"	2'-9"	2'-9"	2'-0"	2'-4"	6'-0"	6'-0"	3'-9"
18"	1'-11"	6'-0"	6'-0"	4'-0"	1'-0"	4'-9"	4'-9"	3'-0"	1'-3"	3'-6"	3'-6"	2'-0"	1'-4"	2'-6"	2'-6"	1'-9"	1'-2"	5'-3"	5'-6"	3'-6"
16"	1'-9"	5'-9"	5'-9"	4'-0"	0'-11"	4'-3"	4'-3"	2'-9"	1'-2"	3'-0"	3'-0"	1'-6"	1'-3"	2'-3"	2'-3"	1'-6"	1'-6"	4'-9"	4'-9"	3'-3"
14"	1'-7"	5'-0"	5'-0"	3'-6"	0'-10"	3'-9"	3'-9"	2'-6"	1'-1"	2'-9"	2'-9"	1'-6"	1'-2"	2'-0"	2'-0"	1'-3"	1'-6"	4'-0"	4'-3"	2'-9"
12"	1'-4"	4'-3"	4'-6"	3'-3"	0'-10"	3'-3"	3'-3"	2'-3"	1'-1"	2'-6"	2'-6"	1'-6"	1'-2"	1'-9"	1'-9"	1'-3"	1'-3"	3'-6"	3'-9"	2'-6"
10"	1'-3"	3'-9"	3'-9"	2'-9"	0'-9"	2'-9"	2'-9"	1'-9"	1'-0"	2'-0"	2'-0"	1'-3"	1'-0"	1'-6"	1'-6"	1'-0"	1'-3"	3'-0"	3'-0"	2'-0"
8"	1'-0"	3'-0"	3'-0"	2'-3"	0'-7"	2'-3"	2'-3"	1'-6"	0'-10"	1'-9"	1'-9"	1'-0"	0'-10"	1'-3"	1'-3"	1'-0"	1'-0"	2'-3"	2'-6"	1'-9"
6"	0'-11"	2'-3"	2'-3"	1'-9"	0'-7"	1'-9"	1'-9"	1'-3"	0'-9"	1'-6"	1'-6"	1'-0"	0'-9"	1'-0"	1'-0"	0'-9"	0'-11"	1'-9"	2'-0"	1'-6"
4"	0'-9"	1'-6"	1'-6"	1'-3"	0'-5"	1'-6"	1'-6"	1'-3"	0'-7"	1'-3"	1'-3"	1'-0"	0'-7"	0'-9"	0'-9"	0'-9"	0'-11"	1'-3"	1'-3"	1'-0"

NOTES:

1. THRUST BLOCKING TO BE CLASS "B" CONCRETE, NO SAKRETE OR QUICKRETE PERMITTED.
2. DIMENSIONS CALCULATED USING A SOIL LOAD BEARING CAPACITY OF 2000 PSF. IF SOIL BEARING CAPACITY IS FOUND TO BE LESS THAN 2000 PSF, THE CONTRACTOR SHALL INCREASE THESE DIMENSIONS.
3. THRUST BLOCKING SHALL BEAR AGAINST UNDISTURBED SOIL.
4. DESIGN PRESSURE = 200 PSI.

CITY OF ROME, GEORGIA
ENGINEERING DEPARTMENT

TYPICAL THRUST BLOCKING
STANDARD DETAIL

SCALE: AS SHOWN	DRAWN BY: BSI
DATE: MARCH 1998	FINAL APPROVAL:

EFFECTIVE DATE: 10-21-08 SHEET 1 OF 1

ALL BEDDING MATERIAL AROUND MANHOLES IN PAVED AREAS SHALL BE COVERED WITH SILT FENCE FILTER FABRIC MEETING OR EXCEEDING GDOT STANDARD 881-2-07 FOR TYPE "C" FENCING. FABRIC SHALL EXTEND A MINIMUM OF 12-INCHES UP TRENCH WALLS, SIDE OF MAHOLE AND SHALL HAVE A MINIMUM OF 12-INCHES OF OVERLAP.

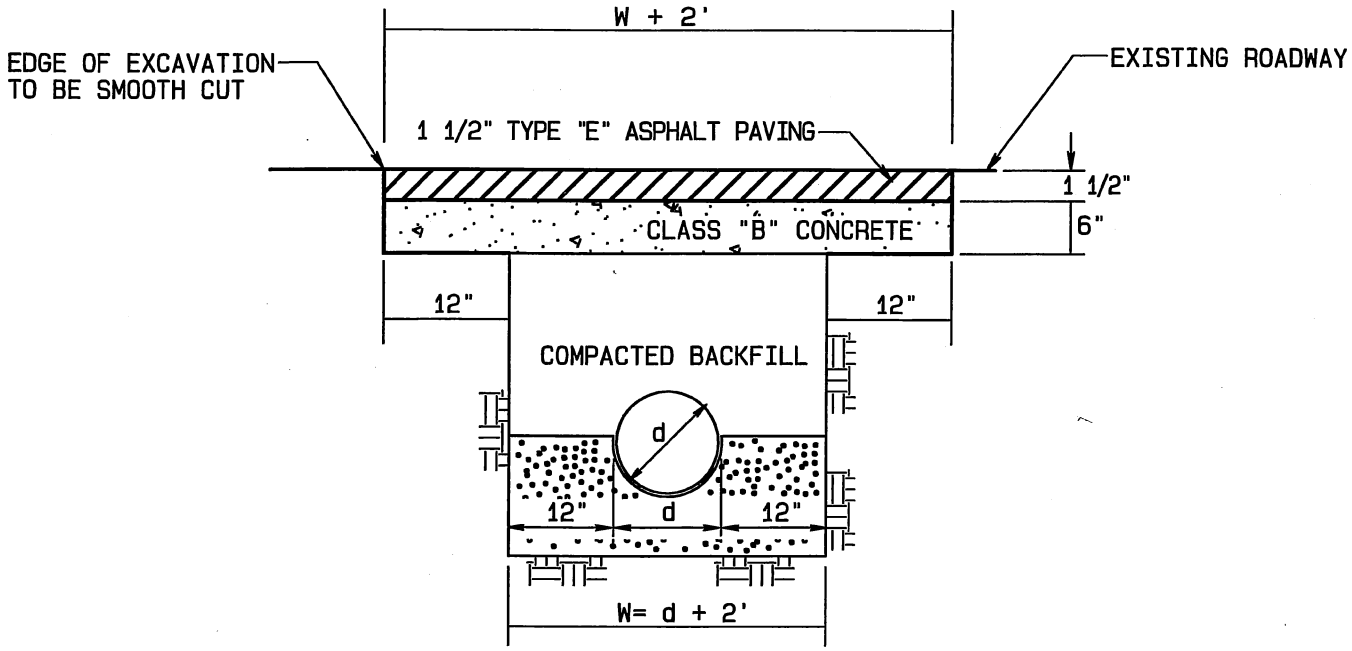

NOTE: ALL TRENCHES SHALL BE BACKFILLED AND RETURNED TO 95% COMPACTION ON THE SAME DAY THE TRENCH IS OPENED.

REPAIR OF ROADWAY CUT DETAIL

NOT TO SCALE

BACKFILL MATERIAL TO BE APPROVED BY A REPRESENTATIVE OF THE CITY OF ROME.

CONTRACTOR/UTILITY SHALL MAKE TWO (2) CUTS ACROSS THE STREET OR AROUND CUT-OUT. THE FIRST SAW CUT SHALL ALIGN WITH THE TRENCH/HOLE WALL. INITIAL EXCAVATION SHALL BE LIMITED TO THAT AREA. THE SECOND SAW CUT SHALL BE MADE AT THE LIMITS OF THE PATCH AREA WITH NO EXCAVATION TAKING PLACE IN THE 12-INCH AREA ON EACH SIDE OF THE TRENCE/HOLE UNTIL THE TRENCH HAS BEEN BACKFILLED UP TO AN ELEVATION 7-1/2-INCHES LOWER THAN THE ROADWAY.

TRENCH SHALL BE INSPECTED BY A REPRESENTATIVE OF THE CITY OF ROME FOR PROPER COMPACTION PRIOR TO THE PLACEMENT OF THE CONCRETE.

CITY OF ROME, GEORGIA
ENGINEERING DEPARTMENT

REPAIR OF ROADWAY CUT
STANDARD DETAIL

SCALE: AS SHOWN	DRAWN BY: BSI
DATE: MARCH 1998	FINAL APPROVAL:
EFFECTIVE DATE: 11-07-13	SHEET 1 OF 1

NOTES:

1. CONTRACTOR SHALL INSTALL CORPORATION STOP, COPPER SERVICE LINE, CURB STOP AND METER BOX.

2. EACH LOT SHALL HAVE AN INDIVIDUAL TAP AND SERVICE LINE.

3. THE LETTER "W" TO BE STAMPED OR CUT INTO THE UPPER PORTION (NOT IN THE FLOW LINE) OF CURB WHERE THE SERVICE LINE PASSES UNDER.

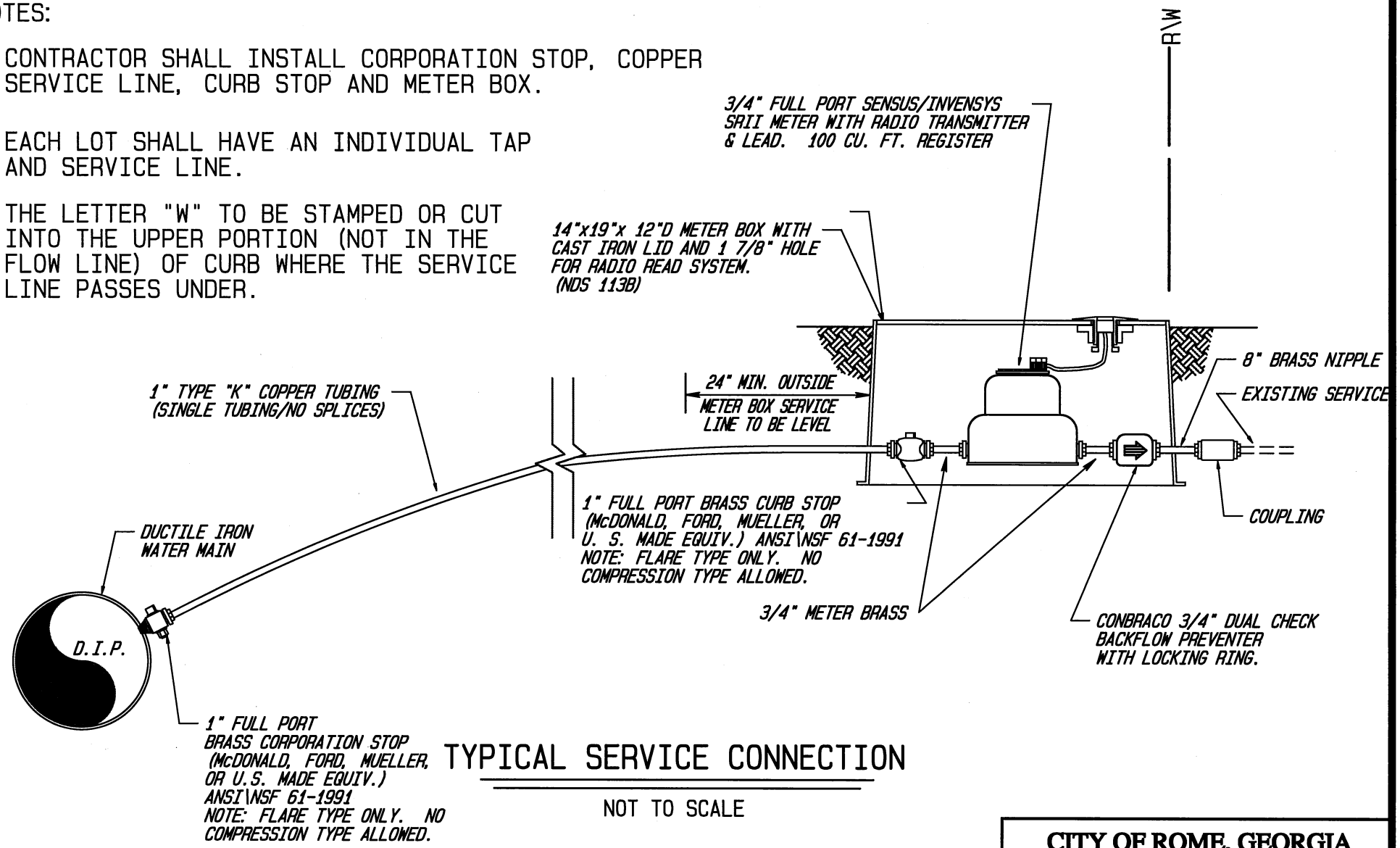

TYPICAL SERVICE CONNECTION

NOT TO SCALE

CITY OF ROME, GEORGIA
ENGINEERING DEPARTMENT

TYPICAL WATER SERVICE CONNECTION STANDARD DETAIL (SINGLE FAMILY LOT)

SCALE: AS SHOWN	DRAWN BY: BSI
DATE: 11/01/01	FINAL APPROVAL:

EFFECTIVE DATE: 12-23-14 SHEET 1 OF 1

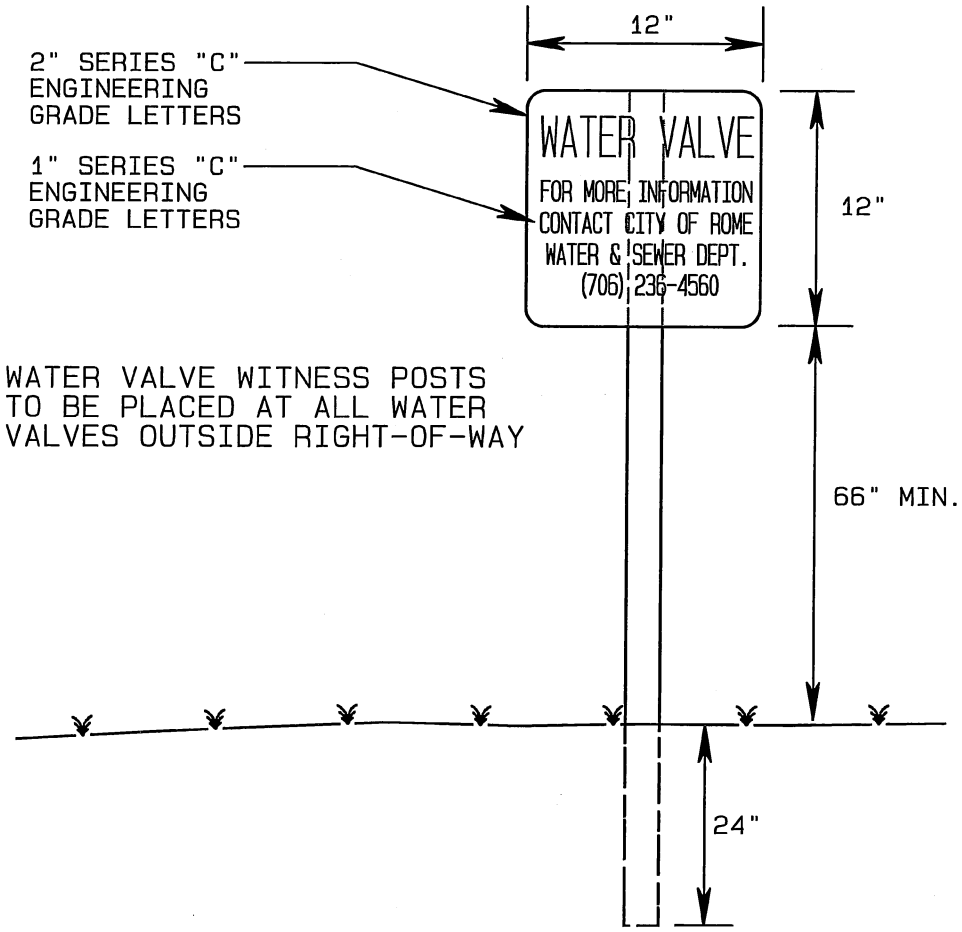

WITNESS POST DETAIL

N.T.S.

CITY OF ROME, GEORGIA
ENGINEERING DEPARTMENT

VALVE WITNESS POST
STANDARD DETAIL

SCALE: AS SHOWN	DRAWN BY: BSI
DATE: NOV. 1998	FINAL APPROVAL:

SHEET 1 OF 1

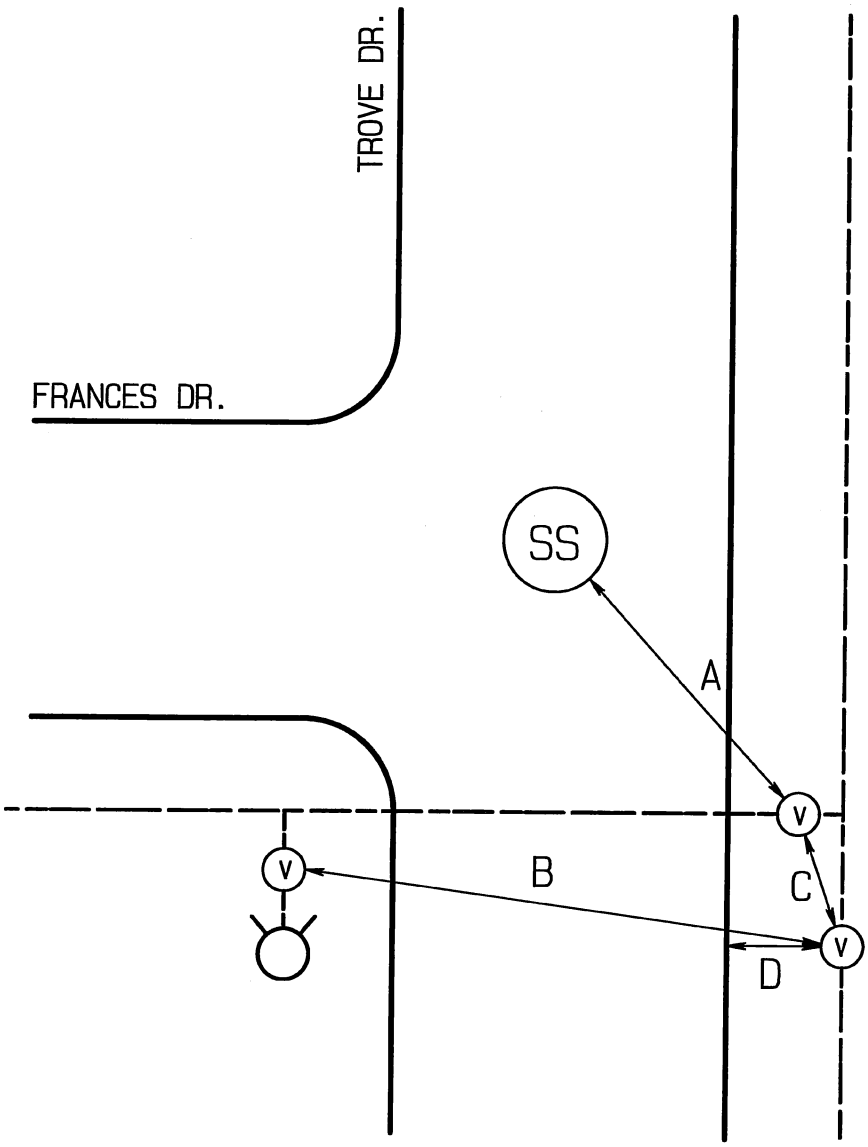

A - 30'-4"
B - 62'-2"
C - 2'-2"
D - 9'-6" TO B.C.

CITY OF ROME, GEORGIA
ENGINEERING DEPARTMENT

VALVE LOCATION SKETCH
SAMPLE DRAWING

SCALE: AS SHOWN	DRAWN BY: BSI
DATE: FEB. 1999	FINAL APPROVAL:

SHEET 1 OF 1

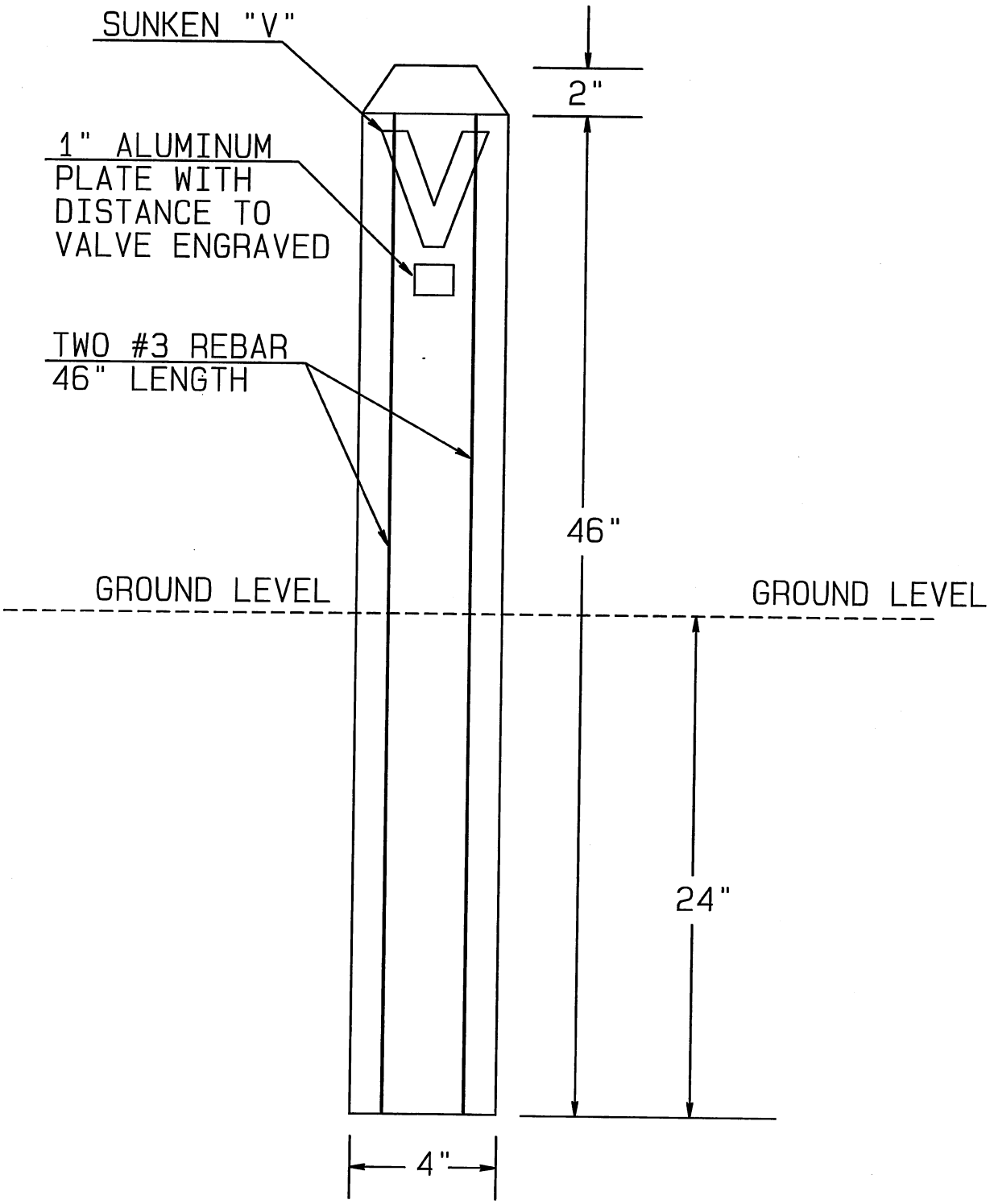

TYPICAL CONCRETE VALVE MARKER

NOT TO SCALE

CITY OF ROME, GEORGIA
ENGINEERING DEPARTMENT

TYPICAL CONCRETE VALVE MARKER

SCALE: AS SHOWN	DRAWN BY: SAF
DATE: MAY 2005	FINAL APPROVAL:

SHEET 1 OF 1

NOTES:

1. CONTRACTOR SHALL INSTALL CORPORATION STOP, COPPER SERVICE LINE, CURB STOP, LID, AND METER BOX.
2. EACH UNIT SHALL HAVE AN INDIVIDUAL TAP AND SERVICE LINE.
3. THE LETTER "W" TO BE STAMPED OR CUT INTO THE UPPER PORTION (NOT IN THE FLOW LINE) OF CURB WHERE THE SERVICE LINE PASSES UNDER.

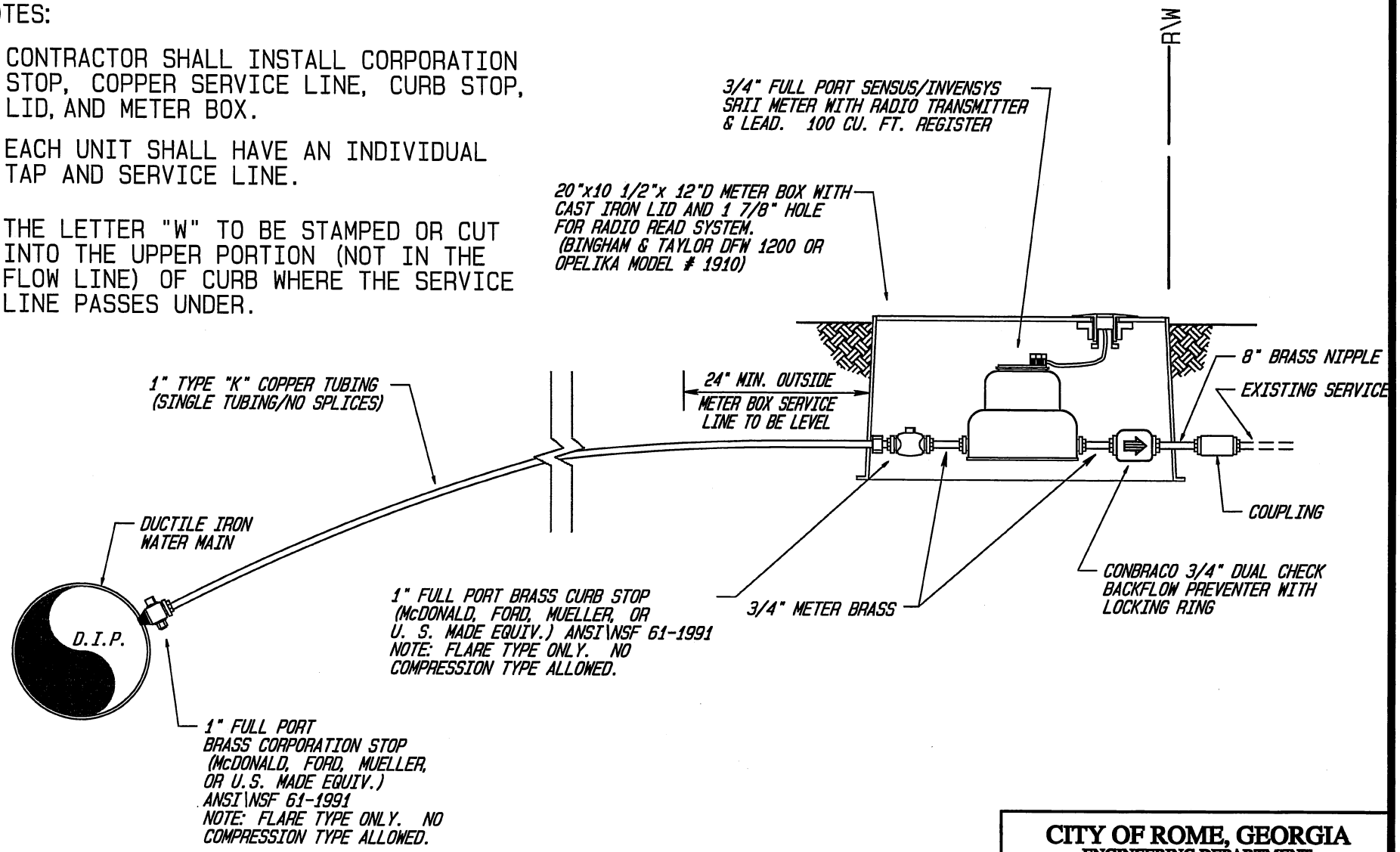

TYPICAL SERVICE CONNECTION

NOT TO SCALE

CITY OF ROME, GEORGIA
ENGINEERING DEPARTMENT

TYPICAL WATER SERVICE CONNECTION STANDARD DETAIL (DUPLEX LOT)

SCALE: AS SHOWN	DRAWN BY: BSI
DATE: 06/17/02	FINAL APPROVAL:

EFFECTIVE DATE: 12-04-08 SHEET 1 OF 1

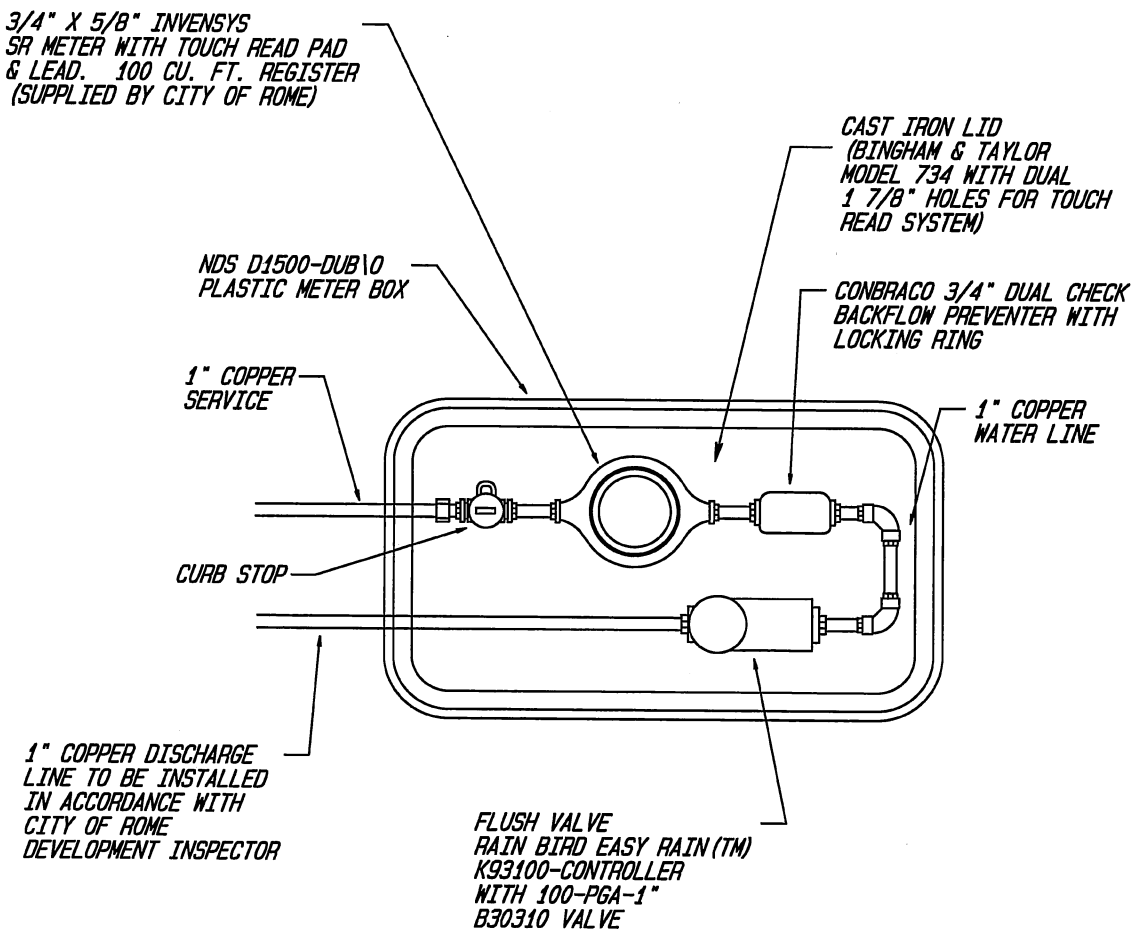

TYPICAL AUTOMATIC FLUSH INSTALLATION

NOT TO SCALE

CITY OF ROME, GEORGIA
ENGINEERING DEPARTMENT

AUTOMATIC FLUSH INSTALLATION
STANDARD DETAIL

SCALE: AS SHOWN	**DRAWN BY:** BSI
DATE: 05-01-05	**FINAL APPROVAL:**

EFFECTIVE DATE: 05-01-05 **SHEET** 1 **OF** 1

FIRE LINE SERVICE & VAULT DETAIL

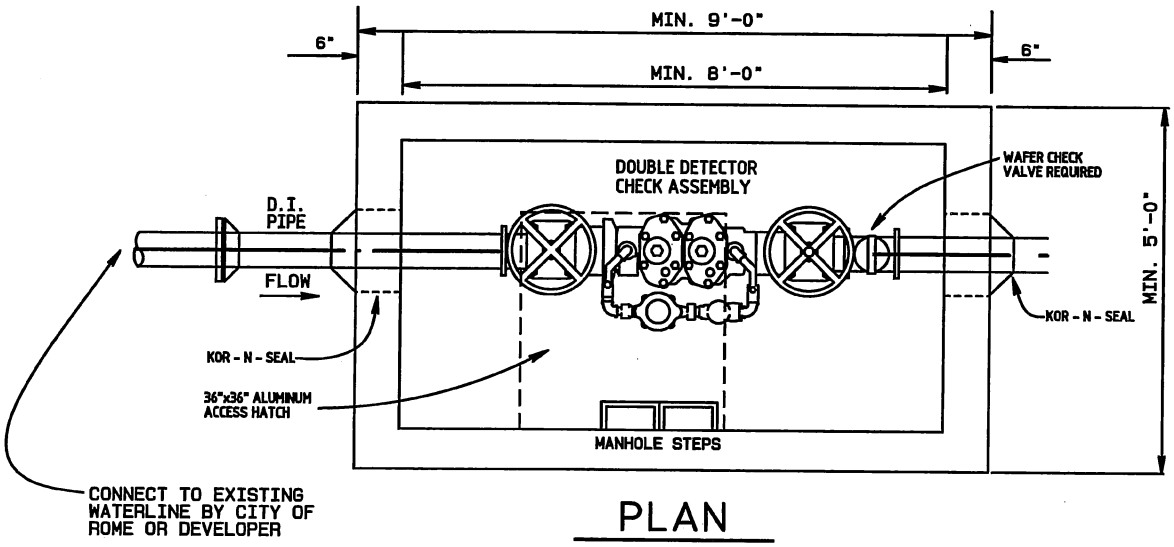

PLAN

N.T.S.

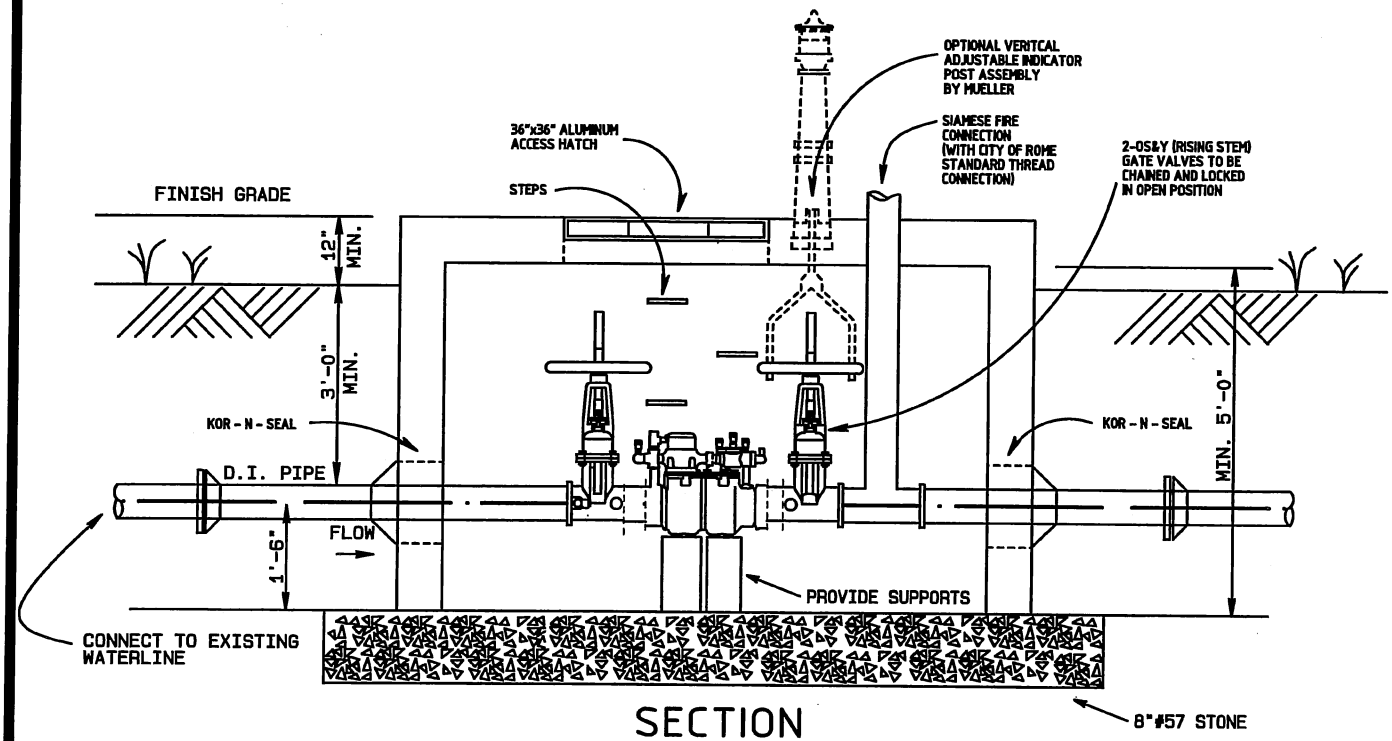

SECTION

N.T.S.

NOTES:

1. MECHANICAL JOINT FITTINGS SHALL BE USED OUTSIDE THE PIT AND FLANGED FITTINGS INSIDE THE PIT.
2. DOUBLE DETECTOR CHECK VALVE (DDCV) ASSEMBLY TO BE WATTS OR EQUAL.
3. DEVICE TESTING: ALL DDCV ASSEMBLIES SHALL BE TESTED AT TIME OF INSTALLATION AND AT LEAST ANNUALLY THEREAFTER BY AN APPROVED AND CERTIFIED TESTING SERVICE AND COPY OF TEST SUBMITTED TO THE CITY OF ROME WATER DEPARTMENT

A-12

CITY OF ROME, GEORGIA **ENGINEERING DEPARTMENT**	
FIRE LINE SERVICE & VAULT DETAIL	
SCALE: AS SHOWN	**DRAWN BY:** KEH/AWC
DATE: APRIL 2009	**FINAL APPROVAL:**
EFFECTIVE 06/27/2012	**SHEET** 1 **OF** 1

NOTES:

1. CITY OF ROME WATER AND SEWER DIVISION SHALL INSTALL CORPORATION STOP, COPPER SERVICE LINE, CURB STOP, METER AND METER BOX.

2. DEVELOPER TO PROVIDE AND INSTALL A "TESTABLE" DOUBLE CHECK VALVE (DCV) ON ALL METERS 2" AND LARGER. ALL METERS SMALLER THAN 2" SHALL HAVE A "COMBRACO" DUAL CHECK BACKFLOW PREVENTER WITH LOCKING RING AND 6" LONG BRASS NIPPLE INSTALLED BY THE CITY OF ROME.

3. IRRIGATION METERS SHALL HAVE A RPZ TYPE BACK FLOW PREVENTER (BY OWNER) OR SHALL BE INSTALLED WITH A DOUBLE CHECK VALVE (DCV) IN COMPLIANCE WITH NO. 2 ABOVE ALONG WITH A WRITTEN GURANTEE STATING THAT NO CHEMICALS SHALL BE INJECTED INTO SAID IRRIGATION LINE. THE DESIGN PLANS SHALL CLEARLY INDICATE THEREON WHICH WILL BE USED AND WHAT SIZE METER IS REQUIRED.

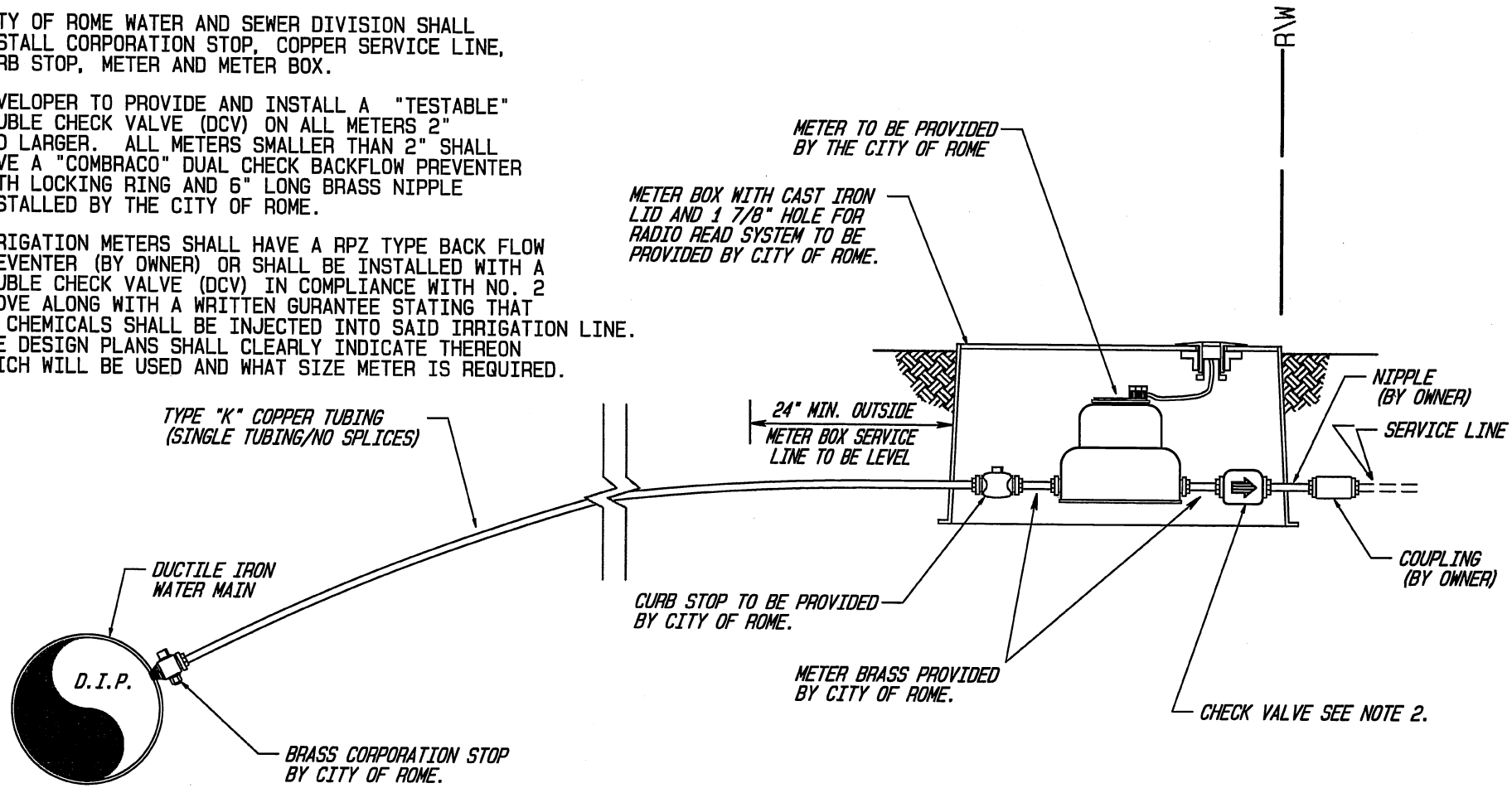

A-13

TYPICAL SERVICE CONNECTION

NOT TO SCALE

CITY OF ROME, GEORGIA
ENGINEERING DEPARTMENT

TYPICAL WATER SERVICE CONNECTION STANDARD DETAIL (COMMERICAL)

SCALE: AS SHOWN	DRAWN BY: AWC
DATE: 06/27/12	FINAL APPROVAL:

EFFECTIVE DATE: 06-27-12 SHEET 1 OF 1

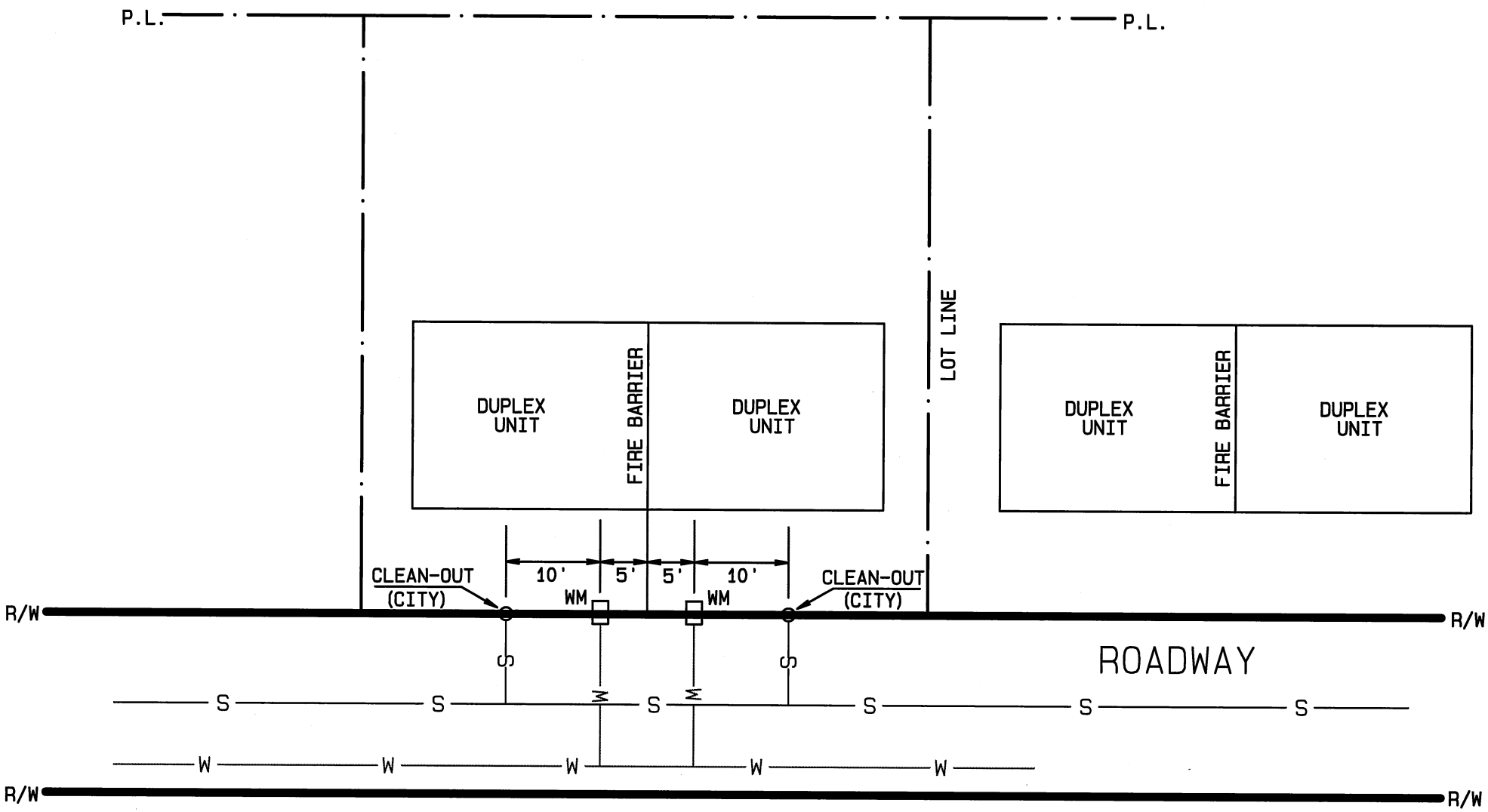

CITY OF ROME, GEORGIA
ENGINEERING DEPARTMENT

WATER AND SEWER SERVICE LOCATION
DETAIL FOR DUPLEX LOTS

SCALE: NONE	**DRAWN BY:** AWC
DATE: JUNE 9, 2004	**FINAL APPROVAL:**

EFFECTIVE DATE: 06-09-04 **SHEET** 1 **OF** 1