THE CITY OF
ROME, GEORGIA

WATER AND SEWER DIVISION

PROJECT MANUAL FOR

HORSELEG CREEK SANITARY SEWER PUMP STATION ADDITION

OWNER BID #-006-20
PROJECT NUMBER 16120.04

February, 2020

PREPARED BY:

InSite Engineering, LLC
5800 Feldspar Way
Hoover, Alabama 35244
Telephone: (205) 733-9696
Fax: (205) 733-9697

GEORGIA REGISTERED No. PE042260 PROFESSIONAL ENGINEER MATTHEW STEPHEN GOLAB

2/5/20

© 2020

THE CITY OF
ROME, GEORGIA

WATER AND SEWER DIVISION

PROJECT MANUAL FOR

HORSELEG CREEK SANITARY SEWER PUMP STATION ADDITION

OWNER BID #-006-20
PROJECT NUMBER 16120.04

February, 2020

PREPARED BY:

InSite Engineering, LLC
5800 Feldspar Way
Hoover, Alabama 35244
Telephone: (205) 733-9696
Fax: (205) 733-9697

© 2020

This page intentionally left blank.

Division	Section Title	Pages
DIVISION 0	**PROCUREMENT AND CONTRACTING REQUIREMENTS**	
001116	INVITATION TO BID	2
	MEMORANDUM CITY OF ROME PURCHASING DEPARTMENT	1
	INSTRUCTION FOR BIDDERS	2
002113	ADDITIONAL INSTRUCTIONS TO BIDDERS	8
004100	BID SECURITY FORMS	2
004100.01 ..	EJCDC C-430 BID BOND (PENAL SUM FORM)	2
	BID FORM	1
004113	BID FORM – STIPULATED SUM (SINGLE-PRIME CONTRACT)	4
	BIDDERS DECLARATION	1
	CERTIFICATION OF NON-DISCRIMINATION	1
	NON-COLLUSION AFFIDAVIT	1
	STATE OF GEORGIA PROMPT PAY ACT AFFIDAVIT	1
	REQUEST FOR TAXPAYER ID NUMBER AND CERTIFICATION	1
	DRUG-FREE WORKPLACE CERTIFICATE	1
	E-VERIFY COMPLIANCE AFFIDAVIT	1
	SAVE COMPLIANCE AFFIDAVIT	1
004300	PROCUREMENT FORM SUPPLEMENTS	4
005213.12 ...	AGREEMENT FORM – EJCDC STIPULATED SUM (SINGLE-PRIME CONTRACT	2
005213.13 ..	EJCDC C-520 SUGGESTED FORM OF AGREMENT BETWEEN OWNER AND CONTRACTOR FOR CONSTRUCTION CONTRACT (STIPULATED PRICE)	8
006000	PROJECT FORMS	2
006100	EJCDC C-610 PERFORMANCE BOND	4
006150	EJCDC C-615(A) PAYMENT BOND	4
007213.12 ..	GENERAL CONDITIONS – EJCDC STIPULATED SUM (SINGLE-PRIME CONTRACT)	2
	EJCDC C-700 STANDARD GENERAL CONDITIONS OF THE CONSTRUCTION CONTRACT	72
007314	SUPPLEMENTARY CONDITIONS - EJCDC	4
DIVISION 1 -	**GENERAL REQUIREMENTS**	
011000….	SUMMARY	4
012000	PRICE AND PAYMENT PROCEDURES	6
012000.1	EJCDC C-620 CONTRACTOR'S APPLICATION FOR PAYMENT	4
012000.2	EJCDC C-940 WORK CHANGE DIRECTIVE	2
012000.3	EJCDC C-941 CHANGE ORDER	2
012000.4	EJCDC C-942 FIELD ORDER	2
012000.5	REQUEST FOR INFORMATION FORM	2
012500	SUBSTITUTION PROCEDURES	2
012500.1	SUBSTITUTION REQUEST FORM	4

013000 ..... ADMINISTRATIVE REQUIREMENTS 4
013216 ..... CONSTRUCTION PROGRESS SCHEDULE 2
013300 ..... SUBMITTAL PROCEDURES 8
014000 ..... QUALITY REQUIREMENTS 4
014200 ..... REFERENCES 18
014500 ..... UNCOVERING AND CORRECTION OF WORK 2
015000 ..... TEMPORARY FACILITIES AND CONTROLS 8
016000 ..... PRODUCT REQUIREMENTS 2
017000 ..... EXECUTION AND CLOSEOUT REQUIREMENTS 14
017310 ..... CUTTING AND PATCHING 4
017320 ..... SELECTIVE DEMOLITION 8
017419 ..... CONSTRUCTION WASTE MANAGEMENT AND DISPOSAL 4
017810 ..... PROJECT RECORD DOCUMENTS 4

DIVISION 11 – EQUIPMENT
115000 ..... DUPLEX PACKAGE GRINDER PUMP STATION 14
116000 ..... DUPLEX SUBMERSIBLE PUMP STATION 24

DIVISION 26 – ELECTRICAL
260500 ..... BASIC ELECTRICAL MATERIALS AND METHODS 10
260519 ..... POWER CONDUCTORS AND CABLES 51V – 600V 6
260526 ..... GROUNDING 4
260533 ..... RACEWAYS 9
260534 ..... OUTLET BOXES, JUNCTION BOXES, WIREWAYS 3
260553 ..... ELECTRICAL IDENTIFICATION 6
262726 ..... WIRING DEVICES 2
262816 ..... SAFETY SWITCHES AND FUSES 2
262900 ..... MANUFACTURED CONTROL PANELS 12
263213 ..... GENERATOR SETS 15
263623 ..... AUTOMATIC TRANSFER SWITCHES 9
264300 ..... SURGE PROTECTIVE DEVICES 5
265000 ..... LIGHTING MATERIALS AND METHODS 2
270500 ..... AUXILIARY SYSTEM CABLES, 0 – 50V 4

DIVISION 31 – EARTHWORK
311000 ..... SITE CLEARING 4
312316 ..... EXCAVATION 4
312316.01 .. UNCLASSIFIED EXCAVATION FOR UTILITIES 8
312319 ..... DEWATERING 4
312500 ..... EROSION AND SEDIMENTATION CONTROL 6

DIVISION 32 – EXTERIOR IMPROVEMENTS
321216 ..... ASPHALT PAVING 8
329221 ..... LAWNS AND GRASSES 6

DIVISION 33 – UTILITIES

330505.36 .. VACUUM TESTING 4
330505.41 .. AIR TESTING 4
330561 ..... CONCRETE MANHOLES 8
333100 ..... SANITARY SEWER PIPING 6

APPENDIX

A..... CITY OF ROME STANDARD WATER LINE SPECIFICATIONS AND STANDARD DETAILS 42

END OF TABLE OF CONTENTS

This page intentionally lefty blank.

SECTION 001116 - INVITATION TO BID

1.1 BID INFORMATION

A. InSite Project: 16120.04 Horseleg Creek Sanitary Sewer Pump Station Addition
B. Owner Bid # 006-20 Horseleg Creek Sanitary Sewer Pump Station Addition
C. Owner: The City of Rome, Georgia
D. Engineer: InSite Engineering, LLC
E. Names of Bidders:
   1. All Bidders.

1.2 ANNOUNCEMENT

A. All qualified bidders are invited to submit a Bid under sealed envelope to The City of Rome, Georgia for the construction of a 8" PVC gravity sanitary sewer line, HDPE force main, sanitary sewer service laterals, 6' diameter precast wet well, sanitary sewer pumping station, package sanitary sewer pumping station, manholes, manhole frames and covers, connection to existing sanitary sewer system, access drive, erosion control, traffic control, all associated appurtenances, grouting and abandonment of existing sanitary sewer lines, and manhole decommissioning located at Horseleg Creek Road, Rome, Georgia 30161. The Owner will receive Bids at the City of Rome – Purchasing Department, Attention: Becky Smyth, located at 601 Broad Street, Rome, Georgia, 30161 until 10:00 A.M. local standard time on the 10th day of March, 2020. Mailed Bids are to be sent to the City of Rome – Purchasing Department, Attention: Becky Smyth, 601 Broad Street, Rome, Georgia, 30161. **Bids not received by 10:00 A.M. local standard time on the 10th day of March, 2020 will not be opened.**

B. The Bids will be publicly opened and read aloud at 10:00 A.M. local standard time on the 10th day of March, 2020 at the City of Rome – Purchasing Department, located at 601 Broad Street, Georgia, 30161.

C. Owner requires the Project to be substantially completed within **120** days after the date when the Contract Times commence to run as dated in the Notice to Proceed and completed and ready for final payment within **150** days after the date when the Contract Times commence to run as dated in the Notice to Proceed.

D. Bid Documents can be obtained only by General Contractors and Bidders at www.insiteengineering.org and www.romefloyd.com. Others may view the Bid Documents online at www.insiteengineering.org and www.romefloyd.com.

E. Bidders will be required to provide Bid security according to the requirements in Bid Document Instruction to Bidders.

F. Other Bidding requirements are described in Bid Document Instructions to Bidders.

G. Submit your Bid on the Bid Form provided. Bidders are required to complete all sections and requirements as stated with the Contract Documents.

H. Bids will be required to be submitted under a condition of irrevocability for a period of no less than 60 days after submission.

I. A mandatory Pre-Bid Meeting will not be held. Each bidder can schedule a time to view the site and construction area through the office of the Engineer.

J. Owner reserves the right to waive irregularities and to accept or reject any or all Bids.

END OF DOCUMENT 001116

ROME
G·E·O·R·G·I·A
EST. 1834
Purchasing Department

M E M O R A N D U M

TO: Prospective Bidders

FROM: Becky Smyth, Purchasing Director

RE: Request for Bid -#006-20 Horseleg Creek Sanitary Sewer Pump Station Addition

DATE: February 4, 2020

Enclosed you will find the necessary information for preparing and submitting your bid for Construction **of the Horseleg Creek Sanitary Sewer Pump Station Addition** for the City of Rome Georgia.

The deadline for submitting your bid is **March 10, 2020 at 10:00 a.m.**

Interested parties may receive a copy of the proposal request by logging on to the City of Rome, Georgia website at www.romefloyd.com. All questions regarding the proposal should be sent to Jackson Abercrombie, jabercrombie@romega.us no later than **February 28, 2020 at 5:00 p.m**. All questions and answers will be posted on the City of Rome website. It is the responsibility of interested parties to visit the site regularly to insure receipt of any new information that may be provided.

If you have further questions, please do not hesitate to call my office at 706-236-4410.

_____
Becky Smyth
Purchasing Director

601 Broad Street • PO Box 1433 • Rome, Georgia 30162-1433
phone: 706/236-4410 • *fax:* 706/236-4549
www.romega.us

This page intentionally left blank.

INSTRUCTIONS FOR BIDDERS

I. Bids must be received by **March 10, 2020** at **10:00 a.m.**

II. Bids must be delivered to:

City of Rome
601 Broad Street
Rome, Georgia 30161

III. Bids must be sealed and marked:

"006-20 HORSELEG CREEK SANITARY SEWER PUMP STATION ADDITION"

IV. Bids must be complete and include:

A. Completed Bid Proposal Form
B. Executed Bidder's Declaration
C. Executed Certificate of Non-Discrimination
D. Executed Affidavit of Non-Collusion
E. Prompt Payment Affidavit
F. Request for Taxpayer I.D. Number
G. Completed Drug-Free Certificate
H. SAVE Affidavit
I. E-Verify Affidavit

All bids submitted shall be subject to acceptance or rejection and the City of Rome specifically reserves the right to accept or reject any or all bids, to waive any technicalities and formalities in the bidding.

Bidder shall submit all required forms and information simultaneously with sealed bids, which forms and information become a part of the property of the City of Rome and will not be returned to bidders unless a written request to withdraw is received prior to **March 10, 2020 at 10:00 a.m.**

V. Payment:

When contracts are awarded, payment by the City of Rome will be the normal 30-day cycle. However, the City does make every effort to honor all discounts.

Introduction

The City of Rome is requesting proposals from contractors interested in providing services for the construction of the Horseleg Creek Sanitary Sewer Pump Station addition.

Questions and Amendments

Any questions regarding this RFP shall be submitted by email to jabercrombie@romega.us by **February 28, 2020 at 5:00 p.m. EST**. All questions will be answered and made publicly available. The City of Rome reserves the right to amend the RFP for any reason.

Proposal Submission

Proposals must be received no later than **10:00 a.m. EST on March 10, 2020**. Proposals received after this time will not be accepted or opened. The City of Rome reserves the right to contract in its best interests and to reject any and all bids at any time prior to award. The City of Rome will only accept proposals submitted in hard copy. All responses to this RFP must be made in accordance with the specifications as set forth herein. Failure to adhere to any specifications contained herein may be cause for your proposal to be rejected.
Contractors shall submit six (4) paper copies of the proposal. Proposals must be sealed in a package marked with the name and address of the contractor. The City of Rome will date stamp the package with the submission date and submission time when it is received. Additionally, the sealed package in which the proposal is submitted should be labeled **"006-20 HORSELEG CREEK SANITARY SEWER PUMP STATION ADDITION"**. Proposals that are faxed will not be accepted.

All completed proposals should be mailed or delivered to:

City of Rome
601 Broad Street
Rome, GA 30161

Responsive written proposals shall contain the information below:

- Product Description
  - Submit all required product data that is identified in the technical specifications.
- Experience
  - Describe the history of your firm
  - Describe your firm's experience
- Key Personnel
  - Provide an organizational chart for implementing and managing the project including the responsibilities of each individual
  - Identify your proposed key personnel and their specific experience
  - Provide the names, addresses and phone numbers of three client project owners to be used as a reference
- Cost

Proposal Evaluation Process

Proposals will be evaluated by a committee comprised of City representatives. The evaluation process will include review of qualifications, proposed schedule and costs, and other information submitted with the proposal. Non-responsive or incomplete proposals will be rejected for further consideration.

The City of Rome reserves the right to waive any informality or irregularity in any bid, to reject any and all bids, to award a bid wholly or in part, to call for re-bid, and to negotiate with any contractor, if it is deemed in the best interest of the City of Rome to do so. As part of the evaluation process, the contractor may be required to attend one or more meetings with the City of Rome for the purpose of clarifying materials, products, services, and pricing. The selection process may include requests for additional information from individual contractors regarding the proposed materials, products, scope of services, pricing, and product specifications.

REQUIREMENTS FOR BIDDERS

These items apply to and become a part of the terms and conditions of the bidders bid. Any exceptions must be in writing.

Notice is hereby given that the City of Rome will receive sealed bids from interested parties until **March 10, 2020 at 10:00 a.m.** at its offices located at 601 Broad Street, Rome, Georgia 30161.

Any bids received thereafter will not be considered.

Bids will be publicly opened and read at the City of Rome Purchasing Department located at 601 Broad Street on the day and at the hour specified.

The purchaser may consider as non-responsive, any bid in which there is an alteration of, or departure from the bid form hereto attached.

The City of Rome will review and evaluate the RFP responses, and determine the firm that demonstrates the greatest capabilities and relevant experience, proposes a reasonable cost, and is the most advantageous in fulfilling the City's goals for this project. The City of Rome reserves the right to accept, reject, and/or negotiate any or all proposals as determined by them to be in the City's best interest. The bidder to whom award is made will be notified at the earliest possible date. The purchaser reserves the right to reject the bid of a bidder who has previously failed to perform properly or complete on time, contracts of a similar nature, or the bid of a bidder who, in the sole opinion and discretion of the purchaser is not in a position to perform the contract, or whose name appears on the United States Comptroller General's list of ineligible contractors.
Bids may be withdrawn by written or faxed request, provided such withdrawals are received prior to bid opening date.

NOTE: Unless stated on the bid form the bid submitted will assume all specifications will be met. Please note on the bid form all exceptions.

NOTICE TO BIDDERS

It is the sole responsibility of the bidder(s) to ensure that proposals reach the Purchasing Department on or before the closing date and time. The City of Rome shall not be held responsible for delays caused by any situation. Offers by telephone, facsimile, or email will not be accepted.

The City of Rome will not be responsible for late deliveries or delayed mail. The proposal opening time shall be strictly observed. Under no circumstances shall proposals delivered after the specified time be considered.

Failure to restrict contacts or discussion regarding this RFP to the City of Rome Purchasing Department will be considered a serious breach of process and may, at the sole discretion of the City of Rome, result in disqualifying the violating party's firm from further consideration in this RFP opportunity. Additionally, any unauthorized contact with members of the City Commission or City employees by a bidder or a bidder's representative concerning this proposal may result in the disqualification of the bidder.

The City of Rome reserves the right to accept or reject any and all proposals, to waive any irregularity in proposals received, to award the entire proposal to one contractor or to make awards by group or by line item whichever is in the best interest of the City of Rome. Additionally, the City of Rome may unilaterally terminate this contract in whole or in part, for its convenience, availability of unobligated funds, or because of failure of the bidder to fulfill the contract obligations in any respect.

SECTION 002113 – ADDITIONAL INSTRUCTIONS TO BIDDERS

1.1 INTENT

A. Intent of this Bid request is to obtain an offer to perform Work to complete the construction of a 8" PVC gravity sanitary sewer line, HDPE force main, sanitary sewer service laterals, 6' diameter precast wet well, sanitary sewer pumping station, package sanitary sewer pumping station, manholes, manhole frames and covers, connection to existing sanitary sewer system, access drive, erosion control, traffic control, all associated appurtenances, grouting and abandonment of existing sanitary sewer lines, and manhole decommissioning located at Horseleg Creek Road, Rome, Georgia 30161, for a Stipulated Price contract, according to Contract Documents.

1.2 WORK IDENTIFIED IN CONTRACT DOCUMENTS

A. Work to complete the construction of a 8" PVC gravity sanitary sewer line, HDPE force main, sanitary sewer service laterals, 6' diameter precast wet well, sanitary sewer pumping station, package sanitary sewer pumping station, manholes, manhole frames and covers, connection to existing sanitary sewer system, access drive, erosion control, traffic control, all associated appurtenances, grouting and abandonment of existing sanitary sewer lines, and manhole decommissioning.

B. Location: Horseleg Creek Road, Rome, Georgia, 30161

C. Land and Access:

1. Contract Documents identify land, rights-of-way, and easements for the Work to be accessed and performed.

1.3 CONTRACT TIME

A. Description:

1. Owner requires the Project to be substantially completed within **120** calendar days after the date when the Contract Times commence to run as dated in the Notice to Proceed and completed and ready for final payment within **150** calendar days after the date when the Contract Times commence to run as dated in the Notice to Proceed.

B. Time is of Essence:

1. Owner requires Work of this Contract to be completed as soon as possible.

1.4 DEFINITIONS

A. Bidding Documents: Contract Documents supplemented with Advertisement for Bids, Instructions to Bidders, Bid Form, Bid securities, and Technical Specifications.

B. Contract Documents: As defined in EJCDC C-700 - Standard General Conditions of the Construction Contract, Article 1, including issued Addenda.

C. Bid: Executed Bid Form and required attachments submitted according to Instructions to Bidders.

D. Bid Price / Sum: Monetary sum identified by Bidder in Bid Form.

1.5 CONTRACT DOCUMENTS IDENTIFICATION

A. Contract Documents are identified as Project No. 16120.04 (Owner Bid # 006-20), as prepared by InSite Engineering, LLC located at 5800 Feldspar Way, Hoover, Alabama 35244, and as identified in Project Manual.

1.6 AVAILABILITY OF DOCUMENTS

A. Bidding Documents may be obtained as indicated in Advertisement for Bids.

B. Purpose:

1. Bidding Documents are made available only for the purpose of obtaining offers for the Project.
2. Their use does not grant a license for other purposes.

1.7 EXAMINATION OF DOCUMENTS

A. Bidding Documents may be viewed at the office of InSite Engineering, LLC or Online within the plan library at www.insiteengineering.org and www.romefloyd.com.

B. Completeness:

1. Upon receipt of Bidding Documents, verify that documents are complete.
2. Notify Engineer if documents are incomplete.

C. Immediately notify Engineer upon finding discrepancies or omissions in Bidding Documents.

1.8 INQUIRIES AND ADDENDA

A. Direct questions in writing to Becky Smyth, at the office of City of Rome – Purchasing Department, at bsmyth@romega.us. It is the bidders responsibility to ensure the email is received.

B. Verbal answers are not binding on any party.

C. Submit questions not less than five days before date set for receipt of Bids.

D. Include resultant costs in Bid Price/Sum.

1.9 PRODUCT SUBSTITUTIONS

A. Where Bidding Documents stipulate particular products, substitution requests will be considered by Engineer up to 10 days before receipt of Bids.

B. With each substitution request, provide sufficient information for Engineer to determine acceptability of proposed products.

C. Comply with substitution request submittal requirements in Section 016000 - Product Requirements including use of Substitution Request Form.

D. Approvals:

1. When a request to substitute a product is made, Engineer may approve the substitution with Owners direction.
2. Approved substitutions will be identified by Addenda.

E. Changes in the Work:

1. In submitting substitutions to specified products, Bidders shall include changes required in the Work and changes to Contract Time, Contract Sum, and Contract Price to accommodate such approved substitutions in their Bid.
2. Later claims by the Bidder for an addition to the Contract Time or Contract Price because of changes in Work necessitated by use of substitutions will not be considered.

F. With each substitution request, provide sufficient information for Engineer to determine acceptability of proposed products.

G. Comply with substitution request submittal requirements in Section 016000 - Product Requirements including use of Substitution Request Form.

H. Provide complete information on required revisions to other Work to accommodate each substitution, the value of additions to or reductions from the Bid Price, including revisions to other Work.

I. Provide products as specified unless substitutions are submitted in this manner and subsequently accepted.

J. Approval to submit substitution requests prior to submission of Bids is not required.

1.10 SITE EXAMINATION

A. Examine Project Site before submitting a Bid.

B. Contact Engineer at following address and phone number to arrange date and time to visit Project Site:

1. Address: 5800 Feldspar Way, Hoover, Alabama 35244.
2. Telephone: 205-733-9696.

1.11 PREBID MEETING

A. A mandatory Pre-Bid Meeting will not be held. Each bidder can schedule a time to view the site and construction area through the office of the Engineer.

1.12 BIDDER QUALIFICATIONS

A. To demonstrate qualification for performing the Work of this Contract, Bidders may be requested to submit written evidence of previous experience and valid Utility Contractors License issued by the State of Georgia.

1.13 BIDDER PREQUALIFICATION

A. Bidder prequalification for this project is not required.

1.14 SUBCONTRACTORS

A. Owner reserves right to reject a proposed Subcontractor for reasonable cause.

1.15 SUBMISSION PROCEDURE

A. Bidders shall be solely responsible for delivery of Bids in manner and time prescribed.

B. Submit one copy of executed offer on provided Bid Forms, signed and sealed with required Bid Bond in a closed opaque envelope, and clearly identified with Bidder's name and address, Project name, General Contractors License Number, Utility Contractors License Number, and Owner's name on outside.

C. Improperly completed information, including irregularities in Bid bond, will be cause not to open Bid Form envelope and to declare Bid invalid or informal.

D. An abstract summary of submitted Bids will be made available to all Bidders following Bid opening.

1.16 BID INELIGIBILITY

A. Bids that are unsigned, improperly signed or sealed, conditional, illegible, and obscure, or Bids that contain arithmetical errors, erasures, alterations, or irregularities, may be declared unacceptable at Owner's discretion.

B. Bid Forms, Appendices, and enclosures that are improperly prepared may be declared unacceptable at Owner's discretion.

C. Failure to provide security deposit, bonds, or insurance requirements will invalidate Bid at Owner's discretion.

1.17 BID SECURITY

A. Bids shall be accompanied by Bid security as follows:

1. Bid bond in the amount of a maximum of $10,000 or of a sum no less than 5 percent of Bid Sum.

B. Endorse Bid bond in name of The City of Rome, Georgia. Signed and sealed by principal (Contractor) and surety.

C. Bid securities will be returned after delivery to Owner of required performance and payment bonds by accepted Bidder.

D. If accepted Bidder fails to execute the Agreement and indicated bonds within 15 days after Notice of Award, Notice of Award may be annulled and Bidder's Bid security will be forfeited.

E. Include cost of Bid security in Bid Sum/Price

F. After Bid has been accepted, Bid security will be returned to respective Bidders.

G. If no contract is awarded, Bid security will be returned.

1.18 PERFORMANCE ASSURANCE

A. Accepted Bidder: Provide performance and payment bond as described in Document 007314 - Supplementary Conditions - EJCDC

B. Include cost of performance assurance bonds in Bid Sum/Price. Separate payment will not be made.

1.19 INSURANCE

A. Provide an executed "Undertaking of Insurance" on Standard form provided by the insurance company, stating insurance company's intention to provide insurance to Bidder according to insurance requirements of Contract Documents.

1.20 BID FORM REQUIREMENTS

A. Complete requested information in Bid Form and Bid Form Supplements.

B. Refer to Document 007314 - Supplementary Conditions - EJCDC for inclusion of taxes, and tax-exempt products.

1.21 FEES FOR CHANGES IN THE WORK

A. Include in Bid Form the overhead and profit fees on Bidder's own Work and Work by Subcontractors, applicable for changes in the Work, whether additions to or deductions from the Work on which Bid Sum/Price is based.

B. Subcontract Work:

1. Include in Bid Form the fees proposed for subcontract Work for changes, both additions and deductions, in the Work.

1.22 BID FORM SIGNATURE

A. Sign Bid Form as follows:

1. Sole Proprietorship:

a. Signature of sole proprietor in presence of a witness who will also sign.
b. Include words "Sole Proprietor" under signature.
c. [**Affix seal.**]

2. Partnership:

a. Signature of each partner in presence of a witness who will also sign.
b. Include word "Partner" under each signature.
c. [**Affix seal to each signature.**]

3. Corporation:

a. Signature of at least one duly authorized signing officer.
b. Include officer's capacity under each signature.
c. Affix corporate seal.
d. If Bid is signed by officials other than president, secretary, or treasurer of company, submit a copy of bylaws or a resolution of board of directors authorizing them to do so, included with Bid Form in Bid envelope.

4. Joint Venture:

a. Signature of each party of joint venture under their respective seals in a manner appropriate to such party as described above, similar to requirements for partnerships.

1.23 ADDITIONAL BID INFORMATION

A. Complete and submit with Bid, Document 004300 - Procurement Form Supplements.

1. Appendix A - List of Subcontractors: Include names of all Subcontractors and portions of the Work each Subcontractor will perform.
2. Appendix B - List of Unit Prices: Include list of Unit Prices specifically requested by Contract Documents.
3. Appendix C - List of Alternates: Include cost variation to Bid Sum/Price applicable to Work described in Section 012000 - Price and Payment Procedures.
4. Appendix D - List of Separate Prices: Include list of separate prices as specifically requested in Contract Documents.

5. Appendix E - Cost Breakdown: Includes Bid sum/price segmented into portions as requested.
6. Appendix F - List of Supplementary Mechanical Information.
7. Appendix G - List of Supplementary Electrical Information.
8. Appendix H - List of Equipment.
9. Appendix I - List of Tax Rebate Items.

1.24 SELECTION AND AWARD OF ALTERNATES

A. Evaluation:

1. Bids will be evaluated on base Bid Price or Base Plus any Alternates.

1.25 BID OPENING

A. Description:

1. Bids will be opened publicly immediately after time for receipt of Bids.
2. Bidders may be present.

1.26 DURATION OF OFFER

A. Bids shall remain open to acceptance and shall be irrevocable for a period of **60** days after Bid closing date.

1.27 ACCEPTANCE OF OFFER

A. Owner reserves right to waive irregularities and to accept or reject any or all offers.

B. After acceptance by Owner, Engineer, on behalf of Owner, will issue to the accepted Bidder a written Notice of Award.

C. Notwithstanding delay in the preparation and execution of the Agreement, accepted Bidder shall be prepared, upon written Notice to Proceed, to commence Work within 30 days following receipt of official written order of Owner to proceed, or on date stipulated in such order.

D. Accepted Bidder shall assist and cooperate with Owner to prepare Agreement, and shall execute Agreement and return it to Owner within 15 days following its presentation.

END OF DOCUMENT 002113

This page intentionally left blank.

SECTION 004100 – BID SECURITY FORMS

1.1 BID FORM SUPPLEMENT

A. A completed bid bond form is required to be attached to the Bid Form.

1.2 BID BOND FORM

A. EJCDC Document C-430, "Bid Bond," is the recommended form for a bid bond. A bid bond acceptable to Owner, or other bid security as described in the Instructions to Bidders, is required to be attached to the Bid Form as a supplement.

B. A copy of the form is attached in these documents.

END OF SECTIONS 004100

This page intentionally left blank.

BID BOND

Any singular reference to Bidder, Surety, Owner or other party shall be considered plural where applicable.

BIDDER *(Name and Address)*:

SURETY *(Name, and Address of Principal Place of Business)*:

OWNER *(Name and Address)*:

BID

Bid Due Date:

Description *(Project Name— Include Location)*:

BOND

Bond Number:

Date:

Penal sum _____ $ _____

(Words) (Figures)

Surety and Bidder, intending to be legally bound hereby, subject to the terms set forth below, do each cause this Bid Bond to be duly executed by an authorized officer, agent, or representative.

BIDDER	**SURETY**
_____ (Seal)	_____ (Seal)
Bidder's Name and Corporate Seal	Surety's Name and Corporate Seal
By: _____	By: _____
Signature	Signature (Attach Power of Attorney)
_____	_____
Print Name	Print Name
_____	_____
Title	Title
Attest: _____	Attest: _____
Signature	Signature
Title	Title

Note: Addresses are to be used for giving any required notice.
Provide execution by any additional parties, such as joint venturers, if necessary.

1. Bidder and Surety, jointly and severally, bind themselves, their heirs, executors, administrators, successors, and assigns to pay to Owner upon default of Bidder the penal sum set forth on the face of this Bond. Payment of the penal sum is the extent of Bidder's and Surety's liability. Recovery of such penal sum under the terms of this Bond shall be Owner's sole and exclusive remedy upon default of Bidder.

2. Default of Bidder shall occur upon the failure of Bidder to deliver within the time required by the Bidding Documents (or any extension thereof agreed to in writing by Owner) the executed Agreement required by the Bidding Documents and any performance and payment bonds required by the Bidding Documents.

3. This obligation shall be null and void if:

3.1 Owner accepts Bidder's Bid and Bidder delivers within the time required by the Bidding Documents (or any extension thereof agreed to in writing by Owner) the executed Agreement required by the Bidding Documents and any performance and payment bonds required by the Bidding Documents, or

3.2 All Bids are rejected by Owner, or

3.3 Owner fails to issue a Notice of Award to Bidder within the time specified in the Bidding Documents (or any extension thereof agreed to in writing by Bidder and, if applicable, consented to by Surety when required by Paragraph 5 hereof).

4. Payment under this Bond will be due and payable upon default of Bidder and within 30 calendar days after receipt by Bidder and Surety of written notice of default from Owner, which notice will be given with reasonable promptness, identifying this Bond and the Project and including a statement of the amount due.

5. Surety waives notice of any and all defenses based on or arising out of any time extension to issue Notice of Award agreed to in writing by Owner and Bidder, provided that the total time for issuing Notice of Award including extensions shall not in the aggregate exceed 120 days from the Bid due date without Surety's written consent.

6. No suit or action shall be commenced under this Bond prior to 30 calendar days after the notice of default required in Paragraph 4 above is received by Bidder and Surety and in no case later than one year after the Bid due date.

7. Any suit or action under this Bond shall be commenced only in a court of competent jurisdiction located in the state in which the Project is located.

8. Notices required hereunder shall be in writing and sent to Bidder and Surety at their respective addresses shown on the face of this Bond. Such notices may be sent by personal delivery, commercial courier, or by United States Registered or Certified Mail, return receipt requested, postage pre-paid, and shall be deemed to be effective upon receipt by the party concerned.

9. Surety shall cause to be attached to this Bond a current and effective Power of Attorney evidencing the authority of the officer, agent, or representative who executed this Bond on behalf of Surety to execute, seal, and deliver such Bond and bind the Surety thereby.

10. This Bond is intended to conform to all applicable statutory requirements. Any applicable requirement of any applicable statute that has been omitted from this Bond shall be deemed to be included herein as if set forth at length. If any provision of this Bond conflicts with any applicable statute, then the provision of said statute shall govern and the remainder of this Bond that is not in conflict therewith shall continue in full force and effect.

11. The term "Bid" as used herein includes a Bid, offer, or proposal as applicable.

BID FORM

TO: City of Rome – Purchasing Department
ATTN: BECKY SMYTH
601 Broad Street
Rome, Georgia 30161

BID PKG. "006-20 Horseleg Creek Sanitary Sewer Pump Station Addition"

Base Price - $_____

Alternate Price - $_____

All bids submitted shall be subject to acceptance or rejection and the City of Rome specifically reserves the right to accept or reject any or all bids, to waive any technicalities and formalities in the bidding.

_____	_____
Name of Individual, Partner or Corporation	Company
_____	_____
Title	Address
_____	_____
Authorized Signature	City, State, Zip Code

_____
Company phone number

Please attach contact's business card:

This page intentionally left blank.

SECTION 004143 - BID FORM - UNIT PRICE (SINGLE-PRIME CONTRACT)

1.1 BID INFORMATION

A. To: City of Rome, Georgia

B. Project Name: Horseleg Creek Sanitary Sewer Pump Station Addition

C. InSite Project No.: 16120.04

D. Owner Bid # 006-20

E. Date:

F. Submitted by:

1. Name: _____

2. Address: _____

1.2 OFFER

A. Having examined the Place of the Work and all matters referred to in the Instructions to Bidders and the Contract Documents prepared by the InSite Engineering, LLC for the above-referenced Project, we, the undersigned, hereby offer to enter into a Contract to perform the Work for the Unit Prices listed in this Bid Form in lawful money of the United States of America.

B. We have included the Bid security as required by the Instructions to Bidders.

C. All applicable federal taxes are included and State of Georgia, Floyd County, and City of Rome taxes are included in the Unit Prices.

D. All Allowances described in Section 012000 - Price and Payment Procedures are included in the Unit Prices.

1.3 ACCEPTANCE

A. This offer shall be open to acceptance and is irrevocable for 60 days from the Bid closing date.

B. If this Bid is accepted by the Owner within the time period stated above, we will:

1. Execute the Agreement within 15 days of receipt of Notice of Award.
2. Furnish the required bonds within 15 days of receipt of Notice of Award.
3. Commence Work within 30 days after written Notice to Proceed.

C. If this Bid is accepted within the indicated time, and we fail to commence the Work or we fail to provide the required bonds, the Bid security shall be forfeited as damages to the Owner by reason of our failure, limited in amount to the lesser of the face value of the Bid security or the difference between this Bid and the Bid upon which a Contract is signed.

D. In the event our Bid is not accepted within the time stated above, the required Bid security will be returned to the undersigned, according to the provisions of the Instructions to Bidders, unless a mutually satisfactory arrangement is made for its retention and validity for an extended period of time.

1.4 CONTRACT TIME

A. If this Bid is accepted, we will:
1. Owner requires the Project to be substantially completed within **120** calendar days after the date when the Contract Times commence to run as dated in the Notice to Proceed and completed and ready for final payment within **150** calendar days after the date when the Contract Times commence to run as dated in the Notice to Proceed.

1.5 UNIT PRICES

A. Following are Unit Prices for specific portions of the Work as listed:

BASE BID

Item	Description	Unit	Units	Unit Price	Total
1	8” PVC SDR-26, Gravity Sewer, 6’- 12’ Cut, Furnished and Installed (Per Linear Foot)	920	LF		
2	4” HDPE, DR 11 (DIPS) Sanitary Sewer Force Main, Furnished and Installed (Per Linear Foot)	650	LF		
3	2” HDPE, DR 11 (DIPS) Sanitary Sewer Force Main, Furnished and Installed (Per Linear Foot)	350	LF		
4	4" PVC, SCH 40 Sanitary Sewer Service Lateral and Clean Outs, Furnished and Installed (Per Linear Foot)	630	LF		
5	48” Diameter Precast Concrete Manhole Base Sections, Furnished and Installed (Per Vertical Foot)	32	VLF		
6	48” Diameter Precast Concrete Manhole Riser and Cone Sections, Furnished and Installed (Per Vertical Foot)	73	VLF		
7	Manhole Frames and Bolt Down Covers, Furnished and installed (Per Each)	2	EA		
8	Manhole Frames and Covers, Furnished and Installed (Per Each)	6	EA		
9	1” Automatic Air Release Valve Assembly with 20’ Length of Level Pipe, Furnished and Installed, (Per Each)	1	EA		

10	Above Ground Sanitary Sewer Pumping Station No. 1 – Pumps, Stairs and Walkways, Pre-Cast Wet Well, Water-proof Access Hatch, Concrete, Piping, Fittings, Pipe Supports, Controls, Power, Generator, Automatic Transfer Switch, Fencing, Earthwork, etc. and all associated appurtenances inside of and including the Fence, Gates, and Landscaping, Furnished and Installed (Lump Sum)	1	LS		
11	Package Sanitary Sewer Pumping Station No. 2 – Pumps, Fiberglass Wet Well, Access Hatch, Concrete, Piping, Fittings, Pipe Supports, Controls, Power, Earthwork, etc. and all associated appurtenances, Furnished and Installed (Lump Sum)	1	LS		
12	Connection to Existing Sanitary Sewer System Manhole (Per Each)	2	EA		
13	12' Wide Gravel Access Drive (Stone to Match in-kind Material), 3" Depth, Furnished and Installed (Per Square Yard)	295	SY		
14	Manhole Decommission, Furnished and Installed (Per Each)	4	EA		
15	Grout Fill and Abandon In Place, Existing 8" Sanitary Sewer Line, Furnished and Installed (Per Linear Foot)	1,750	LF		
16	Asphalt Driveway Trench Repair – Full-Depth Build-Up, Furnished and Installed (Per Square Yard)	130	SY		
17	Asphalt Driveway Overlay – Wearing Surface, Furnished and Installed (Per Square Yard)	475	SY		
18	1" Type "K" Copper Tubing Water Service, Furnished and Installed (Lump Sum)	1	LS		
19	Erosion Control (Lump Sum)	1	LS		
20	Traffic Control (Lump Sum)	1	LS		
21	Allowance #1 (Unforeseen Conflicts)	1	ALLOW	$15,000	$15,000

Total Base Bid _____

ALTERNATE BID

Item	Description	Unit	Units	Unit Price	Total
A-1	Epoxy Lining of 6' Diameter Wet Well	1	LS		

Total Alternate Bid _____

1.6 UNIT PRICES

A. Pipe (Bid Items No. 1, No. 2, No. 3, and No. 4):

1. Basis of Measurement: Per linear foot for each size, depth and type of pipe and fitting in terms of horizontal lengths of pipe and fitting installed in place as measured along the centerline with no deductions for fittings.
2. Basis of Payment: Such payment shall be full compensation for the installation of pipe, fittings, excavation, stone bedding, jointing materials, labor, testing, etc. including all other work necessary for and incidental to completion of the work.

B. 48” Diameter Precast Concrete Manhole Base Sections (Bid Item No. 5):

1. Basis of Measurement: The quantities of precast concrete manholes for which payment will be allowed, shall be expressed in vertical linear feet for each size of manhole.
2. Basis of Payment: The overall manhole base section depth shall be measured from the top of the base section to the invert of outlet pipe and shall include manhole steps, rubber boot, external sealing sleeve, excavation, backfill, stone bedding, and all other items of work necessary and incidental to completion of the work.

C. 48” Diameter Precast Concrete Manhole Riser and Cone Sections (Bid Item No. 6)

1. Basis of Measurement: quantities of precast concrete manholes for which payment will be allowed, shall be expressed in vertical linear feet for each size of manhole.
2. Basis of Payment: The overall manhole depth shall be measured from finished grade ring elevation to the top of the base section and shall include manhole steps, rubber boot, external sealing sleeve, excavation, backfill, stone bedding, and all other items of work necessary and incidental to completion of the work.

D. Manhole Frames and Bolt Down Covers (Bid Item No. 7):

1. Basis of Measurement: By each.
2. Basis of Payment: Such payment shall be full compensation for the furnishing and installation of each Manhole Frame and Bolt Down Cover, jointing materials, labor, testing, etc. including all other work necessary for and incidental to completion of the work.

E. Manhole Frames and Covers (Bid Item No. 8):

1. Basis of Measurement: By each.
2. Basis of Payment: Such payment shall be full compensation for the furnishing and installation of each Manhole Frame and Cover, jointing materials, labor, testing, etc. including all other work necessary for and incidental to completion of the work.

F. 1” Automatic Air Release Valve Assembly (Bid Item No. 9):

1. Basis of Measurement: By each.
2. Basis of Payment: Such payment shall be full compensation for the installation of 1” automatic air release valve with twenty foot length of level pipe, concrete manhole, lid, stone bedding/backfill, jointing materials, labor, testing, etc. including all other work necessary for and incidental to completion of the work

G. Above Ground Sanitary Sewer Pumping Station No. 1 (Bid Item No. 10):

1. Basis of Measurement: By lump sum.
2. Basis of Payment: Includes installation of the pumps, stairs and walkways, pre-cast wet well, waterproof access hatch, concrete, piping, fittings, pipe supports, controls, electrical, power, generator, automatic transfer switch, fencing, entrance gates, earthwork, landscaping and all other associated appurtenances, accessories, tests, excavation, stone bedding, and backfill and disposal of the excavated materials in the manner herein provided.

H. Package Sanitary Sewer Pumping Station No. 2 (Bid Item No. 11):

1. Basis of Measurement: By lump sum.
2. Basis of Payment: Includes installation of the pumps, fiberglass wet well, access hatch, concrete, piping, fittings, pipe supports, controls, electrical, power, earthwork, and all other associated appurtenances, accessories, tests, excavation, stone bedding, and backfill and disposal of the excavated materials in the manner herein provided.

I. Connections to Existing Sanitary Sewer System Manhole (Bid Item No. 12)

1. Basis of Measurement: By each.
2. Basis of Payment: Such payment shall be full compensation for the installation of connection to existing sanitary sewer system manhole, including appurtenances, excavation, backfill and disposal of the excavated materials in the manner herein provided, including all other work necessary for and incidental to completion of the work.

J. 12’ Wide Gravel Access Drive (Match Existing Driveway) (Bid Item No. 13)

1. Basis of Measurement: Per square yard.
2. Basis of Payment: Such payment shall be full compensation for the installation of 16’ wide access drive (thickness shall be NO less than 3” thick and shall match stone type referenced in the drawings) and disposal of the excavated materials in the manner herein provided, including all other work necessary for and incidental to completion of the work

K. Manhole Decommission (Bid Item No. 14)

1. Basis of Measurement: Per each.
2. Basis of Payment: Such payment shall be full compensation for the decommissioning of existing sanitary sewer manholes including all other work necessary for and incidental to completion of the work. g All sanitary sewer materials, debris, etc. from the sanitary sewer manhole decommissioning to be disposed of properly and in conformance with all governing regulations. All disturbed areas shall be returned to a stabilized and maintainable area.

L. Grout Fill and Abandon In Place, Existing 8” Sanitary Sewer Line (Bid Item No. 15)

1. Basis of Measurement: Per linear foot.
2. Basis of Payment: Such payment shall be full compensation for the grout filling and abandonment of the existing 8” sanitary sewer line including all other work necessary for and incidental to completion of the work. All sanitary sewer materials, debris, etc. from

the work being performed are to be disposed of properly and in conformance with all governing regulations. All disturbed areas shall be returned to a stabilized and maintainable area.

M. Asphalt Driveway Trench Repair – Full-Depth Build-Up (Bid Item No. 16)

1. Basis of Measurement: Per Square Yard in terms of the numbers actually installed.
2. Basis of Payment: Such payment shall be full compensation for the installation of paving as replaced, patched, and/or repaired. Including the performance of all work items necessary for and incidental to completion of the work and for the furnishing of all labor, tools, equipment, and incidentals necessary and appurtenant to the completion of these items to the complete satisfaction of the governing authority. See detail for thickness guideline. The maximum width paid on driveway trench repair shall be 10-15 feet wide, depending on the depth of the cut, by the length of the trench.

N. Asphalt Driveway Overlay – Wearing Surface (Bid Item No. 17)

1. Basis of Measurement: Per Square Yard in terms of the numbers actually installed.
2. Basis of Payment: Such payment shall be full compensation for the installation of wearing surface overlay. Including the performance of all work items necessary for and incidental to completion of the work and for the furnishing of all labor, tools, equipment, and incidentals necessary and appurtenant to the completion of these items, to the complete satisfaction of the governing authority. Asphalt milling shall be considered a subsidiary obligation to asphalt driveway overlay. See detail for thickness guideline.

O. 1" Type "K" Copper Tubing Water Service (Bid Item No. 18)

1. Basis of Measurement: By lump sum.
2. Basis of Payment: Such payment shall be full compensation for the installation of water service, fittings, excavation, stone bedding, jointing materials, labor, testing, etc. including all other work necessary for and incidental to completion of the work.

P. Erosion Control (Bid Item No. 19)

1. Basis of Measurement: By lump sum.
2. Basis of Payment: Such payment shall be full compensation for the installation of erosion control measures, including appurtenances, excavation, backfill, etc., including all other work necessary for and incidental to completion of the work.

Q. Traffic Control (Bid Item No. 20)

1. Basis of Measurement: Per Lump Sum.
2. Basis of Payment: Such payment shall be full compensation for the installation, maintenance and removal in the manner herein provided, including all other work necessary for and incidental to completion of the work

R. Unforeseen Conflict Allowance (Bid Item No. 21)

1. Include the stipulated sum of $15,000 for unforeseen conflict arising.
2. The bid item includes an allowance for unforeseen conflicts, which may arise during construction. Note that "ALL claims against the allowances must be approved by the

City of Rome". Any additional items required for which a unit price is included on the bid form will be paid for under the appropriate unit price and not out of the allowance.

S. Epoxy Lining of 6' Diameter Concrete Wet Well (Alternate Bid Item No. A-1)

1. Basis of Measurement: Per Lump Sum.
2. Basis of Payment: Such payment shall be full compensation for the installation of a spray-applied 100% solids epoxy monolithic surfacing system for use in coating new or existing wet wells and other structures. Additionally, the payment shall be full compensation for work, materials, equipment and tools including specially developed application equipment as required for installation of a field applied unique monolithic interior surfacing system and all other work necessary for and incidental to completion of the work

1.7 ADDENDA

A. Following Addenda have been received, and the modifications to the Bid Documents noted below have been considered and all costs are included in the Bid Sum/Price

1. Addendum No. ....., dated .....
2. Addendum No. ....., dated .....
3. Other:_____, dated ……

1.8 APPENDICES

A. Following documents are attached to and made a condition of the Bid:

1. Bid security in amount of _____
2. Bidder's qualifications statement and supporting data.
3. Document 004300 - Procurement Form Supplements, including all items required by Instructions to Bidders:

1.9 BID FORM SIGNATURES

A. Full Name of Bidder: .....

B. Hereunto affixed in the presence of .....

C. Authorized Signing Officer and Title: .....

D. [**Seal: .....**]

E. Address for giving Notice: ……...

END OF DOCUMENT 004143

This page intentionally left blank.

BIDDERS DECLARATION

The bidder understands, agrees and warrants:

- That the bidder has carefully read and fully understands the full scope of the specifications.
- That the bidder has the capability to successfully undertake and complete the responsibilities and obligations in said specifications.
- That the bidder has liability insurance and a declaration of insurance form is included in the bid package.
- That this bid may be withdrawn by requesting such withdrawal in writing at any time prior to **March 10, 2020 at 10:00 a.m.** but may not be withdrawn after such date and time.
- That the City of Rome reserves the right to reject any or all bids and to accept that bid which will, in its opinion, best serve the public interest. The City of Rome reserves the right to waive any technicalities and formalities in the bidding.
- That by submission of this bid the bidder acknowledges that the City of Rome has the right to make any inquiry or investigation it deems appropriate to substantiate or supplement information supplied by the bidder.
- If a partnership, a general partner must sign.
- If a corporation, the authorized corporate officer(s) must sign and the corporate seal must be affixed to this bid.

BIDDER:

_____ _____
Name Title

_____ _____
Name Title

AFFIX CORPORATE SEAL (If Applicable)

CERTIFICATE OF NON-DISCRIMINATION

In connection with the performance of work under this contract, the bidder agrees as follows:

The bidder agrees not to discriminate against any employee or applicant for employment because of race, creed, color, sex, national origin, ancestry or disability. The vendor shall take affirmative action to insure that employees are treated without regard to their race, creed, color, sex, national origin, ancestry or disability. Such action shall include, but not be limited to the following: employment, upgrading, demotion, transfer, recruiting or recruitment, advertising, lay-off or termination, rates of pay or other compensation and selection for training, including apprenticeship.

In the event of the bidder's non-compliance with this non-discrimination clause, the contract may be canceled or terminated by the City of Rome. The bidders may be declared, by the City of Rome, ineligible for further contracts with the City of Rome until satisfactory proof of intent to comply shall be made by the vendor.

The bidder agrees to include this non-discrimination clause in any sub-contracts connected with the performance of this agreement.

_____

BIDDER

_____

SIGNATURE

_____

TITLE

NON-COLLUSION AFFIDAVIT

The following affidavit is to accompany the bid:

STATE OF

COUNTY OF

Owner, Partner or Officer of Firm

Company Name, Address, City and State

Being of lawful age, being first duly sworn, on oath says that he/she is the agent authorized by the bidder to submit the attached bid. Affidavit further states as bidder, that they have not been a party to any collusion among bidders in restraint of competition by agreement to bid at a fixed price or to refrain from bidding; or with any office of the City of Rome or any of their employees as to quantity, quality or price in the prospective contract; or any discussion between bidders and any official of the City of Rome or any of their employees concerning exchange of money or other things of value for special consideration in submitting a sealed bid for:

FIRM NAME _____

SIGNATURE _____

TITLE _____

Subscribed and sworn to before me this_____ day of _____ 20_____

_____

NOTARY PUBLIC

STATE OF GEORGIA PROMPT PAY ACT AFFIDAVIT

THIS AFFIDAVIT IS TO ACCOMPANY THE BID

GEORGIA PROMPT PAY ACT: The Georgia Prompt Pay Act was enacted by the General Assembly in 1994 and took effect January 1, 1995. This act requires owners to pay contractors within 15 days of receipt of a pay request by the owner or the owner's representative. If payment is not made the owner shall pay the contractor 1% per month interest on the delayed payment. Additionally, the contractor must pay subcontractors within 15 days of receipt of payment from the owner.

This Act is Code Section 13-11-1 (Georgia Laws of 1994, p. 1398 par. 4)

Firm Name: _____

Signature: _____

Title: _____

Subscribed and Sworn to before me this_____ day of _____, 20_____

_____
Notary Public

Form **W-9**
(Rev. December 2014)
Department of the Treasury
Internal Revenue Service

Request for Taxpayer Identification Number and Certification

Give Form to the requester. Do not send to the IRS.

Print or type
See Specific Instructions on page 2.

1 Name (as shown on your income tax return). Name is required on this line; do not leave this line blank.

2 Business name/disregarded entity name, if different from above

3 Check appropriate box for federal tax classification; check only **one** of the following seven boxes:
☐ Individual/sole proprietor or single-member LLC ☐ C Corporation ☐ S Corporation ☐ Partnership ☐ Trust/estate
☐ Limited liability company. Enter the tax classification (C=C corporation, S=S corporation, P=partnership) ▶
Note. For a single-member LLC that is disregarded, do not check LLC; check the appropriate box in the line above for the tax classification of the single-member owner.
☐ Other (see instructions) ▶

4 Exemptions (codes apply only to certain entities, not individuals; see instructions on page 3):
Exempt payee code (if any)
Exemption from FATCA reporting code (if any)
(Applies to accounts maintained outside the U.S.)

5 Address (number, street, and apt. or suite no.)

Requester's name and address (optional)

6 City, state, and ZIP code

7 List account number(s) here (optional)

Part I Taxpayer Identification Number (TIN)

Enter your TIN in the appropriate box. The TIN provided must match the name given on line 1 to avoid backup withholding. For individuals, this is generally your social security number (SSN). However, for a resident alien, sole proprietor, or disregarded entity, see the Part I instructions on page 3. For other entities, it is your employer identification number (EIN). If you do not have a number, see *How to get a TIN* on page 3.

Note. If the account is in more than one name, see the instructions for line 1 and the chart on page 4 for guidelines on whose number to enter.

Social security number
☐☐☐ – ☐☐ – ☐☐☐☐

or

Employer identification number
☐☐ – ☐☐☐☐☐☐☐

Part II Certification

Under penalties of perjury, I certify that:

1. The number shown on this form is my correct taxpayer identification number (or I am waiting for a number to be issued to me); and
2. I am not subject to backup withholding because: (a) I am exempt from backup withholding, or (b) I have not been notified by the Internal Revenue Service (IRS) that I am subject to backup withholding as a result of a failure to report all interest or dividends, or (c) the IRS has notified me that I am no longer subject to backup withholding; and
3. I am a U.S. citizen or other U.S. person (defined below); and
4. The FATCA code(s) entered on this form (if any) indicating that I am exempt from FATCA reporting is correct.

Certification instructions. You must cross out item 2 above if you have been notified by the IRS that you are currently subject to backup withholding because you have failed to report all interest and dividends on your tax return. For real estate transactions, item 2 does not apply. For mortgage interest paid, acquisition or abandonment of secured property, cancellation of debt, contributions to an individual retirement arrangement (IRA), and generally, payments other than interest and dividends, you are not required to sign the certification, but you must provide your correct TIN. See the instructions on page 3.

Sign Here **Signature of U.S. person ▶** **Date ▶**

General Instructions

Section references are to the Internal Revenue Code unless otherwise noted.

Future developments. Information about developments affecting Form W-9 (such as legislation enacted after we release it) is at *www.irs.gov/fw9*.

Purpose of Form

An individual or entity (Form W-9 requester) who is required to file an information return with the IRS must obtain your correct taxpayer identification number (TIN) which may be your social security number (SSN), individual taxpayer identification number (ITIN), adoption taxpayer identification number (ATIN), or employer identification number (EIN), to report on an information return the amount paid to you, or other amount reportable on an information return. Examples of information returns include, but are not limited to, the following:

- Form 1099-INT (interest earned or paid)
- Form 1099-DIV (dividends, including those from stocks or mutual funds)
- Form 1099-MISC (various types of income, prizes, awards, or gross proceeds)
- Form 1099-B (stock or mutual fund sales and certain other transactions by brokers)
- Form 1099-S (proceeds from real estate transactions)
- Form 1099-K (merchant card and third party network transactions)
- Form 1098 (home mortgage interest), 1098-E (student loan interest), 1098-T (tuition)
- Form 1099-C (canceled debt)
- Form 1099-A (acquisition or abandonment of secured property)

Use Form W-9 only if you are a U.S. person (including a resident alien), to provide your correct TIN.

If you do not return Form W-9 to the requester with a TIN, you might be subject to backup withholding. See *What is backup withholding?* on page 2.

By signing the filled-out form, you:

1. Certify that the TIN you are giving is correct (or you are waiting for a number to be issued),

2. Certify that you are not subject to backup withholding, or

3. Claim exemption from backup withholding if you are a U.S. exempt payee. If applicable, you are also certifying that as a U.S. person, your allocable share of any partnership income from a U.S. trade or business is not subject to the withholding tax on foreign partners' share of effectively connected income, and

4. Certify that FATCA code(s) entered on this form (if any) indicating that you are exempt from the FATCA reporting, is correct. See *What is FATCA reporting?* on page 2 for further information.

CITY OF ROME

DRUG-FREE WORKPLACE CERTIFICATE

By signature on this certificate, the Bidder certifies that the provisions of O.C.G.A. Section 50-24-1 through 50-24-6 related to the "Drug-Free Workplace Act" will be complied with in full. The Bidder further certifies that:

1. A drug-free workplace will be provided for the Bidder's employees during the performance of the contract; and

2. Each contractor who hires a subcontractor to work in a drug-free workplace shall secure from that subcontractor the following written certification: "As part of the subcontracting agreement with (contractor's name), (subcontractor's name) certifies to the contractor that a drug-free workplace will be provided for the subcontractor's employees during the performance of this contract pursuant to O.C.G.A. Section 50-24-3(b)(7)."

By signature on this certificate, the Bidder further certifies that it will not engage in the unlawful manufacture, sale, distribution, dispensation, possession, or use of a controlled substance or marijuana during the performance of the contract.

Bidder: _____

By: _____

Name Printed: _____

Title: _____

Date: _____

CITY OF ROME, GEORGIA
E-VERIFY COMPLIANCE AFFIDAVIT

By executing this affidavit, the undersigned contractor verifies its compliance with O.C.G.A. § 13-10-91, stating affirmatively that the individual, firm or corporation which is engaged in the physical performance of services on behalf of the City of Rome, Georgia has registered with, is authorized to use and uses the federal work authorization program commonly known as E-Verify, or any subsequent replacement program, in accordance with the applicable provisions and deadlines established in O.C.G.A. § 13-10-91. Furthermore, the undersigned contractor will continue to use the federal work authorization program throughout the contract period and the undersigned contractor will contract for the physical performance of services in satisfaction of such contract only with subcontractors who present an affidavit to the contractor with the information required by O.C.G.A, § 13-10-91 (b). Contractor hereby attests that its federal work authorization user identification number and date of authorization are as follows:

_____
Federal Work Authorization User Identification number
(Not Required if Less than 10 Employees)

_____
Signature (if less than 10 employees)

_____
Date of Authorization

_____
Name of Contractor

_____
Name of Project

_____
Name of Public Employer

I hereby declare under penalty of perjury that the foregoing is true and correct.

Executed on _____, ____, 20____ in _____(city) _____ (state).

_____
Signature of Authorized Officer or Agent

_____
Printed Name and Title of Authorized Officer or Agent

SUBSCRIBED AND SWORN BEFORE ME
ON THIS THE _____ DAY OF _____, 20_____

_____
NOTARY PUBLIC
My Commission Expires:

CITY OF ROME, GEORGIA

SAVE COMPLIANCE AFFIDAVIT
O.C.G.A § 50-36-1(e) (2) Affidavit

By executing this affidavit under oath, as an applicant for a (n) Contract or Services, as referenced O.C.G.A. C. § 50-36-1, from the City of Rome, Georgia, the undersigned applicant verifies one of the following with respect to my application for a public benefit:

1) _____ I am a United State citizen.

2) _____ I am a legal permanent resident of the United States

3) _____ I am a qualified alien or non-immigrant under the Federal Immigration and Nationality Act with an alien number issued by the Department of Homeland Security or other federal immigration agency.

My alien number issued by the Department of Homeland Security or other federal immigration agency is: _____.

The undersigned applicant also hereby verifies that he or she is 18 years of age or older and has provided at least one secure and verifiable document, as required by O.C.G.A. § 50-36-1(e) (1), with this affidavit.

The secure and verifiable document provided with this affidavit can best be classified as:
_____.

In making the above representation under oath, I understand that any person who knowingly and willfully makes a false, fictitious, or fraudulent statement or representation in an affidavit shall be guilty of a violation of O.C.G.A. § 16-10-20, and face criminal penalties as allowed by such criminal statute.

Executed in _____ (city), _____ (state).

_____
Signature of Applicant

_____ Printed Name of Applicant

SUBSCRIBED AND SWORN

BEFORE ME ON THIS THE

_____DAY OF _____, 20_____

_____
NOTARY PUBLIC
My Commission Expires:

SECTION 004300 - PROCUREMENT FORM SUPPLEMENTS

1.1 PROJECT INFORMATION

A. To: The City of Rome, Georgia

B. Project Name: Horseleg Creek Sanitary Sewer Pump Station Addition

C. InSite Project No.: 16120.04

D. Owner Bid # 006-20

E. Date: .....

F. Submitted by: .....

G. Full name and address: .....

H. According to Document 002113 - Instructions to Bidders] and Document 004113 - Bid Form – Stipulated Sum (Single-Prime Contract), we include the Appendices to Bid Form Supplements listed below.

1. The information provided shall be considered an integral part of the Bid Form.
2. Following Appendices are attached to this Document:

   a. Appendix A - List of Subcontractors: Include names of all Subcontractors and portions of the Work each Subcontractor will perform.
   b. Appendix B - List of Unit Prices: Include list of Unit Prices specifically requested by Contract Documents.
   c. Appendix C - List of Alternates: Include cost variation to Bid Sum/Price applicable to the Work as described in Section 012000 - Price and Payment Procedures.
   d. Appendix D - List of Separate Prices: Include list of separate prices as specifically requested in Contract Documents.
   e. Appendix E - Cost Breakdown: Includes Bid Sum/Price segmented into portions as requested.
   f. Appendix F - List of Supplementary Mechanical Information. If Applicable.
   g. Appendix G - List of Supplementary Electrical Information. If Applicable.
   h. Appendix H - List of Equipment. If Applicable.
   i. Appendix I - List of Tax Rebate Items. If Applicable.

1.2 BID FORM SUPPLEMENT SIGNATURES

A. The Corporate Seal of.....

B. (Bidder - print the full name of your firm) ……..

C. was hereunto affixed in the presence of .....

D. (Authorized signing officer and title) …….

E. (Seal) .....

F. (Authorized signing officer and title): ……

G. (Seal) .....

1.3 APPENDIX A - LIST OF SUBCONTRACTORS

A. The list of Subcontractors submitted below is an integral part of the Bid Form and is referenced in the Bid submitted by:

1. (Bidder) .....
2. (Sub)……..
3. (Sub)……..
4. (Sub)……..
5. (Sub)……..
6. (Sub)……..

B. Following work will be performed (or provided) by Subcontractors and coordinated by us:
1. Work……By……..
2. Work……By……..
3. Work……By……..
4. Work……By……..

1.4 APPENDIX B - LIST OF UNIT PRICES

A. Following list of Unit Prices is an integral part of the Bid Form and is referenced in the Bid submitted by:

1. (Bidder) .....
2. To: The City of Rome, Georgia
3. Dated .....

B. Following Unit Prices are for specific portions of the Work as listed and are applicable to authorized variations from the Contract Documents:
1. See Bid Form

1.5 APPENDIX C - LIST OF ALTERNATES

A. Following list of alternates is an integral part of the Bid Form and is referenced in the Bid submitted by:

1. (Bidder) .....
2. To: The City of Rome, Georgia
3. Dated .....
4. Alternate……..

B. Following amounts shall be added to or deducted from the Bid Sum/Price. Refer to Schedule of Alternates in Section 012000 - Price and Payment Procedures for description of alternates.

1. Alternate No…….
2. Add Value. ……

1.6 APPENDIX D - LIST OF SEPARATE PRICES
1. SEE BID FORM

1.7 APPENDIX E - COST BREAKDOWN
1. SEE BID FORM.

1.8 APPENDIX F - LIST OF SUPPLEMENTARY MECHANICAL INFORMATION
1. N/A

1.9 APPENDIX G - LIST OF SUPPLEMENTARY ELECTRICAL INFORMATION
1. N/A

1.10 APPENDIX H - LIST OF EQUIPMENT
1. N/A

1.11 APPENDIX I - LIST OF TAX REBATE ITEMS
1. N/A

END OF DOCUMENT 004300

This page intentionally left blank.

SECTION 005213.12 - AGREEMENT FORM - EJCDC STIPULATED SUM (SINGLE-PRIME CONTRACT)

1.1 AGREEMENT

A. Basis of Agreement between Owner and Contractor: EJCDC C-520 - Agreement between Owner and Contractor for Construction Contract (Stipulated Price).

END OF DOCUMENT 005213.12

This page intentionally left blank.

AGREEMENT
BETWEEN OWNER AND CONTRACTOR
FOR CONSTRUCTION CONTRACT (STIPULATED PRICE)

THIS AGREEMENT is by and between The City of Rome, Georgia ("Owner") and _____ ("Contractor").

Owner and Contractor hereby agree as follows:

ARTICLE 1 – WORK

1.01 Contractor shall complete all Work as specified or indicated in the Contract Documents. The Work is generally described as follows:

ARTICLE 2 – THE PROJECT

2.01 The Project, of which the Work under the Contract Documents is a part, is generally described as follows:

THE CONSTRUCTION OF A 8" PVC GRAVITY SANITARY SEWER LINE, HDPE FORCE MAIN, SANITARY SEWER SERVICE LATERALS, 6' DIAMETER PRECAST WET WELL, SANITARY SEWER PUMPING STATION, PACKAGE SANITARY SEWER PUMPING STATION, MANHOLES, MANHOLE FRAMES AND COVERS, CONNECTION TO EXISTING SANITARY SEWER SYSTEM, ACCESS DRIVE, EROSION CONTROL, TRAFFIC CONTROL, ALL ASSOCIATED APPURTENANCES, GROUTING AND ABANDONMENT OF EXISTING SANITARY SEWER LINES, AND MANHOLE DECOMMISSIONING LOCATED AT HORSELEG CREEK ROAD, ROME, GEORGIA 30161.

ARTICLE 3 – ENGINEER

3.01 The part of the Project that pertains to the Work has been designed by InSite Engineering, LLC.

3.02 The Owner has retained InSite Engineering, LLC ("Engineer") to act as Owner's representative, assume all duties and responsibilities, and have the rights and authority assigned to Engineer in the Contract Documents in connection with the completion of the Work in accordance with the Contract Documents.

ARTICLE 4 – CONTRACT TIMES

4.01 *Time of the Essence*

A. All time limits for Milestones, if any, Substantial Completion, and completion and readiness for final payment as stated in the Contract Documents are of the essence of the Contract.

4.02 *Contract Times: Days*

A. The Work will be substantially completed within **120** days after the date when the Contract Times commence to run as provided in Paragraph 4.01 of the General Conditions, and completed and ready for final payment in accordance with Paragraph 15.06 of the General Conditions within **150** days after the date when the Contract Times commence to run.

Copyright © 2013 National Society of Professional Engineers, American Council of Engineering Companies, and American Society of Civil Engineers. All rights reserved.

4.03 *Liquidated Damages*

A. Contractor and Owner recognize that time is of the essence as stated in Paragraph 4.01 above and that Owner will suffer financial and other losses if the Work is not completed and Milestones not achieved within the times specified in Paragraph 4.02 above, plus any extensions thereof allowed in accordance with the Contract. The parties also recognize the delays, expense, and difficulties involved in proving in a legal or arbitration proceeding the actual loss suffered by Owner if the Work is not completed on time. Accordingly, instead of requiring any such proof, Owner and Contractor agree that as liquidated damages for delay (but not as a penalty):

1. Substantial Completion: Contractor shall pay Owner $750 for each day that expires after the time (as duly adjusted pursuant to the Contract) specified in Paragraph 4.02.A above for Substantial Completion until the Work is substantially complete.

2. Completion of Remaining Work: After Substantial Completion, if Contractor shall neglect, refuse, or fail to complete the remaining Work within the Contract Times (as duly adjusted pursuant to the Contract) for completion and readiness for final payment, Contractor shall pay Owner $750 for each day that expires after such time until the Work is completed and ready for final payment.

3. Liquidated damages for failing to timely attain Substantial Completion and final completion are not additive and will not be imposed concurrently.

4.04 *Special Damages*

A. In addition to the amount provided for liquidated damages, Contractor shall reimburse Owner (1) for any fines or penalties imposed on Owner as a direct result of the Contractor's failure to attain Substantial Completion according to the Contract Times, and (2) for the actual costs reasonably incurred by Owner for engineering, construction observation, inspection, and administrative services needed after the time specified in Paragraph 4.02 for Substantial Completion (as duly adjusted pursuant to the Contract), until the Work is substantially complete.

B. After Contractor achieves Substantial Completion, if Contractor shall neglect, refuse, or fail to complete the remaining Work within the Contract Times, Contractor shall reimburse Owner for the actual costs reasonably incurred by Owner for engineering, construction observation, inspection, and administrative services needed after the time specified in Paragraph 4.02 for Work to be completed and ready for final payment (as duly adjusted pursuant to the Contract), until the Work is completed and ready for final payment.

ARTICLE 5 – CONTRACT PRICE

5.01 Owner shall pay Contractor for completion of the Work in accordance with the Contract Documents the amounts that follow, subject to adjustment under the Contract:

A. For all Work other than Unit Price Work, a lump sum of: $_____.

All specific cash allowances are included in the above price in accordance with Paragraph 13.02 of the General Conditions.

B. For all Unit Price Work, an amount equal to the sum of the extended prices (established for each separately identified item of Unit Price Work by multiplying the unit price times the actual quantity of that item):

Copyright © 2013 National Society of Professional Engineers, American Council of Engineering Companies, and American Society of Civil Engineers. All rights reserved.

Unit Price Work					
Item No.	**Description**	**Unit**	**Estimated Quantity**	**Unit Price**	**Extended Price**
Total of all Extended Prices for Unit Price Work (subject to final adjustment based on actual quantities)					$

The extended prices for Unit Price Work set forth as of the Effective Date of the Contract are based on estimated quantities. As provided in Paragraph 13.03 of the General Conditions, estimated quantities are not guaranteed, and determinations of actual quantities and classifications are to be made by Engineer.

C. Total of Unit Price Work (subject to final Unit Price adjustment) $_____.

D. For all Work, at the prices stated in Contractor's Bid, attached hereto as an exhibit.

ARTICLE 6 – PAYMENT PROCEDURES

6.01 *Submittal and Processing of Payments*

A. Contractor shall submit Applications for Payment in accordance with Article 15 of the General Conditions. Applications for Payment will be processed by Engineer as provided in the General Conditions.

6.02 *Progress Payments; Retainage*

A. Owner shall make progress payments on account of the Contract Price on the basis of Contractor's Applications for Payment on or about the 25 day of each month during performance of the Work as provided in Paragraph 6.02.A.1 below, provided that such Applications for Payment have been submitted in a timely manner and otherwise meet the requirements of the Contract. All such payments will be measured by the Schedule of Values established as provided in the General Conditions (and in the case of Unit Price Work based on the number of units completed) or, in the event there is no Schedule of Values, as provided elsewhere in the Contract.

1. Prior to Substantial Completion, progress payments will be made in an amount equal to the percentage indicated below but, in each case, less the aggregate of payments previously made and less such amounts as Owner may withhold, including but not limited to liquidated damages, in accordance with the Contract

Copyright © 2013 National Society of Professional Engineers, American Council of Engineering Companies, and American Society of Civil Engineers. All rights reserved.

a. 90 percent of Work completed (with the balance being retainage). If the Work has been 50 percent completed as determined by Engineer, and if the character and progress of the Work have been satisfactory to Owner and Engineer, then as long as the character and progress of the Work remain satisfactory to Owner and Engineer, there will be no additional retainage; and

b. 90 percent of cost of materials and equipment not incorporated in the Work (with the balance being retainage).

B. Upon Substantial Completion, Owner shall pay an amount sufficient to increase total payments to Contractor to 95 percent of the Work completed, less such amounts set off by Owner pursuant to Paragraph 15.01.E of the General Conditions, and less 200 percent of Engineer's estimate of the value of Work to be completed or corrected as shown on the punch list of items to be completed or corrected prior to final payment.

6.03 *Final Payment*

A. Upon final completion and acceptance of the Work in accordance with Paragraph 15.06 of the General Conditions, Owner shall pay the remainder of the Contract Price as recommended by Engineer as provided in said Paragraph 15.06.

ARTICLE 7 – INTEREST

7.01 All amounts not paid when due shall bear interest at the rate of *1* percent per annum.

ARTICLE 8 – CONTRACTOR'S REPRESENTATIONS

8.01 In order to induce Owner to enter into this Contract, Contractor makes the following representations:

A. Contractor has examined and carefully studied the Contract Documents, and any data and reference items identified in the Contract Documents.

B. Contractor has visited the Site, conducted a thorough, alert visual examination of the Site and adjacent areas, and become familiar with and is satisfied as to the general, local, and Site conditions that may affect cost, progress, and performance of the Work.

C. Contractor is familiar with and is satisfied as to all Laws and Regulations that may affect cost, progress, and performance of the Work.

D. Contractor has carefully studied all: (1) reports of explorations and tests of subsurface conditions at or adjacent to the Site and all drawings of physical conditions relating to existing surface or subsurface structures at the Site that have been identified in the Supplementary Conditions, especially with respect to Technical Data in such reports and drawings, and (2) reports and drawings relating to Hazardous Environmental Conditions, if any, at or adjacent to the Site that have been identified in the Supplementary Conditions, especially with respect to Technical Data in such reports and drawings.

E. Contractor has considered the information known to Contractor itself; information commonly known to contractors doing business in the locality of the Site; information and observations obtained from visits to the Site; the Contract Documents; and the Site-related reports and drawings identified in the Contract Documents, with respect to the effect of such information, observations, and documents on (1) the cost, progress, and performance of the Work; (2) the means, methods, techniques, sequences, and procedures of construction to be employed by Contractor; and (3) Contractor's safety precautions and programs.

F. Based on the information and observations referred to in the preceding paragraph, Contractor agrees that no further examinations, investigations, explorations, tests, studies, or data are

Copyright © 2013 National Society of Professional Engineers, American Council of Engineering Companies, and American Society of Civil Engineers. All rights reserved.

necessary for the performance of the Work at the Contract Price, within the Contract Times, and in accordance with the other terms and conditions of the Contract.

G. Contractor is aware of the general nature of work to be performed by Owner and others at the Site that relates to the Work as indicated in the Contract Documents.

H. Contractor has given Engineer written notice of all conflicts, errors, ambiguities, or discrepancies that Contractor has discovered in the Contract Documents, and the written resolution thereof by Engineer is acceptable to Contractor.

I. The Contract Documents are generally sufficient to indicate and convey understanding of all terms and conditions for performance and furnishing of the Work.

J. Contractor's entry into this Contract constitutes an incontrovertible representation by Contractor that without exception all prices in the Agreement are premised upon performing and furnishing the Work required by the Contract Documents.

ARTICLE 9 – CONTRACT DOCUMENTS

9.01 *Contents*

A. The Contract Documents consist of the following:

1. This Agreement (pages 1 to 8, inclusive).
2. Performance bond (pages ___ to ___, inclusive).
3. Payment bond (pages ___ to ___, inclusive).
4. Other bonds.
   a. ___ (pages ___ to ___, inclusive).
5. General Conditions (pages ___ to ___, inclusive).
6. Supplementary Conditions (pages ___ to ___, inclusive).
7. Specifications as listed in the table of contents of the Project Manual.

   Drawings (not attached but incorporated by reference) consisting of **37** sheets with each sheet bearing the following general title: "**Horseleg Creek Sanitary Sewer Pump Station Addition"**.

8. Addenda (numbers ___ to ___, inclusive).
9. Exhibits to this Agreement (enumerated as follows):
   a. Contractor's Bid (pages ___ to ___, inclusive).
10. The following which may be delivered or issued on or after the Effective Date of the Contract and are not attached hereto:
    a. Notice to Proceed.
    b. Work Change Directives.
    c. Change Orders.
    d. Field Orders.

B. The documents listed in Paragraph 9.01.A are attached to this Agreement (except as expressly noted otherwise above).

C. There are no Contract Documents other than those listed above in this Article 9.

Copyright © 2013 National Society of Professional Engineers, American Council of Engineering Companies, and American Society of Civil Engineers. All rights reserved.

D. The Contract Documents may only be amended, modified, or supplemented as provided in the General Conditions.

ARTICLE 10 – MISCELLANEOUS

10.01 *Terms*

A. Terms used in this Agreement will have the meanings stated in the General Conditions and the Supplementary Conditions.

10.02 *Assignment of Contract*

A. Unless expressly agreed to elsewhere in the Contract, no assignment by a party hereto of any rights under or interests in the Contract will be binding on another party hereto without the written consent of the party sought to be bound; and, specifically but without limitation, money that may become due and money that is due may not be assigned without such consent (except to the extent that the effect of this restriction may be limited by law), and unless specifically stated to the contrary in any written consent to an assignment, no assignment will release or discharge the assignor from any duty or responsibility under the Contract Documents.

10.03 *Successors and Assigns*

A. Owner and Contractor each binds itself, its successors, assigns, and legal representatives to the other party hereto, its successors, assigns, and legal representatives in respect to all covenants, agreements, and obligations contained in the Contract Documents.

10.04 *Severability*

A. Any provision or part of the Contract Documents held to be void or unenforceable under any Law or Regulation shall be deemed stricken, and all remaining provisions shall continue to be valid and binding upon Owner and Contractor, who agree that the Contract Documents shall be reformed to replace such stricken provision or part thereof with a valid and enforceable provision that comes as close as possible to expressing the intention of the stricken provision.

10.05 *Contractor's Certifications*

A. Contractor certifies that it has not engaged in corrupt, fraudulent, collusive, or coercive practices in competing for or in executing the Contract. For the purposes of this Paragraph 10.05:

1. "corrupt practice" means the offering, giving, receiving, or soliciting of any thing of value likely to influence the action of a public official in the bidding process or in the Contract execution;

2. "fraudulent practice" means an intentional misrepresentation of facts made (a) to influence the bidding process or the execution of the Contract to the detriment of Owner, (b) to establish Bid or Contract prices at artificial non-competitive levels, or (c) to deprive Owner of the benefits of free and open competition;

3. "collusive practice" means a scheme or arrangement between two or more Bidders, with or without the knowledge of Owner, a purpose of which is to establish Bid prices at artificial, non-competitive levels; and

4. "coercive practice" means harming or threatening to harm, directly or indirectly, persons or their property to influence their participation in the bidding process or affect the execution of the Contract.

Copyright © 2013 National Society of Professional Engineers, American Council of Engineering Companies, and American Society of Civil Engineers. All rights reserved.

10.06 *Other Provisions*

A. Owner stipulates that if the General Conditions that are made a part of this Contract are based on EJCDC® C-700, Standard General Conditions for the Construction Contract, published by the Engineers Joint Contract Documents Committee®, and if Owner is the party that has furnished said General Conditions, then Owner has plainly shown all modifications to the standard wording of such published document to the Contractor, through a process such as highlighting or "track changes" (redline/strikeout), or in the Supplementary Conditions.

Copyright © 2013 National Society of Professional Engineers, American Council of Engineering Companies, and American Society of Civil Engineers. All rights reserved.

IN WITNESS WHEREOF, Owner and Contractor have signed this Agreement.

This Agreement will be effective on_____ (which is the Effective Date of the Contract).

OWNER:

The City of Rome, Georgia

By: _____

Title: _____

Attest: _____

Title: _____

Address for giving notices:

The City of Rome, Georgia

601 Broad Street

Rome, Georgia 30162

(If Owner is a corporation, attach evidence of authority to sign. If Owner is a public body, attach evidence of authority to sign and resolution or other documents authorizing execution of this Agreement.)

CONTRACTOR:

_____

By: _____

Title: _____

(If Contractor is a corporation, a partnership, or a joint venture, attach evidence of authority to sign.)

Attest: _____

Title: _____

Address for giving notices:

_____

_____

_____

License No.: _____
(where applicable)

NOTE TO USER: Use in those states or other jurisdictions where applicable or required.

Copyright © 2013 National Society of Professional Engineers, American Council of Engineering Companies, and American Society of Civil Engineers. All rights reserved.

SECTION 006000.00 – PROJECT FORMS

1.1 FORM OF AGREEMENT AND GENERAL CONDITIONS

A. The following form of Owner/Contractor Agreement and form of the General Conditions shall be used for Project:

1. EJCDC Document C-520, "Suggested Form of Agreement between Owner and Contractor for Construction Contract (Stipulated Price)."

   a. The General Conditions for Project are EJCDC Document C-700, "Standard General Conditions of the Construction Contract."

2. The General Conditions are included in the Project Manual.

3. The Supplementary Conditions for Project are separately prepared and included in the Project Manual.

1.2 ADMINISTRATIVE FORMS

A. Administrative Forms: Additional administrative forms are specified in Division 01 General Requirements.

B. Copies of standard forms not included in the Project Manual may be obtained from the respective agencies who produce the forms.

C. Preconstruction Forms:

1. Form of Performance Bond: EJCDC Document C-610, "Performance Bond."

2. Form of Payment Bond: EJCDC Document C-615(A), “Payment Bond.”

D. Information and Modification Forms:

1. Form for Requests for Information (RFIs): Engineer’s Standard Form issued for the Project.
2. Change Order Form: EJCDC Document C-941, "Change Order."
3. Form of Engineer’s Memorandum for Minor Changes in the Work: EJCDC Document C-942, "Field Order."
4. Form of Work Change Directive: EJCDC Document C-940, "Work Change Directive."

E. Payment Forms:

1. Schedule of Values Form: Contractor’s Standard Form issued for the Project.
2. Payment Application: EJCDC Document C-620, "Contractor’s Application for Payment."

3. Form of Contractor's Affidavit: AIA Document G706, "Contractor's Affidavit of Payment of Debts and Claims."
4. Form of Affidavit of Release of Liens: AIA Document G706A, "Contractor's Affidavit of Payment of Release of Liens."
5. Form of Consent of Surety: AIA Document G707, "Consent of Surety to Final Payment."

END OF SECTION 006000

EJCDC
ENGINEERS JOINT CONTRACT DOCUMENTS COMMITTEE

PERFORMANCE BOND

CONTRACTOR *(name and address)*:

SURETY *(name and address of principal place of business)*:

OWNER *(name and address)*:

CONSTRUCTION CONTRACT
Effective Date of the Agreement:
Amount:
Description *(name and location)*:

BOND
Bond Number:
Date *(not earlier than the Effective Date of the Agreement of the Construction Contract)*:
Amount:
Modifications to this Bond Form: ☐ None ☐ See Paragraph 16

Surety and Contractor, intending to be legally bound hereby, subject to the terms set forth below, do each cause this Performance Bond to be duly executed by an authorized officer, agent, or representative.

CONTRACTOR AS PRINCIPAL

_____ *(seal)*
Contractor's Name and Corporate Seal

By: _____
Signature

_____
Print Name

_____
Title

Attest: _____
Signature

_____
Title

SURETY

_____ *(seal)*
Surety's Name and Corporate Seal

By: _____
Signature *(attach power of attorney)*

_____
Print Name

_____
Title

Attest: _____
Signature

_____
Title

Notes: (1) Provide supplemental execution by any additional parties, such as joint venturers. (2) Any singular reference to Contractor, Surety, Owner, or other party shall be considered plural where applicable.

Copyright © 2013 National Society of Professional Engineers, American Council of Engineering Companies, and American Society of Civil Engineers. All rights reserved.

1. The Contractor and Surety, jointly and severally, bind themselves, their heirs, executors, administrators, successors, and assigns to the Owner for the performance of the Construction Contract, which is incorporated herein by reference.

2. If the Contractor performs the Construction Contract, the Surety and the Contractor shall have no obligation under this Bond, except when applicable to participate in a conference as provided in Paragraph 3.

3. If there is no Owner Default under the Construction Contract, the Surety's obligation under this Bond shall arise after:

3.1 The Owner first provides notice to the Contractor and the Surety that the Owner is considering declaring a Contractor Default. Such notice shall indicate whether the Owner is requesting a conference among the Owner, Contractor, and Surety to discuss the Contractor's performance. If the Owner does not request a conference, the Surety may, within five (5) business days after receipt of the Owner's notice, request such a conference. If the Surety timely requests a conference, the Owner shall attend. Unless the Owner agrees otherwise, any conference requested under this Paragraph 3.1 shall be held within ten (10) business days of the Surety's receipt of the Owner's notice. If the Owner, the Contractor, and the Surety agree, the Contractor shall be allowed a reasonable time to perform the Construction Contract, but such an agreement shall not waive the Owner's right, if any, subsequently to declare a Contractor Default;

3.2 The Owner declares a Contractor Default, terminates the Construction Contract and notifies the Surety; and

3.3 The Owner has agreed to pay the Balance of the Contract Price in accordance with the terms of the Construction Contract to the Surety or to a contractor selected to perform the Construction Contract.

4. Failure on the part of the Owner to comply with the notice requirement in Paragraph 3.1 shall not constitute a failure to comply with a condition precedent to the Surety's obligations, or release the Surety from its obligations, except to the extent the Surety demonstrates actual prejudice.

5. When the Owner has satisfied the conditions of Paragraph 3, the Surety shall promptly and at the Surety's expense take one of the following actions:

5.1 Arrange for the Contractor, with the consent of the Owner, to perform and complete the Construction Contract;

5.2 Undertake to perform and complete the Construction Contract itself, through its agents or independent contractors;

5.3 Obtain bids or negotiated proposals from qualified contractors acceptable to the Owner for a contract for performance and completion of the Construction Contract, arrange for a contract to be prepared for execution by the Owner and a contractor selected with the Owners concurrence, to be secured with performance and payment bonds executed by a qualified surety equivalent to the bonds issued on the Construction Contract, and pay to the Owner the amount of damages as described in Paragraph 7 in excess of the Balance of the Contract Price incurred by the Owner as a result of the Contractor Default; or

5.4 Waive its right to perform and complete, arrange for completion, or obtain a new contractor, and with reasonable promptness under the circumstances:

5.4.1 After investigation, determine the amount for which it may be liable to the Owner and, as soon as practicable after the amount is determined, make payment to the Owner; or

5.4.2 Deny liability in whole or in part and notify the Owner, citing the reasons for denial.

6. If the Surety does not proceed as provided in Paragraph 5 with reasonable promptness, the Surety shall be deemed to be in default on this Bond seven days after receipt of an additional written notice from the Owner to the Surety demanding that the Surety perform its obligations under this Bond, and the Owner shall be entitled to enforce any remedy available to the Owner. If the Surety proceeds as provided in Paragraph 5.4, and the Owner refuses the payment or the Surety has denied liability, in whole or in part, without further notice the Owner shall be entitled to enforce any remedy available to the Owner.

7. If the Surety elects to act under Paragraph 5.1, 5.2, or 5.3, then the responsibilities of the Surety to the Owner shall not be greater than those of the Contractor under the Construction Contract, and the responsibilities of the Owner to the Surety shall not be greater than those of the Owner under the Construction Contract. Subject to the commitment by the Owner to pay the Balance of the Contract Price, the Surety is obligated, without duplication for:

7.1 the responsibilities of the Contractor for correction of defective work and completion of the Construction Contract;

7.2 additional legal, design professional, and delay costs resulting from the Contractor's Default, and resulting from the actions or failure to act of the Surety under Paragraph 5; and

7.3 liquidated damages, or if no liquidated damages are specified in the Construction Contract, actual damages caused by delayed performance or non-performance of the Contractor.

8. If the Surety elects to act under Paragraph 5.1, 5.3, or 5.4, the Surety's liability is limited to the amount of this Bond.

9. The Surety shall not be liable to the Owner or others for obligations of the Contractor that are unrelated to the Construction Contract, and the Balance of the Contract Price shall not be reduced or set off on account of any such unrelated obligations. No right of action shall accrue on this Bond to any person or entity other than the Owner or its heirs, executors, administrators, successors, and assigns.

Copyright © 2013 National Society of Professional Engineers, American Council of Engineering Companies, and American Society of Civil Engineers. All rights reserved.

10. The Surety hereby waives notice of any change, including changes of time, to the Construction Contract or to related subcontracts, purchase orders, and other obligations.

11. Any proceeding, legal or equitable, under this Bond may be instituted in any court of competent jurisdiction in the location in which the work or part of the work is located and shall be instituted within two years after a declaration of Contractor Default or within two years after the Contractor ceased working or within two years after the Surety refuses or fails to perform its obligations under this Bond, whichever occurs first. If the provisions of this paragraph are void or prohibited by law, the minimum periods of limitations available to sureties as a defense in the jurisdiction of the suit shall be applicable.

12. Notice to the Surety, the Owner, or the Contractor shall be mailed or delivered to the address shown on the page on which their signature appears.

13. When this Bond has been furnished to comply with a statutory or other legal requirement in the location where the construction was to be performed, any provision in this Bond conflicting with said statutory or legal requirement shall be deemed deleted herefrom and provisions conforming to such statutory or other legal requirement shall be deemed incorporated herein. When so furnished, the intent is that this Bond shall be construed as a statutory bond and not as a common law bond.

14. Definitions

14.1 Balance of the Contract Price: The total amount payable by the Owner to the Contractor under the Construction Contract after all proper adjustments have been made including allowance for the Contractor for any amounts received or to be received by the Owner in settlement of insurance or other claims for damages to which the Contractor is entitled, reduced by all valid and proper payments made to or on behalf of the Contractor under the Construction Contract.

14.2 Construction Contract: The agreement between the Owner and Contractor identified on the cover page, including all Contract Documents and changes made to the agreement and the Contract Documents.

14.3 Contractor Default: Failure of the Contractor, which has not been remedied or waived, to perform or otherwise to comply with a material term of the Construction Contract.

14.4 Owner Default: Failure of the Owner, which has not been remedied or waived, to pay the Contractor as required under the Construction Contract or to perform and complete or comply with the other material terms of the Construction Contract.

14.5 Contract Documents: All the documents that comprise the agreement between the Owner and Contractor.

15. If this Bond is issued for an agreement between a contractor and subcontractor, the term Contractor in this Bond shall be deemed to be Subcontractor and the term Owner shall be deemed to be Contractor.

16. Modifications to this Bond are as follows:

Copyright © 2013 National Society of Professional Engineers, American Council of Engineering Companies, and American Society of Civil Engineers. All rights reserved.

This page intentionally left blank.

Copyright © 2013 National Society of Professional Engineers, American Council of Engineering Companies, and American Society of Civil Engineers. All rights reserved.

EJCDC
ENGINEERS JOINT CONTRACT DOCUMENTS COMMITTEE

PAYMENT BOND

CONTRACTOR *(name and address)*:

SURETY *(name and address of principal place of business)*:

OWNER *(name and address)*:

CONSTRUCTION CONTRACT
Effective Date of the Agreement:
Amount:
Description *(name and location)*:

BOND
Bond Number:
Date *(not earlier than the Effective Date of the Agreement of the Construction Contract)*:
Amount:
Modifications to this Bond Form: ☐ None ☐ See Paragraph 18

Surety and Contractor, intending to be legally bound hereby, subject to the terms set forth below, do each cause this Payment Bond to be duly executed by an authorized officer, agent, or representative.

CONTRACTOR AS PRINCIPAL

_____ *(seal)*
Contractor's Name and Corporate Seal

By: _____
Signature

_____
Print Name

_____
Title

Attest: _____
Signature

_____
Title

SURETY

_____ *(seal)*
Surety's Name and Corporate Seal

By: _____
Signature *(attach power of attorney)*

_____
Print Name

_____
Title

Attest: _____
Signature

_____
Title

Notes: (1) Provide supplemental execution by any additional parties, such as joint venturers. (2) Any singular reference to Contractor, Surety, Owner, or other party shall be considered plural where applicable.

Copyright © 2013 National Society of Professional Engineers, American Council of Engineering Companies, and American Society of Civil Engineers. All rights reserved.

1. The Contractor and Surety, jointly and severally, bind themselves, their heirs, executors, administrators, successors, and assigns to the Owner to pay for labor, materials, and equipment furnished for use in the performance of the Construction Contract, which is incorporated herein by reference, subject to the following terms.

2. If the Contractor promptly makes payment of all sums due to Claimants, and defends, indemnifies, and holds harmless the Owner from claims, demands, liens, or suits by any person or entity seeking payment for labor, materials, or equipment furnished for use in the performance of the Construction Contract, then the Surety and the Contractor shall have no obligation under this Bond.

3. If there is no Owner Default under the Construction Contract, the Surety's obligation to the Owner under this Bond shall arise after the Owner has promptly notified the Contractor and the Surety (at the address described in Paragraph 13) of claims, demands, liens, or suits against the Owner or the Owner's property by any person or entity seeking payment for labor, materials, or equipment furnished for use in the performance of the Construction Contract, and tendered defense of such claims, demands, liens, or suits to the Contractor and the Surety.

4. When the Owner has satisfied the conditions in Paragraph 3, the Surety shall promptly and at the Surety's expense defend, indemnify, and hold harmless the Owner against a duly tendered claim, demand, lien, or suit.

5. The Surety's obligations to a Claimant under this Bond shall arise after the following:

   5.1 Claimants who do not have a direct contract with the Contractor,

      5.1.1 have furnished a written notice of non-payment to the Contractor, stating with substantial accuracy the amount claimed and the name of the party to whom the materials were, or equipment was, furnished or supplied or for whom the labor was done or performed, within ninety (90) days after having last performed labor or last furnished materials or equipment included in the Claim; and

      5.1.2 have sent a Claim to the Surety (at the address described in Paragraph 13).

   5.2 Claimants who are employed by or have a direct contract with the Contractor have sent a Claim to the Surety (at the address described in Paragraph 13).

6. If a notice of non-payment required by Paragraph 5.1.1 is given by the Owner to the Contractor, that is sufficient to satisfy a Claimant's obligation to furnish a written notice of non-payment under Paragraph 5.1.1.

7. When a Claimant has satisfied the conditions of Paragraph 5.1 or 5.2, whichever is applicable, the Surety shall promptly and at the Surety's expense take the following actions:

   7.1 Send an answer to the Claimant, with a copy to the Owner, within sixty (60) days after receipt of the Claim, stating the amounts that are undisputed and the basis for challenging any amounts that are disputed; and

   7.2 Pay or arrange for payment of any undisputed amounts.

   7.3 The Surety's failure to discharge its obligations under Paragraph 7.1 or 7.2 shall not be deemed to constitute a waiver of defenses the Surety or Contractor may have or acquire as to a Claim, except as to undisputed amounts for which the Surety and Claimant have reached agreement. If, however, the Surety fails to discharge its obligations under Paragraph 7.1 or 7.2, the Surety shall indemnify the Claimant for the reasonable attorney's fees the Claimant incurs thereafter to recover any sums found to be due and owing to the Claimant.

8. The Surety's total obligation shall not exceed the amount of this Bond, plus the amount of reasonable attorney's fees provided under Paragraph 7.3, and the amount of this Bond shall be credited for any payments made in good faith by the Surety.

9. Amounts owed by the Owner to the Contractor under the Construction Contract shall be used for the performance of the Construction Contract and to satisfy claims, if any, under any construction performance bond. By the Contractor furnishing and the Owner accepting this Bond, they agree that all funds earned by the Contractor in the performance of the Construction Contract are dedicated to satisfy obligations of the Contractor and Surety under this Bond, subject to the Owner's priority to use the funds for the completion of the work.

10. The Surety shall not be liable to the Owner, Claimants, or others for obligations of the Contractor that are unrelated to the Construction Contract. The Owner shall not be liable for the payment of any costs or expenses of any Claimant under this Bond, and shall have under this Bond no obligation to make payments to or give notice on behalf of Claimants, or otherwise have any obligations to Claimants under this Bond.

11. The Surety hereby waives notice of any change, including changes of time, to the Construction Contract or to related subcontracts, purchase orders, and other obligations.

12. No suit or action shall be commenced by a Claimant under this Bond other than in a court of competent jurisdiction in the state in which the project that is the subject of the Construction Contract is located or after the expiration of one year from the date (1) on which the Claimant sent a Claim to the Surety pursuant to Paragraph 5.1.2 or 5.2, or (2) on which the last labor or service was performed by anyone or the last materials or equipment were furnished by anyone under the Construction Contract, whichever of (1) or (2) first occurs. If the provisions of this paragraph

Copyright © 2013 National Society of Professional Engineers, American Council of Engineering Companies, and American Society of Civil Engineers. All rights reserved.

are void or prohibited by law, the minimum period of limitation available to sureties as a defense in the jurisdiction of the suit shall be applicable.

13. Notice and Claims to the Surety, the Owner, or the Contractor shall be mailed or delivered to the address shown on the page on which their signature appears. Actual receipt of notice or Claims, however accomplished, shall be sufficient compliance as of the date received.

14. When this Bond has been furnished to comply with a statutory or other legal requirement in the location where the construction was to be performed, any provision in this Bond conflicting with said statutory or legal requirement shall be deemed deleted herefrom and provisions conforming to such statutory or other legal requirement shall be deemed incorporated herein. When so furnished, the intent is that this Bond shall be construed as a statutory bond and not as a common law bond.

15. Upon requests by any person or entity appearing to be a potential beneficiary of this Bond, the Contractor and Owner shall promptly furnish a copy of this Bond or shall permit a copy to be made.

16. **Definitions**

16.1 **Claim:** A written statement by the Claimant including at a minimum:

1. The name of the Claimant;
2. The name of the person for whom the labor was done, or materials or equipment furnished;
3. A copy of the agreement or purchase order pursuant to which labor, materials, or equipment was furnished for use in the performance of the Construction Contract;
4. A brief description of the labor, materials, or equipment furnished;
5. The date on which the Claimant last performed labor or last furnished materials or equipment for use in the performance of the Construction Contract;
6. The total amount earned by the Claimant for labor, materials, or equipment furnished as of the date of the Claim;
7. The total amount of previous payments received by the Claimant; and
8. The total amount due and unpaid to the Claimant for labor, materials, or equipment furnished as of the date of the Claim.

16.2 **Claimant:** An individual or entity having a direct contract with the Contractor or with a subcontractor of the Contractor to furnish labor, materials, or equipment for use in the performance of the Construction Contract. The term Claimant also includes any individual or entity that has rightfully asserted a claim under an applicable mechanic's lien or similar statute against the real property upon which the Project is located. The intent of this Bond shall be to include without limitation in the terms of "labor, materials, or equipment" that part of the water, gas, power, light, heat, oil, gasoline, telephone service, or rental equipment used in the Construction Contract, architectural and engineering services required for performance of the work of the Contractor and the Contractor's subcontractors, and all other items for which a mechanic's lien may be asserted in the jurisdiction where the labor, materials, or equipment were furnished.

16.3 **Construction Contract:** The agreement between the Owner and Contractor identified on the cover page, including all Contract Documents and all changes made to the agreement and the Contract Documents.

16.4 **Owner Default**: Failure of the Owner, which has not been remedied or waived, to pay the Contractor as required under the Construction Contract or to perform and complete or comply with the other material terms of the Construction Contract.

16.5 **Contract Documents:** All the documents that comprise the agreement between the Owner and Contractor.

17. If this Bond is issued for an agreement between a contractor and subcontractor, the term Contractor in this Bond shall be deemed to be Subcontractor and the term Owner shall be deemed to be Contractor.

18. Modifications to this Bond are as follows:

Copyright © 2013 National Society of Professional Engineers, American Council of Engineering Companies, and American Society of Civil Engineers. All rights reserved.

This page intentionally left blank.

Copyright © 2013 National Society of Professional Engineers, American Council of Engineering Companies, and American Society of Civil Engineers. All rights reserved.

SECTION 007213.12 - GENERAL CONDITIONS - EJCDC STIPULATED SUM (SINGLE-PRIME CONTRACT)

1.1 GENERAL CONDITIONS

A. General Conditions of the Contract: EJCDC C-700 - Standard General Conditions of the Construction Contract.

1.2 SUPPLEMENTARY CONDITIONS

A. Refer to Document 007314 - Supplementary Conditions - EJCDC for amendments and supplements to General Conditions.

END OF DOCUMENT 007213.12

This page intentionally left blank.

This document has important legal consequences; consultation with an attorney is encouraged with respect to its use or modification. This document should be adapted to the particular circumstances of the contemplated Project and the controlling Laws and Regulations.

STANDARD GENERAL CONDITIONS OF THE CONSTRUCTION CONTRACT

Prepared by

EJCDC®
ENGINEERS JOINT CONTRACT DOCUMENTS COMMITTEE

Issued and Published Jointly by

ACEC
AMERICAN COUNCIL OF ENGINEERING COMPANIES

ASCE
AMERICAN SOCIETY OF CIVIL ENGINEERS

National Society of Professional Engineers®

Endorsed by

CSI NUCA
REPRESENTING UTILITY & EXCAVATION CONTRACTORS

EJCDC® C-700 (Rev. 1), Standard General Conditions of the Construction Contract.
Copyright © 2013 National Society of Professional Engineers, American Council of Engineering Companies, and American Society of Civil Engineers. All rights reserved.

These General Conditions have been prepared for use with the Agreement Between Owner and Contractor for Construction Contract (EJCDC® C-520, Stipulated Sum, or C-525, Cost-Plus, 2013 Editions). Their provisions are interrelated and a change in one may necessitate a change in the other.

To prepare supplementary conditions that are coordinated with the General Conditions, use EJCDC's Guide to the Preparation of Supplementary Conditions (EJCDC® C-800, 2013 Edition). The full EJCDC Construction series of documents is discussed in the Commentary on the 2013 EJCDC Construction Documents (EJCDC® C-001, 2013 Edition).

Copyright © 2013:

National Society of Professional Engineers

1420 King Street, Alexandria, VA 22314-2794

(703) 684-2882

www.nspe.org

American Council of Engineering Companies

1015 15th Street N.W., Washington, DC 20005

(202) 347-7474

www.acec.org

American Society of Civil Engineers

1801 Alexander Bell Drive, Reston, VA 20191-4400

(800) 548-2723

www.asce.org

The copyright for this document is owned jointly by the three sponsoring organizations listed above. The National Society of Professional Engineers is the Copyright Administrator for the EJCDC documents; please direct all inquiries regarding EJCDC copyrights to NSPE.

NOTE: EJCDC publications may be purchased at www.ejcdc.org, or from any of the sponsoring organizations above.

Copyright © 2013 National Society of Professional Engineers, American Council of Engineering Companies, and American Society of Civil Engineers. All rights reserved.

STANDARD GENERAL CONDITIONS OF THE CONSTRUCTION CONTRACT

TABLE OF CONTENTS

Page

Article 1 – Definitions and Terminology 1

1.01 Defined Terms 1

1.02 Terminology 5

Article 2 – Preliminary Matters 6

2.01 Delivery of Bonds and Evidence of Insurance 6

2.02 Copies of Documents 6

2.03 Before Starting Construction 6

2.04 Preconstruction Conference; Designation of Authorized Representatives 7

2.05 Initial Acceptance of Schedules 7

2.06 Electronic Transmittals 7

Article 3 – Documents: Intent, Requirements, Reuse 8

3.01 Intent 8

3.02 Reference Standards 8

3.03 Reporting and Resolving Discrepancies 8

3.04 Requirements of the Contract Documents 9

3.05 Reuse of Documents 10

Article 4 – Commencement and Progress of the Work 10

4.01 Commencement of Contract Times; Notice to Proceed 10

4.02 Starting the Work 10

4.03 Reference Points 10

4.04 Progress Schedule 10

4.05 Delays in Contractor's Progress 11

Article 5 – Availability of Lands; Subsurface and Physical Conditions; Hazardous Environmental Conditions 12

5.01 Availability of Lands 12

5.02 Use of Site and Other Areas 12

5.03 Subsurface and Physical Conditions 13

5.04 Differing Subsurface or Physical Conditions 14

5.05 Underground Facilities 15

Copyright © 2013 National Society of Professional Engineers, American Council of Engineering Companies, and American Society of Civil Engineers. All rights reserved.

5.06 Hazardous Environmental Conditions at Site 17
Article 6 – Bonds and Insurance 19
6.01 Performance, Payment, and Other Bonds 19
6.02 Insurance—General Provisions 19
6.03 Contractor's Insurance 20
6.04 Owner's Liability Insurance 23
6.05 Property Insurance 23
6.06 Waiver of Rights 25
6.07 Receipt and Application of Property Insurance Proceeds 25
Article 7 – Contractor's Responsibilities 26
7.01 Supervision and Superintendence 26
7.02 Labor; Working Hours 26
7.03 Services, Materials, and Equipment 26
7.04 "Or Equals" 27
7.05 Substitutes 28
7.06 Concerning Subcontractors, Suppliers, and Others 29
7.07 Patent Fees and Royalties 31
7.08 Permits 31
7.09 Taxes 32
7.10 Laws and Regulations 32
7.11 Record Documents 32
7.12 Safety and Protection 32
7.13 Safety Representative 33
7.14 Hazard Communication Programs 33
7.15 Emergencies 34
7.16 Shop Drawings, Samples, and Other Submittals 34
7.17 Contractor's General Warranty and Guarantee 36
7.18 Indemnification 37
7.19 Delegation of Professional Design Services 37
Article 8 – Other Work at the Site 38
8.01 Other Work 38
8.02 Coordination 39
8.03 Legal Relationships 39

Copyright © 2013 National Society of Professional Engineers, American Council of Engineering Companies, and American Society of Civil Engineers. All rights reserved.

Article 9 – Owner's Responsibilities 40
9.01 Communications to Contractor 40
9.02 Replacement of Engineer 40
9.03 Furnish Data 40
9.04 Pay When Due 40
9.05 Lands and Easements; Reports, Tests, and Drawings 40
9.06 Insurance 40
9.07 Change Orders 40
9.08 Inspections, Tests, and Approvals 41
9.09 Limitations on Owner's Responsibilities 41
9.10 Undisclosed Hazardous Environmental Condition 41
9.11 Evidence of Financial Arrangements 41
9.12 Safety Programs 41
Article 10 – Engineer's Status During Construction 41
10.01 Owner's Representative 41
10.02 Visits to Site 41
10.03 Project Representative 42
10.04 Rejecting Defective Work 42
10.05 Shop Drawings, Change Orders and Payments 42
10.06 Determinations for Unit Price Work 42
10.07 Decisions on Requirements of Contract Documents and Acceptability of Work 42
10.08 Limitations on Engineer's Authority and Responsibilities 42
10.09 Compliance with Safety Program 43
Article 11 – Amending the Contract Documents; Changes in the Work 43
11.01 Amending and Supplementing Contract Documents 43
11.02 Owner-Authorized Changes in the Work 44
11.03 Unauthorized Changes in the Work 44
11.04 Change of Contract Price 44
11.05 Change of Contract Times 45
11.06 Change Proposals 45
11.07 Execution of Change Orders 46
11.08 Notification to Surety 47
Article 12 – Claims 47

Copyright © 2013 National Society of Professional Engineers, American Council of Engineering Companies, and American Society of Civil Engineers. All rights reserved.

12.01 Claims 47
Article 13 – Cost of the Work; Allowances; Unit Price Work 48
13.01 Cost of the Work 48
13.02 Allowances 50
13.03 Unit Price Work 51
Article 14 – Tests and Inspections; Correction, Removal or Acceptance of Defective Work 52
14.01 Access to Work 52
14.02 Tests, Inspections, and Approvals 52
14.03 Defective Work 53
14.04 Acceptance of Defective Work 53
14.05 Uncovering Work 53
14.06 Owner May Stop the Work 54
14.07 Owner May Correct Defective Work 54
Article 15 – Payments to Contractor; Set-Offs; Completion; Correction Period 55
15.01 Progress Payments 55
15.02 Contractor's Warranty of Title 58
15.03 Substantial Completion 58
15.04 Partial Use or Occupancy 59
15.05 Final Inspection 59
15.06 Final Payment 59
15.07 Waiver of Claims 61
15.08 Correction Period 61
Article 16 – Suspension of Work and Termination 62
16.01 Owner May Suspend Work 62
16.02 Owner May Terminate for Cause 62
16.03 Owner May Terminate For Convenience 63
16.04 Contractor May Stop Work or Terminate 63
Article 17 – Final Resolution of Disputes 64
17.01 Methods and Procedures 64
Article 18 – Miscellaneous 64
18.01 Giving Notice 64
18.02 Computation of Times 64
18.03 Cumulative Remedies 64

Copyright © 2013 National Society of Professional Engineers, American Council of Engineering Companies, and American Society of Civil Engineers. All rights reserved.

18.04 Limitation of Damages 65
18.05 No Waiver 65
18.06 Survival of Obligations 65
18.07 Controlling Law 65
18.08 Headings 65

Copyright © 2013 National Society of Professional Engineers, American Council of Engineering Companies, and American Society of Civil Engineers. All rights reserved.

ARTICLE 1 – DEFINITIONS AND TERMINOLOGY

1.01 *Defined Terms*

A. Wherever used in the Bidding Requirements or Contract Documents, a term printed with initial capital letters, including the term's singular and plural forms, will have the meaning indicated in the definitions below. In addition to terms specifically defined, terms with initial capital letters in the Contract Documents include references to identified articles and paragraphs, and the titles of other documents or forms.

1. *Addenda*—Written or graphic instruments issued prior to the opening of Bids which clarify, correct, or change the Bidding Requirements or the proposed Contract Documents.

2. *Agreement*—The written instrument, executed by Owner and Contractor, that sets forth the Contract Price and Contract Times, identifies the parties and the Engineer, and designates the specific items that are Contract Documents.

3. *Application for Payment*—The form acceptable to Engineer which is to be used by Contractor during the course of the Work in requesting progress or final payments and which is to be accompanied by such supporting documentation as is required by the Contract Documents.

4. *Bid*—The offer of a Bidder submitted on the prescribed form setting forth the prices for the Work to be performed.

5. *Bidder*—An individual or entity that submits a Bid to Owner.

6. *Bidding Documents*—The Bidding Requirements, the proposed Contract Documents, and all Addenda.

7. *Bidding Requirements*—The advertisement or invitation to bid, Instructions to Bidders, Bid Bond or other Bid security, if any, the Bid Form, and the Bid with any attachments.

8. *Change Order*—A document which is signed by Contractor and Owner and authorizes an addition, deletion, or revision in the Work or an adjustment in the Contract Price or the Contract Times, or other revision to the Contract, issued on or after the Effective Date of the Contract.

9. *Change Proposal*—A written request by Contractor, duly submitted in compliance with the procedural requirements set forth herein, seeking an adjustment in Contract Price or Contract Times, or both; contesting an initial decision by Engineer concerning the requirements of the Contract Documents or the acceptability of Work under the Contract Documents; challenging a set-off against payments due; or seeking other relief with respect to the terms of the Contract.

10. *Claim*—(a) A demand or assertion by Owner directly to Contractor, duly submitted in compliance with the procedural requirements set forth herein: seeking an adjustment of Contract Price or Contract Times, or both; contesting an initial decision by Engineer concerning the requirements of the Contract Documents or the acceptability of Work under the Contract Documents; contesting Engineer's decision regarding a Change Proposal; seeking resolution of a contractual issue that Engineer has declined to address; or seeking other relief with respect to the terms of the Contract; or (b) a demand or assertion by Contractor directly to Owner, duly submitted in compliance with the procedural requirements set forth herein, contesting Engineer's decision regarding a Change Proposal; or seeking resolution of a contractual issue that Engineer

Copyright © 2013 National Society of Professional Engineers, American Council of Engineering Companies, and American Society of Civil Engineers. All rights reserved.

has declined to address. A demand for money or services by a third party is not a Claim.

11. *Constituent of Concern*—Asbestos, petroleum, radioactive materials, polychlorinated biphenyls (PCBs), hazardous waste, and any substance, product, waste, or other material of any nature whatsoever that is or becomes listed, regulated, or addressed pursuant to (a) the Comprehensive Environmental Response, Compensation and Liability Act, 42 U.S.C. §§9601 et seq. ("CERCLA"); (b) the Hazardous Materials Transportation Act, 49 U.S.C. §§5101 et seq.; (c) the Resource Conservation and Recovery Act, 42 U.S.C. §§6901 et seq. ("RCRA"); (d) the Toxic Substances Control Act, 15 U.S.C. §§2601 et seq.; (e) the Clean Water Act, 33 U.S.C. §§1251 et seq.; (f) the Clean Air Act, 42 U.S.C. §§7401 et seq.; or (g) any other federal, state, or local statute, law, rule, regulation, ordinance, resolution, code, order, or decree regulating, relating to, or imposing liability or standards of conduct concerning, any hazardous, toxic, or dangerous waste, substance, or material.

12. *Contract*—The entire and integrated written contract between the Owner and Contractor concerning the Work.

13. *Contract Documents*—Those items so designated in the Agreement, and which together comprise the Contract.

14. *Contract Price*—The money that Owner has agreed to pay Contractor for completion of the Work in accordance with the Contract Documents. .

15. *Contract Times*—The number of days or the dates by which Contractor shall: (a) achieve Milestones, if any; (b) achieve Substantial Completion; and (c) complete the Work.

16. *Contractor*—The individual or entity with which Owner has contracted for performance of the Work.

17. *Cost of the Work*—See Paragraph 13.01 for definition.

18. *Drawings*—The part of the Contract that graphically shows the scope, extent, and character of the Work to be performed by Contractor.

19. *Effective Date of the Contract*—The date, indicated in the Agreement, on which the Contract becomes effective.

20. *Engineer*—The individual or entity named as such in the Agreement.

21. *Field Order*—A written order issued by Engineer which requires minor changes in the Work but does not change the Contract Price or the Contract Times.

22. *Hazardous Environmental Condition*—The presence at the Site of Constituents of Concern in such quantities or circumstances that may present a danger to persons or property exposed thereto. The presence at the Site of materials that are necessary for the execution of the Work, or that are to be incorporated in the Work, and that are controlled and contained pursuant to industry practices, Laws and Regulations, and the requirements of the Contract, does not establish a Hazardous Environmental Condition.

23. *Laws and Regulations; Laws or Regulations*—Any and all applicable laws, statutes, rules, regulations, ordinances, codes, and orders of any and all governmental bodies, agencies, authorities, and courts having jurisdiction.

Copyright © 2013 National Society of Professional Engineers, American Council of Engineering Companies, and American Society of Civil Engineers. All rights reserved.

24. *Liens*—Charges, security interests, or encumbrances upon Contract-related funds, real property, or personal property.

25. *Milestone*—A principal event in the performance of the Work that the Contract requires Contractor to achieve by an intermediate completion date or by a time prior to Substantial Completion of all the Work.

26. *Notice of Award*—The written notice by Owner to a Bidder of Owner's acceptance of the Bid.

27. *Notice to Proceed*—A written notice by Owner to Contractor fixing the date on which the Contract Times will commence to run and on which Contractor shall start to perform the Work.

28. *Owner*—The individual or entity with which Contractor has contracted regarding the Work, and which has agreed to pay Contractor for the performance of the Work, pursuant to the terms of the Contract.

29. *Progress Schedule*—A schedule, prepared and maintained by Contractor, describing the sequence and duration of the activities comprising the Contractor's plan to accomplish the Work within the Contract Times.

30. *Project*—The total undertaking to be accomplished for Owner by engineers, contractors, and others, including planning, study, design, construction, testing, commissioning, and start-up, and of which the Work to be performed under the Contract Documents is a part.

31. *Project Manual*—The written documents prepared for, or made available for, procuring and constructing the Work, including but not limited to the Bidding Documents or other construction procurement documents, geotechnical and existing conditions information, the Agreement, bond forms, General Conditions, Supplementary Conditions, and Specifications. The contents of the Project Manual may be bound in one or more volumes.

32. *Resident Project Representative*—The authorized representative of Engineer assigned to assist Engineer at the Site. As used herein, the term Resident Project Representative or "RPR" includes any assistants or field staff of Resident Project Representative.

33. *Samples*—Physical examples of materials, equipment, or workmanship that are representative of some portion of the Work and that establish the standards by which such portion of the Work will be judged.

34. *Schedule of Submittals*—A schedule, prepared and maintained by Contractor, of required submittals and the time requirements for Engineer's review of the submittals and the performance of related construction activities.

35. *Schedule of Values*—A schedule, prepared and maintained by Contractor, allocating portions of the Contract Price to various portions of the Work and used as the basis for reviewing Contractor's Applications for Payment.

36. *Shop Drawings*—All drawings, diagrams, illustrations, schedules, and other data or information that are specifically prepared or assembled by or for Contractor and submitted by Contractor to illustrate some portion of the Work. Shop Drawings, whether approved or not, are not Drawings and are not Contract Documents.

Copyright © 2013 National Society of Professional Engineers, American Council of Engineering Companies, and American Society of Civil Engineers. All rights reserved.

37. *Site*—Lands or areas indicated in the Contract Documents as being furnished by Owner upon which the Work is to be performed, including rights-of-way and easements, and such other lands furnished by Owner which are designated for the use of Contractor.

38. *Specifications*—The part of the Contract that consists of written requirements for materials, equipment, systems, standards, and workmanship as applied to the Work, and certain administrative requirements and procedural matters applicable to the Work.

39. *Subcontractor*—An individual or entity having a direct contract with Contractor or with any other Subcontractor for the performance of a part of the Work.

40. *Substantial Completion*—The time at which the Work (or a specified part thereof) has progressed to the point where, in the opinion of Engineer, the Work (or a specified part thereof) is sufficiently complete, in accordance with the Contract Documents, so that the Work (or a specified part thereof) can be utilized for the purposes for which it is intended. The terms "substantially complete" and "substantially completed" as applied to all or part of the Work refer to Substantial Completion thereof.

41. *Successful Bidder*—The Bidder whose Bid the Owner accepts, and to which the Owner makes an award of contract, subject to stated conditions.

42. *Supplementary Conditions*—The part of the Contract that amends or supplements these General Conditions.

43. *Supplier*—A manufacturer, fabricator, supplier, distributor, materialman, or vendor having a direct contract with Contractor or with any Subcontractor to furnish materials or equipment to be incorporated in the Work by Contractor or a Subcontractor.

44. *Technical Data*—Those items expressly identified as Technical Data in the Supplementary Conditions, with respect to either (a) subsurface conditions at the Site, or physical conditions relating to existing surface or subsurface structures at the Site (except Underground Facilities) or (b) Hazardous Environmental Conditions at the Site. If no such express identifications of Technical Data have been made with respect to conditions at the Site, then the data contained in boring logs, recorded measurements of subsurface water levels, laboratory test results, and other factual, objective information regarding conditions at the Site that are set forth in any geotechnical or environmental report prepared for the Project and made available to Contractor are hereby defined as Technical Data with respect to conditions at the Site under Paragraphs 5.03, 5.04, and 5.06.

45. *Underground Facilities*—All underground pipelines, conduits, ducts, cables, wires, manholes, vaults, tanks, tunnels, or other such facilities or attachments, and any encasements containing such facilities, including but not limited to those that convey electricity, gases, steam, liquid petroleum products, telephone or other communications, fiber optic transmissions, cable television, water, wastewater, storm water, other liquids or chemicals, or traffic or other control systems.

46. *Unit Price Work*—Work to be paid for on the basis of unit prices.

47. *Work*—The entire construction or the various separately identifiable parts thereof required to be provided under the Contract Documents. Work includes and is the result of performing or providing all labor, services, and documentation necessary to produce such construction; furnishing, installing, and incorporating all materials and equipment into such construction; and may include related services such as testing, start-up, and commissioning, all as required by the Contract Documents.

Copyright © 2013 National Society of Professional Engineers, American Council of Engineering Companies, and American Society of Civil Engineers. All rights reserved.

48. *Work Change Directive*—A written directive to Contractor issued on or after the Effective Date of the Contract, signed by Owner and recommended by Engineer, ordering an addition, deletion, or revision in the Work.

1.02 *Terminology*

A. The words and terms discussed in the following paragraphs are not defined but, when used in the Bidding Requirements or Contract Documents, have the indicated meaning.

B. *Intent of Certain Terms or Adjectives*:

1. The Contract Documents include the terms "as allowed," "as approved," "as ordered," "as directed" or terms of like effect or import to authorize an exercise of professional judgment by Engineer. In addition, the adjectives "reasonable," "suitable," "acceptable," "proper," "satisfactory," or adjectives of like effect or import are used to describe an action or determination of Engineer as to the Work. It is intended that such exercise of professional judgment, action, or determination will be solely to evaluate, in general, the Work for compliance with the information in the Contract Documents and with the design concept of the Project as a functioning whole as shown or indicated in the Contract Documents (unless there is a specific statement indicating otherwise). The use of any such term or adjective is not intended to and shall not be effective to assign to Engineer any duty or authority to supervise or direct the performance of the Work, or any duty or authority to undertake responsibility contrary to the provisions of Article 10 or any other provision of the Contract Documents.

C. *Day*:

1. The word "day" means a calendar day of 24 hours measured from midnight to the next midnight.

D. *Defective*:

1. The word "defective," when modifying the word "Work," refers to Work that is unsatisfactory, faulty, or deficient in that it:

a. does not conform to the Contract Documents; or

b. does not meet the requirements of any applicable inspection, reference standard, test, or approval referred to in the Contract Documents; or

c. has been damaged prior to Engineer's recommendation of final payment (unless responsibility for the protection thereof has been assumed by Owner at Substantial Completion in accordance with Paragraph 15.03 or 15.04).

E. *Furnish, Install, Perform, Provide*:

1. The word "furnish," when used in connection with services, materials, or equipment, shall mean to supply and deliver said services, materials, or equipment to the Site (or some other specified location) ready for use or installation and in usable or operable condition.

2. The word "install," when used in connection with services, materials, or equipment, shall mean to put into use or place in final position said services, materials, or equipment complete and ready for intended use.

Copyright © 2013 National Society of Professional Engineers, American Council of Engineering Companies, and American Society of Civil Engineers. All rights reserved.

3. The words “perform” or “provide,” when used in connection with services, materials, or equipment, shall mean to furnish and install said services, materials, or equipment complete and ready for intended use.

4. If the Contract Documents establish an obligation of Contractor with respect to specific services, materials, or equipment, but do not expressly use any of the four words “furnish,” “install,” “perform,” or “provide,” then Contractor shall furnish and install said services, materials, or equipment complete and ready for intended use.

F. Unless stated otherwise in the Contract Documents, words or phrases that have a well-known technical or construction industry or trade meaning are used in the Contract Documents in accordance with such recognized meaning.

ARTICLE 2 – PRELIMINARY MATTERS

2.01 *Delivery of Bonds and Evidence of Insurance*

A. *Bonds*: When Contractor delivers the executed counterparts of the Agreement to Owner, Contractor shall also deliver to Owner such bonds as Contractor may be required to furnish.

B. *Evidence of Contractor’s Insurance*: When Contractor delivers the executed counterparts of the Agreement to Owner, Contractor shall also deliver to Owner, with copies to each named insured and additional insured (as identified in the Supplementary Conditions or elsewhere in the Contract), the certificates and other evidence of insurance required to be provided by Contractor in accordance with Article 6.

C. *Evidence of Owner’s Insurance*: After receipt of the executed counterparts of the Agreement and all required bonds and insurance documentation, Owner shall promptly deliver to Contractor, with copies to each named insured and additional insured (as identified in the Supplementary Conditions or otherwise), the certificates and other evidence of insurance required to be provided by Owner under Article 6.

2.02 *Copies of Documents*

A. Owner shall furnish to Contractor four printed copies of the Contract (including one fully executed counterpart of the Agreement), and one copy in electronic portable document format (PDF). Additional printed copies will be furnished upon request at the cost of reproduction.

B. Owner shall maintain and safeguard at least one original printed record version of the Contract, including Drawings and Specifications signed and sealed by Engineer and other design professionals. Owner shall make such original printed record version of the Contract available to Contractor for review. Owner may delegate the responsibilities under this provision to Engineer.

2.03 *Before Starting Construction*

A. *Preliminary Schedules*: Within 10 days after the Effective Date of the Contract (or as otherwise specifically required by the Contract Documents), Contractor shall submit to Engineer for timely review:

1. a preliminary Progress Schedule indicating the times (numbers of days or dates) for starting and completing the various stages of the Work, including any Milestones specified in the Contract;

2. a preliminary Schedule of Submittals; and

Copyright © 2013 National Society of Professional Engineers, American Council of Engineering Companies, and American Society of Civil Engineers. All rights reserved.

3. a preliminary Schedule of Values for all of the Work which includes quantities and prices of items which when added together equal the Contract Price and subdivides the Work into component parts in sufficient detail to serve as the basis for progress payments during performance of the Work. Such prices will include an appropriate amount of overhead and profit applicable to each item of Work.

2.04 *Preconstruction Conference; Designation of Authorized Representatives*

A. Before any Work at the Site is started, a conference attended by Owner, Contractor, Engineer, and others as appropriate will be held to establish a working understanding among the parties as to the Work and to discuss the schedules referred to in Paragraph 2.03.A, procedures for handling Shop Drawings, Samples, and other submittals, processing Applications for Payment, electronic or digital transmittals, and maintaining required records.

B. At this conference Owner and Contractor each shall designate, in writing, a specific individual to act as its authorized representative with respect to the services and responsibilities under the Contract. Such individuals shall have the authority to transmit and receive information, render decisions relative to the Contract, and otherwise act on behalf of each respective party.

2.05 *Initial Acceptance of Schedules*

A. At least 10 days before submission of the first Application for Payment a conference, attended by Contractor, Engineer, and others as appropriate, will be held to review for acceptability to Engineer as provided below the schedules submitted in accordance with Paragraph 2.03.A. Contractor shall have an additional 10 days to make corrections and adjustments and to complete and resubmit the schedules. No progress payment shall be made to Contractor until acceptable schedules are submitted to Engineer.

1. The Progress Schedule will be acceptable to Engineer if it provides an orderly progression of the Work to completion within the Contract Times. Such acceptance will not impose on Engineer responsibility for the Progress Schedule, for sequencing, scheduling, or progress of the Work, nor interfere with or relieve Contractor from Contractor's full responsibility therefor.

2. Contractor's Schedule of Submittals will be acceptable to Engineer if it provides a workable arrangement for reviewing and processing the required submittals.

3. Contractor's Schedule of Values will be acceptable to Engineer as to form and substance if it provides a reasonable allocation of the Contract Price to the component parts of the Work.

2.06 *Electronic Transmittals*

A. Except as otherwise stated elsewhere in the Contract, the Owner, Engineer, and Contractor may transmit, and shall accept, Project-related correspondence, text, data, documents, drawings, information, and graphics, including but not limited to Shop Drawings and other submittals, in electronic media or digital format, either directly, or through access to a secure Project website.

B. If the Contract does not establish protocols for electronic or digital transmittals, then Owner, Engineer, and Contractor shall jointly develop such protocols.

C. When transmitting items in electronic media or digital format, the transmitting party makes no representations as to long term compatibility, usability, or readability of the items resulting from the recipient's use of software application packages, operating systems, or

Copyright © 2013 National Society of Professional Engineers, American Council of Engineering Companies, and American Society of Civil Engineers. All rights reserved.

computer hardware differing from those used in the drafting or transmittal of the items, or from those established in applicable transmittal protocols.

ARTICLE 3 – DOCUMENTS: INTENT, REQUIREMENTS, REUSE

3.01 *Intent*

A. The Contract Documents are complementary; what is required by one is as binding as if required by all.

B. It is the intent of the Contract Documents to describe a functionally complete project (or part thereof) to be constructed in accordance with the Contract Documents.

C. Unless otherwise stated in the Contract Documents, if there is a discrepancy between the electronic or digital versions of the Contract Documents (including any printed copies derived from such electronic or digital versions) and the printed record version, the printed record version shall govern.

D. The Contract supersedes prior negotiations, representations, and agreements, whether written or oral.

E. Engineer will issue clarifications and interpretations of the Contract Documents as provided herein.

3.02 *Reference Standards*

A. Standards Specifications, Codes, Laws and Regulations

1. Reference in the Contract Documents to standard specifications, manuals, reference standards, or codes of any technical society, organization, or association, or to Laws or Regulations, whether such reference be specific or by implication, shall mean the standard specification, manual, reference standard, code, or Laws or Regulations in effect at the time of opening of Bids (or on the Effective Date of the Contract if there were no Bids), except as may be otherwise specifically stated in the Contract Documents.

2. No provision of any such standard specification, manual, reference standard, or code, or any instruction of a Supplier, shall be effective to change the duties or responsibilities of Owner, Contractor, or Engineer, or any of their subcontractors, consultants, agents, or employees, from those set forth in the part of the Contract Documents prepared by or for Engineer. No such provision or instruction shall be effective to assign to Owner, Engineer, or any of their officers, directors, members, partners, employees, agents, consultants, or subcontractors, any duty or authority to supervise or direct the performance of the Work or any duty or authority to undertake responsibility inconsistent with the provisions of the part of the Contract Documents prepared by or for Engineer.

3.03 *Reporting and Resolving Discrepancies*

A. *Reporting Discrepancies*:

1. *Contractor's Verification of Figures and Field Measurements*: Before undertaking each part of the Work, Contractor shall carefully study the Contract Documents, and check and verify pertinent figures and dimensions therein, particularly with respect to applicable field measurements. Contractor shall promptly report in writing to Engineer any conflict, error, ambiguity, or discrepancy that Contractor discovers, or has actual knowledge of, and shall not proceed with any Work affected thereby until the conflict,

Copyright © 2013 National Society of Professional Engineers, American Council of Engineering Companies, and American Society of Civil Engineers. All rights reserved.

error, ambiguity, or discrepancy is resolved, by a clarification or interpretation by Engineer, or by an amendment or supplement to the Contract Documents issued pursuant to Paragraph 11.01.

2. *Contractor's Review of Contract Documents*: If, before or during the performance of the Work, Contractor discovers any conflict, error, ambiguity, or discrepancy within the Contract Documents, or between the Contract Documents and (a) any applicable Law or Regulation, (b) actual field conditions, (c) any standard specification, manual, reference standard, or code, or (d) any instruction of any Supplier, then Contractor shall promptly report it to Engineer in writing. Contractor shall not proceed with the Work affected thereby (except in an emergency as required by Paragraph 7.15) until the conflict, error, ambiguity, or discrepancy is resolved, by a clarification or interpretation by Engineer, or by an amendment or supplement to the Contract Documents issued pursuant to Paragraph 11.01.

3. Contractor shall not be liable to Owner or Engineer for failure to report any conflict, error, ambiguity, or discrepancy in the Contract Documents unless Contractor had actual knowledge thereof.

B. *Resolving Discrepancies*:

1. Except as may be otherwise specifically stated in the Contract Documents, the provisions of the part of the Contract Documents prepared by or for Engineer shall take precedence in resolving any conflict, error, ambiguity, or discrepancy between such provisions of the Contract Documents and:

   a. the provisions of any standard specification, manual, reference standard, or code, or the instruction of any Supplier (whether or not specifically incorporated by reference as a Contract Document); or

   b. the provisions of any Laws or Regulations applicable to the performance of the Work (unless such an interpretation of the provisions of the Contract Documents would result in violation of such Law or Regulation).

3.04 *Requirements of the Contract Documents*

A. During the performance of the Work and until final payment, Contractor and Owner shall submit to the Engineer all matters in question concerning the requirements of the Contract Documents (sometimes referred to as requests for information or interpretation—RFIs), or relating to the acceptability of the Work under the Contract Documents, as soon as possible after such matters arise. Engineer will be the initial interpreter of the requirements of the Contract Documents, and judge of the acceptability of the Work thereunder.

B. Engineer will, with reasonable promptness, render a written clarification, interpretation, or decision on the issue submitted, or initiate an amendment or supplement to the Contract Documents. Engineer's written clarification, interpretation, or decision will be final and binding on Contractor, unless it appeals by submitting a Change Proposal, and on Owner, unless it appeals by filing a Claim.

C. If a submitted matter in question concerns terms and conditions of the Contract Documents that do not involve (1) the performance or acceptability of the Work under the Contract Documents, (2) the design (as set forth in the Drawings, Specifications, or otherwise), or (3) other engineering or technical matters, then Engineer will promptly give written notice to Owner and Contractor that Engineer is unable to provide a decision or interpretation. If Owner and Contractor are unable to agree on resolution of such a matter in question, either party may pursue resolution as provided in Article 12.

Copyright © 2013 National Society of Professional Engineers, American Council of Engineering Companies, and American Society of Civil Engineers. All rights reserved.

3.05 *Reuse of Documents*

A. Contractor and its Subcontractors and Suppliers shall not:

1. have or acquire any title to or ownership rights in any of the Drawings, Specifications, or other documents (or copies of any thereof) prepared by or bearing the seal of Engineer or its consultants, including electronic media editions, or reuse any such Drawings, Specifications, other documents, or copies thereof on extensions of the Project or any other project without written consent of Owner and Engineer and specific written verification or adaptation by Engineer; or

2. have or acquire any title or ownership rights in any other Contract Documents, reuse any such Contract Documents for any purpose without Owner's express written consent, or violate any copyrights pertaining to such Contract Documents.

B. The prohibitions of this Paragraph 3.05 will survive final payment, or termination of the Contract. Nothing herein shall preclude Contractor from retaining copies of the Contract Documents for record purposes.

ARTICLE 4 – COMMENCEMENT AND PROGRESS OF THE WORK

4.01 *Commencement of Contract Times; Notice to Proceed*

A. The Contract Times will commence to run on the thirtieth day after the Effective Date of the Contract or, if a Notice to Proceed is given, on the day indicated in the Notice to Proceed. A Notice to Proceed may be given at any time within 30 days after the Effective Date of the Contract. In no event will the Contract Times commence to run later than the sixtieth day after the day of Bid opening or the thirtieth day after the Effective Date of the Contract, whichever date is earlier.

4.02 *Starting the Work*

A. Contractor shall start to perform the Work on the date when the Contract Times commence to run. No Work shall be done at the Site prior to such date.

4.03 *Reference Points*

A. Owner shall provide engineering surveys to establish reference points for construction which in Engineer's judgment are necessary to enable Contractor to proceed with the Work. Contractor shall be responsible for laying out the Work, shall protect and preserve the established reference points and property monuments, and shall make no changes or relocations without the prior written approval of Owner. Contractor shall report to Engineer whenever any reference point or property monument is lost or destroyed or requires relocation because of necessary changes in grades or locations, and shall be responsible for the accurate replacement or relocation of such reference points or property monuments by professionally qualified personnel.

4.04 *Progress Schedule*

A. Contractor shall adhere to the Progress Schedule established in accordance with Paragraph 2.05 as it may be adjusted from time to time as provided below.

1. Contractor shall submit to Engineer for acceptance (to the extent indicated in Paragraph 2.05) proposed adjustments in the Progress Schedule that will not result in changing the Contract Times.

Copyright © 2013 National Society of Professional Engineers, American Council of Engineering Companies, and American Society of Civil Engineers. All rights reserved.

2. Proposed adjustments in the Progress Schedule that will change the Contract Times shall be submitted in accordance with the requirements of Article 11.

B. Contractor shall carry on the Work and adhere to the Progress Schedule during all disputes or disagreements with Owner. No Work shall be delayed or postponed pending resolution of any disputes or disagreements, or during any appeal process, except as permitted by Paragraph 16.04, or as Owner and Contractor may otherwise agree in writing.

4.05 *Delays in Contractor's Progress*

A. If Owner, Engineer, or anyone for whom Owner is responsible, delays, disrupts, or interferes with the performance or progress of the Work, then Contractor shall be entitled to an equitable adjustment in the Contract Times and Contract Price. Contractor's entitlement to an adjustment of the Contract Times is conditioned on such adjustment being essential to Contractor's ability to complete the Work within the Contract Times.

B. Contractor shall not be entitled to an adjustment in Contract Price or Contract Times for delay, disruption, or interference caused by or within the control of Contractor. Delay, disruption, and interference attributable to and within the control of a Subcontractor or Supplier shall be deemed to be within the control of Contractor.

C. If Contractor's performance or progress is delayed, disrupted, or interfered with by unanticipated causes not the fault of and beyond the control of Owner, Contractor, and those for which they are responsible, then Contractor shall be entitled to an equitable adjustment in Contract Times. Contractor's entitlement to an adjustment of the Contract Times is conditioned on such adjustment being essential to Contractor's ability to complete the Work within the Contract Times. Such an adjustment shall be Contractor's sole and exclusive remedy for the delays, disruption, and interference described in this paragraph. Causes of delay, disruption, or interference that may give rise to an adjustment in Contract Times under this paragraph include but are not limited to the following:

1. severe and unavoidable natural catastrophes such as fires, floods, epidemics, and earthquakes;

2. abnormal weather conditions;

3. acts or failures to act of utility owners (other than those performing other work at or adjacent to the Site by arrangement with the Owner, as contemplated in Article 8); and

4. acts of war or terrorism.

D. Delays, disruption, and interference to the performance or progress of the Work resulting from the existence of a differing subsurface or physical condition, an Underground Facility that was not shown or indicated by the Contract Documents, or not shown or indicated with reasonable accuracy, and those resulting from Hazardous Environmental Conditions, are governed by Article 5.

E. Paragraph 8.03 governs delays, disruption, and interference to the performance or progress of the Work resulting from the performance of certain other work at or adjacent to the Site.

F. Contractor shall not be entitled to an adjustment in Contract Price or Contract Times for any delay, disruption, or interference if such delay is concurrent with a delay, disruption, or interference caused by or within the control of Contractor.

Copyright © 2013 National Society of Professional Engineers, American Council of Engineering Companies, and American Society of Civil Engineers. All rights reserved.

G. Contractor must submit any Change Proposal seeking an adjustment in Contract Price or Contract Times under this paragraph within 30 days of the commencement of the delaying, disrupting, or interfering event.

ARTICLE 5 – AVAILABILITY OF LANDS; SUBSURFACE AND PHYSICAL CONDITIONS; HAZARDOUS ENVIRONMENTAL CONDITIONS

5.01 *Availability of Lands*

A. Owner shall furnish the Site. Owner shall notify Contractor of any encumbrances or restrictions not of general application but specifically related to use of the Site with which Contractor must comply in performing the Work.

B. Upon reasonable written request, Owner shall furnish Contractor with a current statement of record legal title and legal description of the lands upon which permanent improvements are to be made and Owner's interest therein as necessary for giving notice of or filing a mechanic's or construction lien against such lands in accordance with applicable Laws and Regulations.

C. Contractor shall provide for all additional lands and access thereto that may be required for temporary construction facilities or storage of materials and equipment.

5.02 *Use of Site and Other Areas*

A. *Limitation on Use of Site and Other Areas*:

1. Contractor shall confine construction equipment, temporary construction facilities, the storage of materials and equipment, and the operations of workers to the Site, adjacent areas that Contractor has arranged to use through construction easements or otherwise, and other adjacent areas permitted by Laws and Regulations, and shall not unreasonably encumber the Site and such other adjacent areas with construction equipment or other materials or equipment. Contractor shall assume full responsibility for (a) damage to the Site; (b) damage to any such other adjacent areas used for Contractor's operations; (c) damage to any other adjacent land or areas; and (d) for injuries and losses sustained by the owners or occupants of any such land or areas; provided that such damage or injuries result from the performance of the Work or from other actions or conduct of the Contractor or those for which Contractor is responsible.

2. If a damage or injury claim is made by the owner or occupant of any such land or area because of the performance of the Work, or because of other actions or conduct of the Contractor or those for which Contractor is responsible, Contractor shall (a) take immediate corrective or remedial action as required by Paragraph 7.12, or otherwise; (b) promptly attempt to settle the claim as to all parties through negotiations with such owner or occupant, or otherwise resolve the claim by arbitration or other dispute resolution proceeding, or at law; and (c) to the fullest extent permitted by Laws and Regulations, indemnify and hold harmless Owner and Engineer, and the officers, directors, members, partners, employees, agents, consultants and subcontractors of each and any of them from and against any such claim, and against all costs, losses, and damages (including but not limited to all fees and charges of engineers, architects, attorneys, and other professionals and all court or arbitration or other dispute resolution costs) arising out of or relating to any claim or action, legal or equitable, brought by any such owner or occupant against Owner, Engineer, or any other party indemnified hereunder to the extent caused directly or indirectly, in whole or in part

Copyright © 2013 National Society of Professional Engineers, American Council of Engineering Companies, and American Society of Civil Engineers. All rights reserved.

by, or based upon, Contractor's performance of the Work, or because of other actions or conduct of the Contractor or those for which Contractor is responsible.

B. *Removal of Debris During Performance of the Work*: During the progress of the Work the Contractor shall keep the Site and other adjacent areas free from accumulations of waste materials, rubbish, and other debris. Removal and disposal of such waste materials, rubbish, and other debris shall conform to applicable Laws and Regulations.

C. *Cleaning*: Prior to Substantial Completion of the Work Contractor shall clean the Site and the Work and make it ready for utilization by Owner. At the completion of the Work Contractor shall remove from the Site and adjacent areas all tools, appliances, construction equipment and machinery, and surplus materials and shall restore to original condition all property not designated for alteration by the Contract Documents.

D. *Loading of Structures*: Contractor shall not load nor permit any part of any structure to be loaded in any manner that will endanger the structure, nor shall Contractor subject any part of the Work or adjacent structures or land to stresses or pressures that will endanger them.

5.03 *Subsurface and Physical Conditions*

A. *Reports and Drawings*: The Supplementary Conditions identify:

1. those reports known to Owner of explorations and tests of subsurface conditions at or adjacent to the Site;

2. those drawings known to Owner of physical conditions relating to existing surface or subsurface structures at the Site (except Underground Facilities); and

3. Technical Data contained in such reports and drawings.

B. *Reliance by Contractor on Technical Data Authorized*: Contractor may rely upon the accuracy of the Technical Data expressly identified in the Supplementary Conditions with respect to such reports and drawings, but such reports and drawings are not Contract Documents. If no such express identification has been made, then Contractor may rely upon the accuracy of the Technical Data (as defined in Article 1) contained in any geotechnical or environmental report prepared for the Project and made available to Contractor. Except for such reliance on Technical Data, Contractor may not rely upon or make any claim against Owner or Engineer, or any of their officers, directors, members, partners, employees, agents, consultants, or subcontractors, with respect to:

1. the completeness of such reports and drawings for Contractor's purposes, including, but not limited to, any aspects of the means, methods, techniques, sequences, and procedures of construction to be employed by Contractor, and safety precautions and programs incident thereto; or

2. other data, interpretations, opinions, and information contained in such reports or shown or indicated in such drawings; or

3. any Contractor interpretation of or conclusion drawn from any Technical Data or any such other data, interpretations, opinions, or information.

Copyright © 2013 National Society of Professional Engineers, American Council of Engineering Companies, and American Society of Civil Engineers. All rights reserved.

5.04 *Differing Subsurface or Physical Conditions*

A. *Notice by Contractor*: If Contractor believes that any subsurface or physical condition that is uncovered or revealed at the Site either:

1. is of such a nature as to establish that any Technical Data on which Contractor is entitled to rely as provided in Paragraph 5.03 is materially inaccurate; or

2. is of such a nature as to require a change in the Drawings or Specifications; or

3. differs materially from that shown or indicated in the Contract Documents; or

4. is of an unusual nature, and differs materially from conditions ordinarily encountered and generally recognized as inherent in work of the character provided for in the Contract Documents;

then Contractor shall, promptly after becoming aware thereof and before further disturbing the subsurface or physical conditions or performing any Work in connection therewith (except in an emergency as required by Paragraph 7.15), notify Owner and Engineer in writing about such condition. Contractor shall not further disturb such condition or perform any Work in connection therewith (except with respect to an emergency) until receipt of a written statement permitting Contractor to do so.

B. *Engineer's Review*: After receipt of written notice as required by the preceding paragraph, Engineer will promptly review the subsurface or physical condition in question; determine the necessity of Owner's obtaining additional exploration or tests with respect to the condition; conclude whether the condition falls within any one or more of the differing site condition categories in Paragraph 5.04.A above; obtain any pertinent cost or schedule information from Contractor; prepare recommendations to Owner regarding the Contractor's resumption of Work in connection with the subsurface or physical condition in question and the need for any change in the Drawings or Specifications; and advise Owner in writing of Engineer's findings, conclusions, and recommendations.

C. *Owner's Statement to Contractor Regarding Site Condition*: After receipt of Engineer's written findings, conclusions, and recommendations, Owner shall issue a written statement to Contractor (with a copy to Engineer) regarding the subsurface or physical condition in question, addressing the resumption of Work in connection with such condition, indicating whether any change in the Drawings or Specifications will be made, and adopting or rejecting Engineer's written findings, conclusions, and recommendations, in whole or in part.

D. *Possible Price and Times Adjustments*:

1. Contractor shall be entitled to an equitable adjustment in Contract Price or Contract Times, or both, to the extent that the existence of a differing subsurface or physical condition, or any related delay, disruption, or interference, causes an increase or decrease in Contractor's cost of, or time required for, performance of the Work; subject, however, to the following:

a. such condition must fall within any one or more of the categories described in Paragraph 5.04.A;

b. with respect to Work that is paid for on a unit price basis, any adjustment in Contract Price will be subject to the provisions of Paragraph 13.03; and,

Copyright © 2013 National Society of Professional Engineers, American Council of Engineering Companies, and American Society of Civil Engineers. All rights reserved.

c. Contractor's entitlement to an adjustment of the Contract Times is conditioned on such adjustment being essential to Contractor's ability to complete the Work within the Contract Times.

2. Contractor shall not be entitled to any adjustment in the Contract Price or Contract Times with respect to a subsurface or physical condition if:

a. Contractor knew of the existence of such condition at the time Contractor made a commitment to Owner with respect to Contract Price and Contract Times by the submission of a Bid or becoming bound under a negotiated contract, or otherwise; or

b. the existence of such condition reasonably could have been discovered or revealed as a result of any examination, investigation, exploration, test, or study of the Site and contiguous areas expressly required by the Bidding Requirements or Contract Documents to be conducted by or for Contractor prior to Contractor's making such commitment; or

c. Contractor failed to give the written notice as required by Paragraph 5.04.A.

3. If Owner and Contractor agree regarding Contractor's entitlement to and the amount or extent of any adjustment in the Contract Price or Contract Times, or both, then any such adjustment shall be set forth in a Change Order.

4. Contractor may submit a Change Proposal regarding its entitlement to or the amount or extent of any adjustment in the Contract Price or Contract Times, or both, no later than 30 days after Owner's issuance of the Owner's written statement to Contractor regarding the subsurface or physical condition in question.

5.05 *Underground Facilities*

A. *Contractor's Responsibilities*: The information and data shown or indicated in the Contract Documents with respect to existing Underground Facilities at or adjacent to the Site is based on information and data furnished to Owner or Engineer by the owners of such Underground Facilities, including Owner, or by others. Unless it is otherwise expressly provided in the Supplementary Conditions:

1. Owner and Engineer do not warrant or guarantee the accuracy or completeness of any such information or data provided by others; and

2. the cost of all of the following will be included in the Contract Price, and Contractor shall have full responsibility for:

a. reviewing and checking all information and data regarding existing Underground Facilities at the Site;

b. locating all Underground Facilities shown or indicated in the Contract Documents as being at the Site;

c. coordination of the Work with the owners (including Owner) of such Underground Facilities, during construction; and

d. the safety and protection of all existing Underground Facilities at the Site, and repairing any damage thereto resulting from the Work.

B. *Notice by Contractor*: If Contractor believes that an Underground Facility that is uncovered or revealed at the Site was not shown or indicated in the Contract Documents, or was not shown or indicated with reasonable accuracy, then Contractor shall, promptly after

Copyright © 2013 National Society of Professional Engineers, American Council of Engineering Companies, and American Society of Civil Engineers. All rights reserved.

becoming aware thereof and before further disturbing conditions affected thereby or performing any Work in connection therewith (except in an emergency as required by Paragraph 7.15), identify the owner of such Underground Facility and give written notice to that owner and to Owner and Engineer.

C. *Engineer's Review*: Engineer will promptly review the Underground Facility and conclude whether such Underground Facility was not shown or indicated in the Contract Documents, or was not shown or indicated with reasonable accuracy; obtain any pertinent cost or schedule information from Contractor; prepare recommendations to Owner regarding the Contractor's resumption of Work in connection with the Underground Facility in question; determine the extent, if any, to which a change is required in the Drawings or Specifications to reflect and document the consequences of the existence or location of the Underground Facility; and advise Owner in writing of Engineer's findings, conclusions, and recommendations. During such time, Contractor shall be responsible for the safety and protection of such Underground Facility.

D. *Owner's Statement to Contractor Regarding Underground Facility*: After receipt of Engineer's written findings, conclusions, and recommendations, Owner shall issue a written statement to Contractor (with a copy to Engineer) regarding the Underground Facility in question, addressing the resumption of Work in connection with such Underground Facility, indicating whether any change in the Drawings or Specifications will be made, and adopting or rejecting Engineer's written findings, conclusions, and recommendations in whole or in part.

E. *Possible Price and Times Adjustments*:

1. Contractor shall be entitled to an equitable adjustment in the Contract Price or Contract Times, or both, to the extent that any existing Underground Facility at the Site that was not shown or indicated in the Contract Documents, or was not shown or indicated with reasonable accuracy, or any related delay, disruption, or interference, causes an increase or decrease in Contractor's cost of, or time required for, performance of the Work; subject, however, to the following:

    a. Contractor did not know of and could not reasonably have been expected to be aware of or to have anticipated the existence or actual location of the Underground Facility in question;

    b. With respect to Work that is paid for on a unit price basis, any adjustment in Contract Price will be subject to the provisions of Paragraph 13.03;

    c. Contractor's entitlement to an adjustment of the Contract Times is conditioned on such adjustment being essential to Contractor's ability to complete the Work within the Contract Times; and

    d. Contractor gave the notice required in Paragraph 5.05.B.

2. If Owner and Contractor agree regarding Contractor's entitlement to and the amount or extent of any adjustment in the Contract Price or Contract Times, or both, then any such adjustment shall be set forth in a Change Order.

3. Contractor may submit a Change Proposal regarding its entitlement to or the amount or extent of any adjustment in the Contract Price or Contract Times, or both, no later than 30 days after Owner's issuance of the Owner's written statement to Contractor regarding the Underground Facility in question.

Copyright © 2013 National Society of Professional Engineers, American Council of Engineering Companies, and American Society of Civil Engineers. All rights reserved.

5.06 *Hazardous Environmental Conditions at Site*

A. *Reports and Drawings*: The Supplementary Conditions identify:

1. those reports and drawings known to Owner relating to Hazardous Environmental Conditions that have been identified at or adjacent to the Site; and

2. Technical Data contained in such reports and drawings.

B. *Reliance by Contractor on Technical Data Authorized*: Contractor may rely upon the accuracy of the Technical Data expressly identified in the Supplementary Conditions with respect to such reports and drawings, but such reports and drawings are not Contract Documents. If no such express identification has been made, then Contractor may rely on the accuracy of the Technical Data (as defined in Article 1) contained in any geotechnical or environmental report prepared for the Project and made available to Contractor. Except for such reliance on Technical Data, Contractor may not rely upon or make any claim against Owner or Engineer, or any of their officers, directors, members, partners, employees, agents, consultants, or subcontractors with respect to:

1. the completeness of such reports and drawings for Contractor's purposes, including, but not limited to, any aspects of the means, methods, techniques, sequences and procedures of construction to be employed by Contractor and safety precautions and programs incident thereto; or

2. other data, interpretations, opinions and information contained in such reports or shown or indicated in such drawings; or

3. any Contractor interpretation of or conclusion drawn from any Technical Data or any such other data, interpretations, opinions or information.

C. Contractor shall not be responsible for removing or remediating any Hazardous Environmental Condition encountered, uncovered, or revealed at the Site unless such removal or remediation is expressly identified in the Contract Documents to be within the scope of the Work.

D. Contractor shall be responsible for controlling, containing, and duly removing all Constituents of Concern brought to the Site by Contractor, Subcontractors, Suppliers, or anyone else for whom Contractor is responsible, and for any associated costs; and for the costs of removing and remediating any Hazardous Environmental Condition created by the presence of any such Constituents of Concern.

E. If Contractor encounters, uncovers, or reveals a Hazardous Environmental Condition whose removal or remediation is not expressly identified in the Contract Documents as being within the scope of the Work, or if Contractor or anyone for whom Contractor is responsible creates a Hazardous Environmental Condition, then Contractor shall immediately: (1) secure or otherwise isolate such condition; (2) stop all Work in connection with such condition and in any area affected thereby (except in an emergency as required by Paragraph 7.15); and (3) notify Owner and Engineer (and promptly thereafter confirm such notice in writing). Owner shall promptly consult with Engineer concerning the necessity for Owner to retain a qualified expert to evaluate such condition or take corrective action, if any. Promptly after consulting with Engineer, Owner shall take such actions as are necessary to permit Owner to timely obtain required permits and provide Contractor the written notice required by Paragraph 5.06.F. If Contractor or anyone for whom Contractor is responsible created the Hazardous Environmental Condition in question, then Owner may remove and remediate the Hazardous Environmental Condition, and impose a set-off against payments to account for the associated costs.

Copyright © 2013 National Society of Professional Engineers, American Council of Engineering Companies, and American Society of Civil Engineers. All rights reserved.

F. Contractor shall not resume Work in connection with such Hazardous Environmental Condition or in any affected area until after Owner has obtained any required permits related thereto, and delivered written notice to Contractor either (1) specifying that such condition and any affected area is or has been rendered safe for the resumption of Work, or (2) specifying any special conditions under which such Work may be resumed safely.

G. If Owner and Contractor cannot agree as to entitlement to or on the amount or extent, if any, of any adjustment in Contract Price or Contract Times, or both, as a result of such Work stoppage or such special conditions under which Work is agreed to be resumed by Contractor, then within 30 days of Owner's written notice regarding the resumption of Work, Contractor may submit a Change Proposal, or Owner may impose a set-off.

H. If after receipt of such written notice Contractor does not agree to resume such Work based on a reasonable belief it is unsafe, or does not agree to resume such Work under such special conditions, then Owner may order the portion of the Work that is in the area affected by such condition to be deleted from the Work, following the contractual change procedures in Article 11. Owner may have such deleted portion of the Work performed by Owner's own forces or others in accordance with Article 8.

I. To the fullest extent permitted by Laws and Regulations, Owner shall indemnify and hold harmless Contractor, Subcontractors, and Engineer, and the officers, directors, members, partners, employees, agents, consultants, and subcontractors of each and any of them from and against all claims, costs, losses, and damages (including but not limited to all fees and charges of engineers, architects, attorneys, and other professionals and all court or arbitration or other dispute resolution costs) arising out of or relating to a Hazardous Environmental Condition, provided that such Hazardous Environmental Condition (1) was not shown or indicated in the Drawings, Specifications, or other Contract Documents, identified as Technical Data entitled to limited reliance pursuant to Paragraph 5.06.B, or identified in the Contract Documents to be included within the scope of the Work, and (2) was not created by Contractor or by anyone for whom Contractor is responsible. Nothing in this Paragraph 5.06.I shall obligate Owner to indemnify any individual or entity from and against the consequences of that individual's or entity's own negligence.

J. To the fullest extent permitted by Laws and Regulations, Contractor shall indemnify and hold harmless Owner and Engineer, and the officers, directors, members, partners, employees, agents, consultants, and subcontractors of each and any of them from and against all claims, costs, losses, and damages (including but not limited to all fees and charges of engineers, architects, attorneys, and other professionals and all court or arbitration or other dispute resolution costs) arising out of or relating to the failure to control, contain, or remove a Constituent of Concern brought to the Site by Contractor or by anyone for whom Contractor is responsible, or to a Hazardous Environmental Condition created by Contractor or by anyone for whom Contractor is responsible. Nothing in this Paragraph 5.06.J shall obligate Contractor to indemnify any individual or entity from and against the consequences of that individual's or entity's own negligence.

K. The provisions of Paragraphs 5.03, 5.04, and 5.05 do not apply to the presence of Constituents of Concern or to a Hazardous Environmental Condition uncovered or revealed at the Site.

Copyright © 2013 National Society of Professional Engineers, American Council of Engineering Companies, and American Society of Civil Engineers. All rights reserved.

ARTICLE 6 – BONDS AND INSURANCE

6.01 *Performance, Payment, and Other Bonds*

A. Contractor shall furnish a performance bond and a payment bond, each in an amount at least equal to the Contract Price, as security for the faithful performance and payment of all of Contractor's obligations under the Contract. These bonds shall remain in effect until one year after the date when final payment becomes due or until completion of the correction period specified in Paragraph 15.08, whichever is later, except as provided otherwise by Laws or Regulations, the Supplementary Conditions, or other specific provisions of the Contract. Contractor shall also furnish such other bonds as are required by the Supplementary Conditions or other specific provisions of the Contract.

B. All bonds shall be in the form prescribed by the Contract except as provided otherwise by Laws or Regulations, and shall be executed by such sureties as are named in "Companies Holding Certificates of Authority as Acceptable Sureties on Federal Bonds and as Acceptable Reinsuring Companies" as published in Circular 570 (as amended and supplemented) by the Financial Management Service, Surety Bond Branch, U.S. Department of the Treasury. A bond signed by an agent or attorney-in-fact must be accompanied by a certified copy of that individual's authority to bind the surety. The evidence of authority shall show that it is effective on the date the agent or attorney-in-fact signed the accompanying bond.

C. Contractor shall obtain the required bonds from surety companies that are duly licensed or authorized in the jurisdiction in which the Project is located to issue bonds in the required amounts.

D. If the surety on a bond furnished by Contractor is declared bankrupt or becomes insolvent, or its right to do business is terminated in any state or jurisdiction where any part of the Project is located, or the surety ceases to meet the requirements above, then Contractor shall promptly notify Owner and Engineer and shall, within 20 days after the event giving rise to such notification, provide another bond and surety, both of which shall comply with the bond and surety requirements above.

E. If Contractor has failed to obtain a required bond, Owner may exclude the Contractor from the Site and exercise Owner's termination rights under Article 16.

F. Upon request, Owner shall provide a copy of the payment bond to any Subcontractor, Supplier, or other person or entity claiming to have furnished labor or materials used in the performance of the Work.

6.02 *Insurance—General Provisions*

A. Owner and Contractor shall obtain and maintain insurance as required in this Article and in the Supplementary Conditions.

B. All insurance required by the Contract to be purchased and maintained by Owner or Contractor shall be obtained from insurance companies that are duly licensed or authorized, in the state or jurisdiction in which the Project is located, to issue insurance policies for the required limits and coverages. Unless a different standard is indicated in the Supplementary Conditions, all companies that provide insurance policies required under this Contract shall have an A.M. Best rating of A-VII or better.

C. Contractor shall deliver to Owner, with copies to each named insured and additional insured (as identified in this Article, in the Supplementary Conditions, or elsewhere in the Contract), certificates of insurance establishing that Contractor has obtained and is

Copyright © 2013 National Society of Professional Engineers, American Council of Engineering Companies, and American Society of Civil Engineers. All rights reserved.

maintaining the policies, coverages, and endorsements required by the Contract. Upon request by Owner or any other insured, Contractor shall also furnish other evidence of such required insurance, including but not limited to copies of policies and endorsements, and documentation of applicable self-insured retentions and deductibles. Contractor may block out (redact) any confidential premium or pricing information contained in any policy or endorsement furnished under this provision.

D. Owner shall deliver to Contractor, with copies to each named insured and additional insured (as identified in this Article, the Supplementary Conditions, or elsewhere in the Contract), certificates of insurance establishing that Owner has obtained and is maintaining the policies, coverages, and endorsements required of Owner by the Contract (if any). Upon request by Contractor or any other insured, Owner shall also provide other evidence of such required insurance (if any), including but not limited to copies of policies and endorsements, and documentation of applicable self-insured retentions and deductibles. Owner may block out (redact) any confidential premium or pricing information contained in any policy or endorsement furnished under this provision.

E. Failure of Owner or Contractor to demand such certificates or other evidence of the other party's full compliance with these insurance requirements, or failure of Owner or Contractor to identify a deficiency in compliance from the evidence provided, shall not be construed as a waiver of the other party's obligation to obtain and maintain such insurance.

F. If either party does not purchase or maintain all of the insurance required of such party by the Contract, such party shall notify the other party in writing of such failure to purchase prior to the start of the Work, or of such failure to maintain prior to any change in the required coverage.

G. If Contractor has failed to obtain and maintain required insurance, Owner may exclude the Contractor from the Site, impose an appropriate set-off against payment, and exercise Owner's termination rights under Article 16.

H. Without prejudice to any other right or remedy, if a party has failed to obtain required insurance, the other party may elect to obtain equivalent insurance to protect such other party's interests at the expense of the party who was required to provide such coverage, and the Contract Price shall be adjusted accordingly.

I. Owner does not represent that insurance coverage and limits established in this Contract necessarily will be adequate to protect Contractor or Contractor's interests.

J. The insurance and insurance limits required herein shall not be deemed as a limitation on Contractor's liability under the indemnities granted to Owner and other individuals and entities in the Contract.

6.03 *Contractor's Insurance*

A. *Workers' Compensation*: Contractor shall purchase and maintain workers' compensation and employer's liability insurance for:

1. claims under workers' compensation, disability benefits, and other similar employee benefit acts.

2. United States Longshoreman and Harbor Workers' Compensation Act and Jones Act coverage (if applicable).

3. claims for damages because of bodily injury, occupational sickness or disease, or death of Contractor's employees (by stop-gap endorsement in monopolist worker's compensation states).

Copyright © 2013 National Society of Professional Engineers, American Council of Engineering Companies, and American Society of Civil Engineers. All rights reserved.

4. Foreign voluntary worker compensation (if applicable).

B. *Commercial General Liability—Claims Covered*: Contractor shall purchase and maintain commercial general liability insurance, covering all operations by or on behalf of Contractor, on an occurrence basis, against:

1. claims for damages because of bodily injury, sickness or disease, or death of any person other than Contractor's employees.

2. claims for damages insured by reasonably available personal injury liability coverage.

3. claims for damages, other than to the Work itself, because of injury to or destruction of tangible property wherever located, including loss of use resulting therefrom.

C. *Commercial General Liability—Form and Content*: Contractor's commercial liability policy shall be written on a 1996 (or later) ISO commercial general liability form (occurrence form) and include the following coverages and endorsements:

1. Products and completed operations coverage:

   a. Such insurance shall be maintained for three years after final payment.

   b. Contractor shall furnish Owner and each other additional insured (as identified in the Supplementary Conditions or elsewhere in the Contract) evidence of continuation of such insurance at final payment and three years thereafter.

2. Blanket contractual liability coverage, to the extent permitted by law, including but not limited to coverage of Contractor's contractual indemnity obligations in Paragraph 7.18.

3. Broad form property damage coverage.

4. Severability of interest.

5. Underground, explosion, and collapse coverage.

6. Personal injury coverage.

7. Additional insured endorsements that include both ongoing operations and products and completed operations coverage through ISO Endorsements CG 20 10 10 01 and CG 20 37 10 01 (together); or CG 20 10 07 04 and CG 20 37 07 04 (together); or their equivalent.

8. For design professional additional insureds, ISO Endorsement CG 20 32 07 04, "Additional Insured—Engineers, Architects or Surveyors Not Engaged by the Named Insured" or its equivalent.

D. *Automobile liability*: Contractor shall purchase and maintain automobile liability insurance against claims for damages because of bodily injury or death of any person or property damage arising out of the ownership, maintenance, or use of any motor vehicle. The automobile liability policy shall be written on an occurrence basis.

E. *Umbrella or excess liability*: Contractor shall purchase and maintain umbrella or excess liability insurance written over the underlying employer's liability, commercial general liability, and automobile liability insurance described in the paragraphs above. Subject to industry-standard exclusions, the coverage afforded shall follow form as to each and every one of the underlying policies.

F. *Contractor's pollution liability insurance*: Contractor shall purchase and maintain a policy covering third-party injury and property damage claims, including clean-up costs, as a result

Copyright © 2013 National Society of Professional Engineers, American Council of Engineering Companies, and American Society of Civil Engineers. All rights reserved.

of pollution conditions arising from Contractor's operations and completed operations. This insurance shall be maintained for no less than three years after final completion.

G. *Additional insureds*: The Contractor's commercial general liability, automobile liability, umbrella or excess, and pollution liability policies shall include and list as additional insureds Owner and Engineer, and any individuals or entities identified in the Supplementary Conditions; include coverage for the respective officers, directors, members, partners, employees, agents, consultants, and subcontractors of each and any of all such additional insureds; and the insurance afforded to these additional insureds shall provide primary coverage for all claims covered thereby (including as applicable those arising from both ongoing and completed operations) on a non-contributory basis. Contractor shall obtain all necessary endorsements to support these requirements.

H. *Contractor's professional liability insurance*: If Contractor will provide or furnish professional services under this Contract, through a delegation of professional design services or otherwise, then Contractor shall be responsible for purchasing and maintaining applicable professional liability insurance. This insurance shall provide protection against claims arising out of performance of professional design or related services, and caused by a negligent error, omission, or act for which the insured party is legally liable. It shall be maintained throughout the duration of the Contract and for a minimum of two years after Substantial Completion. If such professional design services are performed by a Subcontractor, and not by Contractor itself, then the requirements of this paragraph may be satisfied through the purchasing and maintenance of such insurance by such Subcontractor.

I. *General provisions*: The policies of insurance required by this Paragraph 6.03 shall:

1. include at least the specific coverages provided in this Article.
2. be written for not less than the limits of liability provided in this Article and in the Supplementary Conditions, or required by Laws or Regulations, whichever is greater.
3. contain a provision or endorsement that the coverage afforded will not be canceled, materially changed, or renewal refused until at least 10 days prior written notice has been given to Contractor. Within three days of receipt of any such written notice, Contractor shall provide a copy of the notice to Owner, Engineer, and each other insured under the policy.
4. remain in effect at least until final payment (and longer if expressly required in this Article) and at all times thereafter when Contractor may be correcting, removing, or replacing defective Work as a warranty or correction obligation, or otherwise, or returning to the Site to conduct other tasks arising from the Contract Documents.
5. be appropriate for the Work being performed and provide protection from claims that may arise out of or result from Contractor's performance of the Work and Contractor's other obligations under the Contract Documents, whether it is to be performed by Contractor, any Subcontractor or Supplier, or by anyone directly or indirectly employed by any of them to perform any of the Work, or by anyone for whose acts any of them may be liable.

J. The coverage requirements for specific policies of insurance must be met by such policies, and not by reference to excess or umbrella insurance provided in other policies.

Copyright © 2013 National Society of Professional Engineers, American Council of Engineering Companies, and American Society of Civil Engineers. All rights reserved.

6.04 *Owner's Liability Insurance*

A. In addition to the insurance required to be provided by Contractor under Paragraph 6.03, Owner, at Owner's option, may purchase and maintain at Owner's expense Owner's own liability insurance as will protect Owner against claims which may arise from operations under the Contract Documents.

B. Owner's liability policies, if any, operate separately and independently from policies required to be provided by Contractor, and Contractor cannot rely upon Owner's liability policies for any of Contractor's obligations to the Owner, Engineer, or third parties.

6.05 *Property Insurance*

A. *Builder's Risk*: Unless otherwise provided in the Supplementary Conditions, Contractor shall purchase and maintain builder's risk insurance upon the Work on a completed value basis, in the amount of the full insurable replacement cost thereof (subject to such deductible amounts as may be provided in the Supplementary Conditions or required by Laws and Regulations). This insurance shall:

1. include the Owner and Contractor as named insureds, and all Subcontractors, and any individuals or entities required by the Supplementary Conditions to be insured under such builder's risk policy, as insureds or named insureds. For purposes of the remainder of this Paragraph 6.05, Paragraphs 6.06 and 6.07, and any corresponding Supplementary Conditions, the parties required to be insured shall collectively be referred to as "insureds."

2. be written on a builder's risk "all risk" policy form that shall at least include insurance for physical loss or damage to the Work, temporary buildings, falsework, and materials and equipment in transit, and shall insure against at least the following perils or causes of loss: fire; lightning; windstorm; riot; civil commotion; terrorism; vehicle impact; aircraft; smoke; theft; vandalism and malicious mischief; mechanical breakdown, boiler explosion, and artificially generated electric current; earthquake; volcanic activity, and other earth movement; flood; collapse; explosion; debris removal; demolition occasioned by enforcement of Laws and Regulations; water damage (other than that caused by flood); and such other perils or causes of loss as may be specifically required by the Supplementary Conditions. If insurance against mechanical breakdown, boiler explosion, and artificially generated electric current; earthquake; volcanic activity, and other earth movement; or flood, are not commercially available under builder's risk policies, by endorsement or otherwise, such insurance may be provided through other insurance policies acceptable to Owner and Contractor.

3. cover, as insured property, at least the following: (a) the Work and all materials, supplies, machinery, apparatus, equipment, fixtures, and other property of a similar nature that are to be incorporated into or used in the preparation, fabrication, construction, erection, or completion of the Work, including Owner-furnished or assigned property; (b) spare parts inventory required within the scope of the Contract; and (c) temporary works which are not intended to form part of the permanent constructed Work but which are intended to provide working access to the Site, or to the Work under construction, or which are intended to provide temporary support for the Work under construction, including scaffolding, form work, fences, shoring, falsework, and temporary structures.

4. cover expenses incurred in the repair or replacement of any insured property (including but not limited to fees and charges of engineers and architects).

Copyright © 2013 National Society of Professional Engineers, American Council of Engineering Companies, and American Society of Civil Engineers. All rights reserved.

5. extend to cover damage or loss to insured property while in temporary storage at the Site or in a storage location outside the Site (but not including property stored at the premises of a manufacturer or Supplier).
6. extend to cover damage or loss to insured property while in transit.
7. allow for partial occupation or use of the Work by Owner, such that those portions of the Work that are not yet occupied or used by Owner shall remain covered by the builder's risk insurance.
8. allow for the waiver of the insurer's subrogation rights, as set forth below.
9. provide primary coverage for all losses and damages caused by the perils or causes of loss covered.
10. not include a co-insurance clause.
11. include an exception for ensuing losses from physical damage or loss with respect to any defective workmanship, design, or materials exclusions.
12. include performance/hot testing and start-up.
13. be maintained in effect, subject to the provisions herein regarding Substantial Completion and partial occupancy or use of the Work by Owner, until the Work is complete.

B. *Notice of Cancellation or Change*: All the policies of insurance (and the certificates or other evidence thereof) required to be purchased and maintained in accordance with this Paragraph 6.05 will contain a provision or endorsement that the coverage afforded will not be canceled or materially changed or renewal refused until at least 10 days prior written notice has been given to the purchasing policyholder. Within three days of receipt of any such written notice, the purchasing policyholder shall provide a copy of the notice to each other insured.

C. *Deductibles*: The purchaser of any required builder's risk or property insurance shall pay for costs not covered because of the application of a policy deductible.

D. *Partial Occupancy or Use by Owner*: If Owner will occupy or use a portion or portions of the Work prior to Substantial Completion of all the Work as provided in Paragraph 15.04, then Owner (directly, if it is the purchaser of the builder's risk policy, or through Contractor) will provide notice of such occupancy or use to the builder's risk insurer. The builder's risk insurance shall not be canceled or permitted to lapse on account of any such partial use or occupancy; rather, those portions of the Work that are occupied or used by Owner may come off the builder's risk policy, while those portions of the Work not yet occupied or used by Owner shall remain covered by the builder's risk insurance.

E. *Additional Insurance*: If Contractor elects to obtain other special insurance to be included in or supplement the builder's risk or property insurance policies provided under this Paragraph 6.05, it may do so at Contractor's expense.

F. *Insurance of Other Property*: If the express insurance provisions of the Contract do not require or address the insurance of a property item or interest, such as tools, construction equipment, or other personal property owned by Contractor, a Subcontractor, or an employee of Contractor or a Subcontractor, then the entity or individual owning such property item will be responsible for deciding whether to insure it, and if so in what amount.

Copyright © 2013 National Society of Professional Engineers, American Council of Engineering Companies, and American Society of Civil Engineers. All rights reserved.

6.06 *Waiver of Rights*

A. All policies purchased in accordance with Paragraph 6.05, expressly including the builder's risk policy, shall contain provisions to the effect that in the event of payment of any loss or damage the insurers will have no rights of recovery against any insureds thereunder, or against Engineer or its consultants, or their officers, directors, members, partners, employees, agents, consultants, or subcontractors. Owner and Contractor waive all rights against each other and the respective officers, directors, members, partners, employees, agents, consultants, and subcontractors of each and any of them, for all losses and damages caused by, arising out of, or resulting from any of the perils or causes of loss covered by such policies and any other property insurance applicable to the Work; and, in addition, waive all such rights against Engineer, its consultants, all Subcontractors, all individuals or entities identified in the Supplementary Conditions as insureds, and the officers, directors, members, partners, employees, agents, consultants, and subcontractors of each and any of them, under such policies for losses and damages so caused. None of the above waivers shall extend to the rights that any party making such waiver may have to the proceeds of insurance held by Owner or Contractor as trustee or fiduciary, or otherwise payable under any policy so issued.

B. Owner waives all rights against Contractor, Subcontractors, and Engineer, and the officers, directors, members, partners, employees, agents, consultants and subcontractors of each and any of them, for:

1. loss due to business interruption, loss of use, or other consequential loss extending beyond direct physical loss or damage to Owner's property or the Work caused by, arising out of, or resulting from fire or other perils whether or not insured by Owner; and

2. loss or damage to the completed Project or part thereof caused by, arising out of, or resulting from fire or other insured peril or cause of loss covered by any property insurance maintained on the completed Project or part thereof by Owner during partial occupancy or use pursuant to Paragraph 15.04, after Substantial Completion pursuant to Paragraph 15.03, or after final payment pursuant to Paragraph 15.06.

C. Any insurance policy maintained by Owner covering any loss, damage or consequential loss referred to in Paragraph 6.06.B shall contain provisions to the effect that in the event of payment of any such loss, damage, or consequential loss, the insurers will have no rights of recovery against Contractor, Subcontractors, or Engineer, or the officers, directors, members, partners, employees, agents, consultants, or subcontractors of each and any of them.

D. Contractor shall be responsible for assuring that the agreement under which a Subcontractor performs a portion of the Work contains provisions whereby the Subcontractor waives all rights against Owner, Contractor, all individuals or entities identified in the Supplementary Conditions as insureds, the Engineer and its consultants, and the officers, directors, members, partners, employees, agents, consultants, and subcontractors of each and any of them, for all losses and damages caused by, arising out of, relating to, or resulting from any of the perils or causes of loss covered by builder's risk insurance and any other property insurance applicable to the Work.

6.07 *Receipt and Application of Property Insurance Proceeds*

A. Any insured loss under the builder's risk and other policies of insurance required by Paragraph 6.05 will be adjusted and settled with the named insured that purchased the

Copyright © 2013 National Society of Professional Engineers, American Council of Engineering Companies, and American Society of Civil Engineers. All rights reserved.

policy. Such named insured shall act as fiduciary for the other insureds, and give notice to such other insureds that adjustment and settlement of a claim is in progress. Any other insured may state its position regarding a claim for insured loss in writing within 15 days after notice of such claim.

B. Proceeds for such insured losses may be made payable by the insurer either jointly to multiple insureds, or to the named insured that purchased the policy in its own right and as fiduciary for other insureds, subject to the requirements of any applicable mortgage clause. A named insured receiving insurance proceeds under the builder's risk and other policies of insurance required by Paragraph 6.05 shall distribute such proceeds in accordance with such agreement as the parties in interest may reach, or as otherwise required under the dispute resolution provisions of this Contract or applicable Laws and Regulations.

C. If no other special agreement is reached, the damaged Work shall be repaired or replaced, the money so received applied on account thereof, and the Work and the cost thereof covered by Change Order, if needed.

ARTICLE 7 – CONTRACTOR'S RESPONSIBILITIES

7.01 *Supervision and Superintendence*

A. Contractor shall supervise, inspect, and direct the Work competently and efficiently, devoting such attention thereto and applying such skills and expertise as may be necessary to perform the Work in accordance with the Contract Documents. Contractor shall be solely responsible for the means, methods, techniques, sequences, and procedures of construction.

B. At all times during the progress of the Work, Contractor shall assign a competent resident superintendent who shall not be replaced without written notice to Owner and Engineer except under extraordinary circumstances.

7.02 *Labor; Working Hours*

A. Contractor shall provide competent, suitably qualified personnel to survey and lay out the Work and perform construction as required by the Contract Documents. Contractor shall at all times maintain good discipline and order at the Site.

B. Except as otherwise required for the safety or protection of persons or the Work or property at the Site or adjacent thereto, and except as otherwise stated in the Contract Documents, all Work at the Site shall be performed during regular working hours, Monday through Friday. Contractor will not perform Work on a Saturday, Sunday, or any legal holiday. Contractor may perform Work outside regular working hours or on Saturdays, Sundays, or legal holidays only with Owner's written consent, which will not be unreasonably withheld.

7.03 *Services, Materials, and Equipment*

A. Unless otherwise specified in the Contract Documents, Contractor shall provide and assume full responsibility for all services, materials, equipment, labor, transportation, construction equipment and machinery, tools, appliances, fuel, power, light, heat, telephone, water, sanitary facilities, temporary facilities, and all other facilities and incidentals necessary for the performance, testing, start up, and completion of the Work, whether or not such items are specifically called for in the Contract Documents.

B. All materials and equipment incorporated into the Work shall be of good quality and new, except as otherwise provided in the Contract Documents. All special warranties and

Copyright © 2013 National Society of Professional Engineers, American Council of Engineering Companies, and American Society of Civil Engineers. All rights reserved.

guarantees required by the Specifications shall expressly run to the benefit of Owner. If required by Engineer, Contractor shall furnish satisfactory evidence (including reports of required tests) as to the source, kind, and quality of materials and equipment.

C. All materials and equipment shall be stored, applied, installed, connected, erected, protected, used, cleaned, and conditioned in accordance with instructions of the applicable Supplier, except as otherwise may be provided in the Contract Documents.

7.04 *"Or Equals"*

A. Whenever an item of material or equipment is specified or described in the Contract Documents by using the name of a proprietary item or the name of a particular Supplier, the Contract Price has been based upon Contractor furnishing such item as specified. The specification or description of such an item is intended to establish the type, function, appearance, and quality required. Unless the specification or description contains or is followed by words reading that no like, equivalent, or "or equal" item is permitted, Contractor may request that Engineer authorize the use of other items of material or equipment, or items from other proposed suppliers under the circumstances described below.

1. If Engineer in its sole discretion determines that an item of material or equipment proposed by Contractor is functionally equal to that named and sufficiently similar so that no change in related Work will be required, Engineer shall deem it an "or equal" item. For the purposes of this paragraph, a proposed item of material or equipment will be considered functionally equal to an item so named if:

a. in the exercise of reasonable judgment Engineer determines that:

1) it is at least equal in materials of construction, quality, durability, appearance, strength, and design characteristics;

2) it will reliably perform at least equally well the function and achieve the results imposed by the design concept of the completed Project as a functioning whole;

3) it has a proven record of performance and availability of responsive service; and

4) it is not objectionable to Owner.

b. Contractor certifies that, if approved and incorporated into the Work:

1) there will be no increase in cost to the Owner or increase in Contract Times; and

2) it will conform substantially to the detailed requirements of the item named in the Contract Documents.

B. *Contractor's Expense*: Contractor shall provide all data in support of any proposed "or equal" item at Contractor's expense.

C. *Engineer's Evaluation and Determination*: Engineer will be allowed a reasonable time to evaluate each "or-equal" request. Engineer may require Contractor to furnish additional data about the proposed "or-equal" item. Engineer will be the sole judge of acceptability. No "or-equal" item will be ordered, furnished, installed, or utilized until Engineer's review is complete and Engineer determines that the proposed item is an "or-equal", which will be evidenced by an approved Shop Drawing or other written communication. Engineer will advise Contractor in writing of any negative determination.

Copyright © 2013 National Society of Professional Engineers, American Council of Engineering Companies, and American Society of Civil Engineers. All rights reserved.

D. *Effect of Engineer's Determination*: Neither approval nor denial of an "or-equal" request shall result in any change in Contract Price. The Engineer's denial of an "or-equal" request shall be final and binding, and may not be reversed through an appeal under any provision of the Contract Documents.

E. *Treatment as a Substitution Request*: If Engineer determines that an item of material or equipment proposed by Contractor does not qualify as an "or-equal" item, Contractor may request that Engineer considered the proposed item as a substitute pursuant to Paragraph 7.05.

7.05 *Substitutes*

A. Unless the specification or description of an item of material or equipment required to be furnished under the Contract Documents contains or is followed by words reading that no substitution is permitted, Contractor may request that Engineer authorize the use of other items of material or equipment under the circumstances described below. To the extent possible such requests shall be made before commencement of related construction at the Site.

1. Contractor shall submit sufficient information as provided below to allow Engineer to determine if the item of material or equipment proposed is functionally equivalent to that named and an acceptable substitute therefor. Engineer will not accept requests for review of proposed substitute items of material or equipment from anyone other than Contractor.

2. The requirements for review by Engineer will be as set forth in Paragraph 7.05.B, as supplemented by the Specifications, and as Engineer may decide is appropriate under the circumstances.

3. Contractor shall make written application to Engineer for review of a proposed substitute item of material or equipment that Contractor seeks to furnish or use. The application:

a. shall certify that the proposed substitute item will:

1) perform adequately the functions and achieve the results called for by the general design,

2) be similar in substance to that specified, and

3) be suited to the same use as that specified.

b. will state:

1) the extent, if any, to which the use of the proposed substitute item will necessitate a change in Contract Times,

2) whether use of the proposed substitute item in the Work will require a change in any of the Contract Documents (or in the provisions of any other direct contract with Owner for other work on the Project) to adapt the design to the proposed substitute item, and

3) whether incorporation or use of the proposed substitute item in connection with the Work is subject to payment of any license fee or royalty.

c. will identify:

1) all variations of the proposed substitute item from that specified, and

Copyright © 2013 National Society of Professional Engineers, American Council of Engineering Companies, and American Society of Civil Engineers. All rights reserved.

2) available engineering, sales, maintenance, repair, and replacement services.

d. shall contain an itemized estimate of all costs or credits that will result directly or indirectly from use of such substitute item, including but not limited to changes in Contract Price, shared savings, costs of redesign, and claims of other contractors affected by any resulting change.

B. *Engineer's Evaluation and Determination*: Engineer will be allowed a reasonable time to evaluate each substitute request, and to obtain comments and direction from Owner. Engineer may require Contractor to furnish additional data about the proposed substitute item. Engineer will be the sole judge of acceptability. No substitute will be ordered, furnished, installed, or utilized until Engineer's review is complete and Engineer determines that the proposed item is an acceptable substitute. Engineer's determination will be evidenced by a Field Order or a proposed Change Order accounting for the substitution itself and all related impacts, including changes in Contract Price or Contract Times. Engineer will advise Contractor in writing of any negative determination.

C. *Special Guarantee*: Owner may require Contractor to furnish at Contractor's expense a special performance guarantee or other surety with respect to any substitute.

D. *Reimbursement of Engineer's Cost*: Engineer will record Engineer's costs in evaluating a substitute proposed or submitted by Contractor. Whether or not Engineer approves a substitute so proposed or submitted by Contractor, Contractor shall reimburse Owner for the reasonable charges of Engineer for evaluating each such proposed substitute. Contractor shall also reimburse Owner for the reasonable charges of Engineer for making changes in the Contract Documents (or in the provisions of any other direct contract with Owner) resulting from the acceptance of each proposed substitute.

E. *Contractor's Expense*: Contractor shall provide all data in support of any proposed substitute at Contractor's expense.

F. *Effect of Engineer's Determination*: If Engineer approves the substitution request, Contractor shall execute the proposed Change Order and proceed with the substitution. The Engineer's denial of a substitution request shall be final and binding, and may not be reversed through an appeal under any provision of the Contract Documents. Contractor may challenge the scope of reimbursement costs imposed under Paragraph 7.05.D, by timely submittal of a Change Proposal.

7.06 *Concerning Subcontractors, Suppliers, and Others*

A. Contractor may retain Subcontractors and Suppliers for the performance of parts of the Work. Such Subcontractors and Suppliers must be acceptable to Owner.

B. Contractor shall retain specific Subcontractors, Suppliers, or other individuals or entities for the performance of designated parts of the Work if required by the Contract to do so.

C. Subsequent to the submittal of Contractor's Bid or final negotiation of the terms of the Contract, Owner may not require Contractor to retain any Subcontractor, Supplier, or other individual or entity to furnish or perform any of the Work against which Contractor has reasonable objection.

D. Prior to entry into any binding subcontract or purchase order, Contractor shall submit to Owner the identity of the proposed Subcontractor or Supplier (unless Owner has already deemed such proposed Subcontractor or Supplier acceptable, during the bidding process or otherwise). Such proposed Subcontractor or Supplier shall be deemed acceptable to Owner unless Owner raises a substantive, reasonable objection within five days.

Copyright © 2013 National Society of Professional Engineers, American Council of Engineering Companies, and American Society of Civil Engineers. All rights reserved.

E. Owner may require the replacement of any Subcontractor, Supplier, or other individual or entity retained by Contractor to perform any part of the Work. Owner also may require Contractor to retain specific replacements; provided, however, that Owner may not require a replacement to which Contractor has a reasonable objection. If Contractor has submitted the identity of certain Subcontractors, Suppliers, or other individuals or entities for acceptance by Owner, and Owner has accepted it (either in writing or by failing to make written objection thereto), then Owner may subsequently revoke the acceptance of any such Subcontractor, Supplier, or other individual or entity so identified solely on the basis of substantive, reasonable objection after due investigation. Contractor shall submit an acceptable replacement for the rejected Subcontractor, Supplier, or other individual or entity.

F. If Owner requires the replacement of any Subcontractor, Supplier, or other individual or entity retained by Contractor to perform any part of the Work, then Contractor shall be entitled to an adjustment in Contract Price or Contract Times, or both, with respect to the replacement; and Contractor shall initiate a Change Proposal for such adjustment within 30 days of Owner's requirement of replacement.

G. No acceptance by Owner of any such Subcontractor, Supplier, or other individual or entity, whether initially or as a replacement, shall constitute a waiver of the right of Owner to the completion of the Work in accordance with the Contract Documents.

H. On a monthly basis Contractor shall submit to Engineer a complete list of all Subcontractors and Suppliers having a direct contract with Contractor, and of all other Subcontractors and Suppliers known to Contractor at the time of submittal.

I. Contractor shall be fully responsible to Owner and Engineer for all acts and omissions of the Subcontractors, Suppliers, and other individuals or entities performing or furnishing any of the Work just as Contractor is responsible for Contractor's own acts and omissions.

J. Contractor shall be solely responsible for scheduling and coordinating the work of Subcontractors, Suppliers, and all other individuals or entities performing or furnishing any of the Work.

K. Contractor shall restrict all Subcontractors, Suppliers, and such other individuals or entities performing or furnishing any of the Work from communicating with Engineer or Owner, except through Contractor or in case of an emergency, or as otherwise expressly allowed herein.

L. The divisions and sections of the Specifications and the identifications of any Drawings shall not control Contractor in dividing the Work among Subcontractors or Suppliers or delineating the Work to be performed by any specific trade.

M. All Work performed for Contractor by a Subcontractor or Supplier shall be pursuant to an appropriate contractual agreement that specifically binds the Subcontractor or Supplier to the applicable terms and conditions of the Contract Documents for the benefit of Owner and Engineer.

N. Owner may furnish to any Subcontractor or Supplier, to the extent practicable, information about amounts paid to Contractor on account of Work performed for Contractor by the particular Subcontractor or Supplier.

Copyright © 2013 National Society of Professional Engineers, American Council of Engineering Companies, and American Society of Civil Engineers. All rights reserved.

O. Nothing in the Contract Documents:

1. shall create for the benefit of any such Subcontractor, Supplier, or other individual or entity any contractual relationship between Owner or Engineer and any such Subcontractor, Supplier, or other individual or entity; nor

2. shall create any obligation on the part of Owner or Engineer to pay or to see to the payment of any money due any such Subcontractor, Supplier, or other individual or entity except as may otherwise be required by Laws and Regulations.

7.07 *Patent Fees and Royalties*

A. Contractor shall pay all license fees and royalties and assume all costs incident to the use in the performance of the Work or the incorporation in the Work of any invention, design, process, product, or device which is the subject of patent rights or copyrights held by others. If a particular invention, design, process, product, or device is specified in the Contract Documents for use in the performance of the Work and if, to the actual knowledge of Owner or Engineer, its use is subject to patent rights or copyrights calling for the payment of any license fee or royalty to others, the existence of such rights shall be disclosed by Owner in the Contract Documents.

B. To the fullest extent permitted by Laws and Regulations, Owner shall indemnify and hold harmless Contractor, and its officers, directors, members, partners, employees, agents, consultants, and subcontractors from and against all claims, costs, losses, and damages (including but not limited to all fees and charges of engineers, architects, attorneys, and other professionals, and all court or arbitration or other dispute resolution costs) arising out of or relating to any infringement of patent rights or copyrights incident to the use in the performance of the Work or resulting from the incorporation in the Work of any invention, design, process, product, or device specified in the Contract Documents, but not identified as being subject to payment of any license fee or royalty to others required by patent rights or copyrights.

C. To the fullest extent permitted by Laws and Regulations, Contractor shall indemnify and hold harmless Owner and Engineer, and the officers, directors, members, partners, employees, agents, consultants and subcontractors of each and any of them from and against all claims, costs, losses, and damages (including but not limited to all fees and charges of engineers, architects, attorneys, and other professionals and all court or arbitration or other dispute resolution costs) arising out of or relating to any infringement of patent rights or copyrights incident to the use in the performance of the Work or resulting from the incorporation in the Work of any invention, design, process, product, or device not specified in the Contract Documents.

7.08 *Permits*

A. Unless otherwise provided in the Contract Documents, Contractor shall obtain and pay for all construction permits and licenses. Owner shall assist Contractor, when necessary, in obtaining such permits and licenses. Contractor shall pay all governmental charges and inspection fees necessary for the prosecution of the Work which are applicable at the time of the submission of Contractor's Bid (or when Contractor became bound under a negotiated contract). Owner shall pay all charges of utility owners for connections for providing permanent service to the Work

Copyright © 2013 National Society of Professional Engineers, American Council of Engineering Companies, and American Society of Civil Engineers. All rights reserved.

7.09 *Taxes*

A. Contractor shall pay all sales, consumer, use, and other similar taxes required to be paid by Contractor in accordance with the Laws and Regulations of the place of the Project which are applicable during the performance of the Work.

7.10 *Laws and Regulations*

A. Contractor shall give all notices required by and shall comply with all Laws and Regulations applicable to the performance of the Work. Except where otherwise expressly required by applicable Laws and Regulations, neither Owner nor Engineer shall be responsible for monitoring Contractor's compliance with any Laws or Regulations.

B. If Contractor performs any Work or takes any other action knowing or having reason to know that it is contrary to Laws or Regulations, Contractor shall bear all resulting costs and losses, and shall indemnify and hold harmless Owner and Engineer, and the officers, directors, members, partners, employees, agents, consultants, and subcontractors of each and any of them from and against all claims, costs, losses, and damages (including but not limited to all fees and charges of engineers, architects, attorneys, and other professionals and all court or arbitration or other dispute resolution costs) arising out of or relating to such Work or other action. It shall not be Contractor's responsibility to make certain that the Work described in the Contract Documents is in accordance with Laws and Regulations, but this shall not relieve Contractor of Contractor's obligations under Paragraph 3.03.

C. Owner or Contractor may give notice to the other party of any changes after the submission of Contractor's Bid (or after the date when Contractor became bound under a negotiated contract) in Laws or Regulations having an effect on the cost or time of performance of the Work, including but not limited to changes in Laws or Regulations having an effect on procuring permits and on sales, use, value-added, consumption, and other similar taxes. If Owner and Contractor are unable to agree on entitlement to or on the amount or extent, if any, of any adjustment in Contract Price or Contract Times resulting from such changes, then within 30 days of such notice Contractor may submit a Change Proposal, or Owner may initiate a Claim.

7.11 *Record Documents*

A. Contractor shall maintain in a safe place at the Site one printed record copy of all Drawings, Specifications, Addenda, Change Orders, Work Change Directives, Field Orders, written interpretations and clarifications, and approved Shop Drawings. Contractor shall keep such record documents in good order and annotate them to show changes made during construction. These record documents, together with all approved Samples, will be available to Engineer for reference. Upon completion of the Work, Contractor shall deliver these record documents to Engineer.

7.12 *Safety and Protection*

A. Contractor shall be solely responsible for initiating, maintaining, and supervising all safety precautions and programs in connection with the Work. Such responsibility does not relieve Subcontractors of their responsibility for the safety of persons or property in the performance of their work, nor for compliance with applicable safety Laws and Regulations. Contractor shall take all necessary precautions for the safety of, and shall provide the necessary protection to prevent damage, injury, or loss to:

1. all persons on the Site or who may be affected by the Work;

Copyright © 2013 National Society of Professional Engineers, American Council of Engineering Companies, and American Society of Civil Engineers. All rights reserved.

2. all the Work and materials and equipment to be incorporated therein, whether in storage on or off the Site; and

3. other property at the Site or adjacent thereto, including trees, shrubs, lawns, walks, pavements, roadways, structures, other work in progress, utilities, and Underground Facilities not designated for removal, relocation, or replacement in the course of construction.

B. Contractor shall comply with all applicable Laws and Regulations relating to the safety of persons or property, or to the protection of persons or property from damage, injury, or loss; and shall erect and maintain all necessary safeguards for such safety and protection. Contractor shall notify Owner; the owners of adjacent property, Underground Facilities, and other utilities; and other contractors and utility owners performing work at or adjacent to the Site, when prosecution of the Work may affect them, and shall cooperate with them in the protection, removal, relocation, and replacement of their property or work in progress.

C. Contractor shall comply with the applicable requirements of Owner's safety programs, if any. The Supplementary Conditions identify any Owner's safety programs that are applicable to the Work.

D. Contractor shall inform Owner and Engineer of the specific requirements of Contractor's safety program with which Owner's and Engineer's employees and representatives must comply while at the Site.

E. All damage, injury, or loss to any property referred to in Paragraph 7.12.A.2 or 7.12.A.3 caused, directly or indirectly, in whole or in part, by Contractor, any Subcontractor, Supplier, or any other individual or entity directly or indirectly employed by any of them to perform any of the Work, or anyone for whose acts any of them may be liable, shall be remedied by Contractor at its expense (except damage or loss attributable to the fault of Drawings or Specifications or to the acts or omissions of Owner or Engineer or anyone employed by any of them, or anyone for whose acts any of them may be liable, and not attributable, directly or indirectly, in whole or in part, to the fault or negligence of Contractor or any Subcontractor, Supplier, or other individual or entity directly or indirectly employed by any of them).

F. Contractor's duties and responsibilities for safety and protection shall continue until such time as all the Work is completed and Engineer has issued a notice to Owner and Contractor in accordance with Paragraph 15.06.B that the Work is acceptable (except as otherwise expressly provided in connection with Substantial Completion).

G. Contractor's duties and responsibilities for safety and protection shall resume whenever Contractor or any Subcontractor or Supplier returns to the Site to fulfill warranty or correction obligations, or to conduct other tasks arising from the Contract Documents.

7.13 *Safety Representative*

A. Contractor shall designate a qualified and experienced safety representative at the Site whose duties and responsibilities shall be the prevention of accidents and the maintaining and supervising of safety precautions and programs.

7.14 *Hazard Communication Programs*

A. Contractor shall be responsible for coordinating any exchange of material safety data sheets or other hazard communication information required to be made available to or

Copyright © 2013 National Society of Professional Engineers, American Council of Engineering Companies, and American Society of Civil Engineers. All rights reserved.

exchanged between or among employers at the Site in accordance with Laws or Regulations.

7.15 *Emergencies*

A. In emergencies affecting the safety or protection of persons or the Work or property at the Site or adjacent thereto, Contractor is obligated to act to prevent threatened damage, injury, or loss. Contractor shall give Engineer prompt written notice if Contractor believes that any significant changes in the Work or variations from the Contract Documents have been caused thereby or are required as a result thereof. If Engineer determines that a change in the Contract Documents is required because of the action taken by Contractor in response to such an emergency, a Work Change Directive or Change Order will be issued.

7.16 *Shop Drawings, Samples, and Other Submittals*

A. *Shop Drawing and Sample Submittal Requirements*:

1. Before submitting a Shop Drawing or Sample, Contractor shall have:

a. reviewed and coordinated the Shop Drawing or Sample with other Shop Drawings and Samples and with the requirements of the Work and the Contract Documents;

b. determined and verified all field measurements, quantities, dimensions, specified performance and design criteria, installation requirements, materials, catalog numbers, and similar information with respect thereto;

c. determined and verified the suitability of all materials and equipment offered with respect to the indicated application, fabrication, shipping, handling, storage, assembly, and installation pertaining to the performance of the Work; and

d. determined and verified all information relative to Contractor's responsibilities for means, methods, techniques, sequences, and procedures of construction, and safety precautions and programs incident thereto.

2. Each submittal shall bear a stamp or specific written certification that Contractor has satisfied Contractor's obligations under the Contract Documents with respect to Contractor's review of that submittal, and that Contractor approves the submittal.

3. With each submittal, Contractor shall give Engineer specific written notice of any variations that the Shop Drawing or Sample may have from the requirements of the Contract Documents. This notice shall be set forth in a written communication separate from the Shop Drawings or Sample submittal; and, in addition, in the case of Shop Drawings by a specific notation made on each Shop Drawing submitted to Engineer for review and approval of each such variation.

B. *Submittal Procedures for Shop Drawings and Samples*: Contractor shall submit Shop Drawings and Samples to Engineer for review and approval in accordance with the accepted Schedule of Submittals. Each submittal will be identified as Engineer may require.

1. *Shop Drawings*:

a. Contractor shall submit the number of copies required in the Specifications.

b. Data shown on the Shop Drawings will be complete with respect to quantities, dimensions, specified performance and design criteria, materials, and similar data to show Engineer the services, materials, and equipment Contractor proposes to

Copyright © 2013 National Society of Professional Engineers, American Council of Engineering Companies, and American Society of Civil Engineers. All rights reserved.

provide and to enable Engineer to review the information for the limited purposes required by Paragraph 7.16.D.

2. *Samples*:

   a. Contractor shall submit the number of Samples required in the Specifications.

   b. Contractor shall clearly identify each Sample as to material, Supplier, pertinent data such as catalog numbers, the use for which intended and other data as Engineer may require to enable Engineer to review the submittal for the limited purposes required by Paragraph 7.16.D.

3. Where a Shop Drawing or Sample is required by the Contract Documents or the Schedule of Submittals, any related Work performed prior to Engineer's review and approval of the pertinent submittal will be at the sole expense and responsibility of Contractor.

C. *Other Submittals*: Contractor shall submit other submittals to Engineer in accordance with the accepted Schedule of Submittals, and pursuant to the applicable terms of the Specifications.

D. *Engineer's Review*:

1. Engineer will provide timely review of Shop Drawings and Samples in accordance with the Schedule of Submittals acceptable to Engineer. Engineer's review and approval will be only to determine if the items covered by the submittals will, after installation or incorporation in the Work, conform to the information given in the Contract Documents and be compatible with the design concept of the completed Project as a functioning whole as indicated by the Contract Documents.

2. Engineer's review and approval will not extend to means, methods, techniques, sequences, or procedures of construction or to safety precautions or programs incident thereto.

3. Engineer's review and approval of a separate item as such will not indicate approval of the assembly in which the item functions.

4. Engineer's review and approval of a Shop Drawing or Sample shall not relieve Contractor from responsibility for any variation from the requirements of the Contract Documents unless Contractor has complied with the requirements of Paragraph 7.16.A.3 and Engineer has given written approval of each such variation by specific written notation thereof incorporated in or accompanying the Shop Drawing or Sample. Engineer will document any such approved variation from the requirements of the Contract Documents in a Field Order.

5. Engineer's review and approval of a Shop Drawing or Sample shall not relieve Contractor from responsibility for complying with the requirements of Paragraph 7.16.A and B.

6. Engineer's review and approval of a Shop Drawing or Sample, or of a variation from the requirements of the Contract Documents, shall not, under any circumstances, change the Contract Times or Contract Price, unless such changes are included in a Change Order.

7. Neither Engineer's receipt, review, acceptance or approval of a Shop Drawing, Sample, or other submittal shall result in such item becoming a Contract Document.

Copyright © 2013 National Society of Professional Engineers, American Council of Engineering Companies, and American Society of Civil Engineers. All rights reserved.

8. Contractor shall perform the Work in compliance with the requirements and commitments set forth in approved Shop Drawings and Samples, subject to the provisions of Paragraph 7.16.D.4.

E. *Resubmittal Procedures*:

1. Contractor shall make corrections required by Engineer and shall return the required number of corrected copies of Shop Drawings and submit, as required, new Samples for review and approval. Contractor shall direct specific attention in writing to revisions other than the corrections called for by Engineer on previous submittals.

2. Contractor shall furnish required submittals with sufficient information and accuracy to obtain required approval of an item with no more than three submittals. Engineer will record Engineer's time for reviewing a fourth or subsequent submittal of a Shop Drawings, sample, or other item requiring approval, and Contractor shall be responsible for Engineer's charges to Owner for such time. Owner may impose a set-off against payments due to Contractor to secure reimbursement for such charges.

3. If Contractor requests a change of a previously approved submittal item, Contractor shall be responsible for Engineer's charges to Owner for its review time, and Owner may impose a set-off against payments due to Contractor to secure reimbursement for such charges, unless the need for such change is beyond the control of Contractor.

7.17 *Contractor's General Warranty and Guarantee*

A. Contractor warrants and guarantees to Owner that all Work will be in accordance with the Contract Documents and will not be defective. Engineer and its officers, directors, members, partners, employees, agents, consultants, and subcontractors shall be entitled to rely on Contractor's warranty and guarantee.

B. Contractor's warranty and guarantee hereunder excludes defects or damage caused by:

1. abuse, modification, or improper maintenance or operation by persons other than Contractor, Subcontractors, Suppliers, or any other individual or entity for whom Contractor is responsible; or

2. normal wear and tear under normal usage.

C. Contractor's obligation to perform and complete the Work in accordance with the Contract Documents shall be absolute. None of the following will constitute an acceptance of Work that is not in accordance with the Contract Documents or a release of Contractor's obligation to perform the Work in accordance with the Contract Documents:

1. observations by Engineer;

2. recommendation by Engineer or payment by Owner of any progress or final payment;

3. the issuance of a certificate of Substantial Completion by Engineer or any payment related thereto by Owner;

4. use or occupancy of the Work or any part thereof by Owner;

5. any review and approval of a Shop Drawing or Sample submittal;

6. the issuance of a notice of acceptability by Engineer;

7. any inspection, test, or approval by others; or

8. any correction of defective Work by Owner.

Copyright © 2013 National Society of Professional Engineers, American Council of Engineering Companies, and American Society of Civil Engineers. All rights reserved.

D. If the Contract requires the Contractor to accept the assignment of a contract entered into by Owner, then the specific warranties, guarantees, and correction obligations contained in the assigned contract shall govern with respect to Contractor's performance obligations to Owner for the Work described in the assigned contract.

7.18 *Indemnification*

A. To the fullest extent permitted by Laws and Regulations, and in addition to any other obligations of Contractor under the Contract or otherwise, Contractor shall indemnify and hold harmless Owner and Engineer, and the officers, directors, members, partners, employees, agents, consultants and subcontractors of each and any of them from and against all claims, costs, losses, and damages (including but not limited to all fees and charges of engineers, architects, attorneys, and other professionals and all court or arbitration or other dispute resolution costs) arising out of or relating to the performance of the Work, provided that any such claim, cost, loss, or damage is attributable to bodily injury, sickness, disease, or death, or to injury to or destruction of tangible property (other than the Work itself), including the loss of use resulting therefrom but only to the extent caused by any negligent act or omission of Contractor, any Subcontractor, any Supplier, or any individual or entity directly or indirectly employed by any of them to perform any of the Work or anyone for whose acts any of them may be liable.

B. In any and all claims against Owner or Engineer or any of their officers, directors, members, partners, employees, agents, consultants, or subcontractors by any employee (or the survivor or personal representative of such employee) of Contractor, any Subcontractor, any Supplier, or any individual or entity directly or indirectly employed by any of them to perform any of the Work, or anyone for whose acts any of them may be liable, the indemnification obligation under Paragraph 7.18.A shall not be limited in any way by any limitation on the amount or type of damages, compensation, or benefits payable by or for Contractor or any such Subcontractor, Supplier, or other individual or entity under workers' compensation acts, disability benefit acts, or other employee benefit acts.

C. The indemnification obligations of Contractor under Paragraph 7.18.A shall not extend to the liability of Engineer and Engineer's officers, directors, members, partners, employees, agents, consultants and subcontractors arising out of:

1. the preparation or approval of, or the failure to prepare or approve maps, Drawings, opinions, reports, surveys, Change Orders, designs, or Specifications; or

2. giving directions or instructions, or failing to give them, if that is the primary cause of the injury or damage.

7.19 *Delegation of Professional Design Services*

A. Contractor will not be required to provide professional design services unless such services are specifically required by the Contract Documents for a portion of the Work or unless such services are required to carry out Contractor's responsibilities for construction means, methods, techniques, sequences and procedures. Contractor shall not be required to provide professional services in violation of applicable Laws and Regulations.

B. If professional design services or certifications by a design professional related to systems, materials, or equipment are specifically required of Contractor by the Contract Documents, Owner and Engineer will specify all performance and design criteria that such services must satisfy. Contractor shall cause such services or certifications to be provided by a properly licensed professional, whose signature and seal shall appear on all drawings, calculations, specifications, certifications, and other submittals prepared by such professional. Shop

Copyright © 2013 National Society of Professional Engineers, American Council of Engineering Companies, and American Society of Civil Engineers. All rights reserved.

Drawings and other submittals related to the Work designed or certified by such professional, if prepared by others, shall bear such professional's written approval when submitted to Engineer.

C. Owner and Engineer shall be entitled to rely upon the adequacy, accuracy, and completeness of the services, certifications, or approvals performed by such design professionals, provided Owner and Engineer have specified to Contractor all performance and design criteria that such services must satisfy.

D. Pursuant to this paragraph, Engineer's review and approval of design calculations and design drawings will be only for the limited purpose of checking for conformance with performance and design criteria given and the design concept expressed in the Contract Documents. Engineer's review and approval of Shop Drawings and other submittals (except design calculations and design drawings) will be only for the purpose stated in Paragraph 7.16.D.1.

E. Contractor shall not be responsible for the adequacy of the performance or design criteria specified by Owner or Engineer.

ARTICLE 8 – OTHER WORK AT THE SITE

8.01 *Other Work*

A. In addition to and apart from the Work under the Contract Documents, the Owner may perform other work at or adjacent to the Site. Such other work may be performed by Owner's employees, or through contracts between the Owner and third parties. Owner may also arrange to have third-party utility owners perform work on their utilities and facilities at or adjacent to the Site.

B. If Owner performs other work at or adjacent to the Site with Owner's employees, or through contracts for such other work, then Owner shall give Contractor written notice thereof prior to starting any such other work. If Owner has advance information regarding the start of any utility work at or adjacent to the Site, Owner shall provide such information to Contractor.

C. Contractor shall afford each other contractor that performs such other work, each utility owner performing other work, and Owner, if Owner is performing other work with Owner's employees, proper and safe access to the Site, and provide a reasonable opportunity for the introduction and storage of materials and equipment and the execution of such other work. Contractor shall do all cutting, fitting, and patching of the Work that may be required to properly connect or otherwise make its several parts come together and properly integrate with such other work. Contractor shall not endanger any work of others by cutting, excavating, or otherwise altering such work; provided, however, that Contractor may cut or alter others' work with the written consent of Engineer and the others whose work will be affected.

D. If the proper execution or results of any part of Contractor's Work depends upon work performed by others under this Article 8, Contractor shall inspect such other work and promptly report to Engineer in writing any delays, defects, or deficiencies in such other work that render it unavailable or unsuitable for the proper execution and results of Contractor's Work. Contractor's failure to so report will constitute an acceptance of such other work as fit and proper for integration with Contractor's Work except for latent defects and deficiencies in such other work.

Copyright © 2013 National Society of Professional Engineers, American Council of Engineering Companies, and American Society of Civil Engineers. All rights reserved.

8.02 *Coordination*

A. If Owner intends to contract with others for the performance of other work at or adjacent to the Site, to perform other work at or adjacent to the Site with Owner's employees, or to arrange to have utility owners perform work at or adjacent to the Site, the following will be set forth in the Supplementary Conditions or provided to Contractor prior to the start of any such other work:

1. the identity of the individual or entity that will have authority and responsibility for coordination of the activities among the various contractors;

2. an itemization of the specific matters to be covered by such authority and responsibility; and

3. the extent of such authority and responsibilities.

B. Unless otherwise provided in the Supplementary Conditions, Owner shall have sole authority and responsibility for such coordination.

8.03 *Legal Relationships*

A. If, in the course of performing other work at or adjacent to the Site for Owner, the Owner's employees, any other contractor working for Owner, or any utility owner for whom the Owner is responsible causes damage to the Work or to the property of Contractor or its Subcontractors, or delays, disrupts, interferes with, or increases the scope or cost of the performance of the Work, through actions or inaction, then Contractor shall be entitled to an equitable adjustment in the Contract Price or the Contract Times, or both. Contractor must submit any Change Proposal seeking an equitable adjustment in the Contract Price or the Contract Times under this paragraph within 30 days of the damaging, delaying, disrupting, or interfering event. The entitlement to, and extent of, any such equitable adjustment shall take into account information (if any) regarding such other work that was provided to Contractor in the Contract Documents prior to the submittal of the Bid or the final negotiation of the terms of the Contract. When applicable, any such equitable adjustment in Contract Price shall be conditioned on Contractor assigning to Owner all Contractor's rights against such other contractor or utility owner with respect to the damage, delay, disruption, or interference that is the subject of the adjustment. Contractor's entitlement to an adjustment of the Contract Times is conditioned on such adjustment being essential to Contractor's ability to complete the Work within the Contract Times.

B. Contractor shall take reasonable and customary measures to avoid damaging, delaying, disrupting, or interfering with the work of Owner, any other contractor, or any utility owner performing other work at or adjacent to the Site. If Contractor fails to take such measures and as a result damages, delays, disrupts, or interferes with the work of any such other contractor or utility owner, then Owner may impose a set-off against payments due to Contractor, and assign to such other contractor or utility owner the Owner's contractual rights against Contractor with respect to the breach of the obligations set forth in this paragraph.

C. When Owner is performing other work at or adjacent to the Site with Owner's employees, Contractor shall be liable to Owner for damage to such other work, and for the reasonable direct delay, disruption, and interference costs incurred by Owner as a result of Contractor's failure to take reasonable and customary measures with respect to Owner's other work. In response to such damage, delay, disruption, or interference, Owner may impose a set-off against payments due to Contractor.

Copyright © 2013 National Society of Professional Engineers, American Council of Engineering Companies, and American Society of Civil Engineers. All rights reserved.

D. If Contractor damages, delays, disrupts, or interferes with the work of any other contractor, or any utility owner performing other work at or adjacent to the Site, through Contractor's failure to take reasonable and customary measures to avoid such impacts, or if any claim arising out of Contractor's actions, inactions, or negligence in performance of the Work at or adjacent to the Site is made by any such other contractor or utility owner against Contractor, Owner, or Engineer, then Contractor shall (1) promptly attempt to settle the claim as to all parties through negotiations with such other contractor or utility owner, or otherwise resolve the claim by arbitration or other dispute resolution proceeding or at law, and (2) indemnify and hold harmless Owner and Engineer, and the officers, directors, members, partners, employees, agents, consultants and subcontractors of each and any of them from and against any such claims, and against all costs, losses, and damages (including but not limited to all fees and charges of engineers, architects, attorneys, and other professionals and all court or arbitration or other dispute resolution costs) arising out of or relating to such damage, delay, disruption, or interference.

ARTICLE 9 – OWNER'S RESPONSIBILITIES

9.01 *Communications to Contractor*

A. Except as otherwise provided in these General Conditions, Owner shall issue all communications to Contractor through Engineer.

9.02 *Replacement of Engineer*

A. Owner may at its discretion appoint an engineer to replace Engineer, provided Contractor makes no reasonable objection to the replacement engineer. The replacement engineer's status under the Contract Documents shall be that of the former Engineer.

9.03 *Furnish Data*

A. Owner shall promptly furnish the data required of Owner under the Contract Documents.

9.04 *Pay When Due*

A. Owner shall make payments to Contractor when they are due as provided in the Agreement.

9.05 *Lands and Easements; Reports, Tests, and Drawings*

A. Owner's duties with respect to providing lands and easements are set forth in Paragraph 5.01.

B. Owner's duties with respect to providing engineering surveys to establish reference points are set forth in Paragraph 4.03.

C. Article 5 refers to Owner's identifying and making available to Contractor copies of reports of explorations and tests of conditions at the Site, and drawings of physical conditions relating to existing surface or subsurface structures at the Site.

9.06 *Insurance*

A. Owner's responsibilities, if any, with respect to purchasing and maintaining liability and property insurance are set forth in Article 6.

9.07 *Change Orders*

A. Owner's responsibilities with respect to Change Orders are set forth in Article 11.

Copyright © 2013 National Society of Professional Engineers, American Council of Engineering Companies, and American Society of Civil Engineers. All rights reserved.

9.08 *Inspections, Tests, and Approvals*

A. Owner's responsibility with respect to certain inspections, tests, and approvals is set forth in Paragraph 14.02.B.

9.09 *Limitations on Owner's Responsibilities*

A. The Owner shall not supervise, direct, or have control or authority over, nor be responsible for, Contractor's means, methods, techniques, sequences, or procedures of construction, or the safety precautions and programs incident thereto, or for any failure of Contractor to comply with Laws and Regulations applicable to the performance of the Work. Owner will not be responsible for Contractor's failure to perform the Work in accordance with the Contract Documents.

9.10 *Undisclosed Hazardous Environmental Condition*

A. Owner's responsibility in respect to an undisclosed Hazardous Environmental Condition is set forth in Paragraph 5.06.

9.11 *Evidence of Financial Arrangements*

A. Upon request of Contractor, Owner shall furnish Contractor reasonable evidence that financial arrangements have been made to satisfy Owner's obligations under the Contract Documents (including obligations under proposed changes in the Work).

9.12 *Safety Programs*

A. While at the Site, Owner's employees and representatives shall comply with the specific applicable requirements of Contractor's safety programs of which Owner has been informed.

B. Owner shall furnish copies of any applicable Owner safety programs to Contractor.

ARTICLE 10 – ENGINEER'S STATUS DURING CONSTRUCTION

10.01 *Owner's Representative*

A. Engineer will be Owner's representative during the construction period. The duties and responsibilities and the limitations of authority of Engineer as Owner's representative during construction are set forth in the Contract.

10.02 *Visits to Site*

A. Engineer will make visits to the Site at intervals appropriate to the various stages of construction as Engineer deems necessary in order to observe as an experienced and qualified design professional the progress that has been made and the quality of the various aspects of Contractor's executed Work. Based on information obtained during such visits and observations, Engineer, for the benefit of Owner, will determine, in general, if the Work is proceeding in accordance with the Contract Documents. Engineer will not be required to make exhaustive or continuous inspections on the Site to check the quality or quantity of the Work. Engineer's efforts will be directed toward providing for Owner a greater degree of confidence that the completed Work will conform generally to the Contract Documents. On the basis of such visits and observations, Engineer will keep Owner informed of the progress of the Work and will endeavor to guard Owner against defective Work.

B. Engineer's visits and observations are subject to all the limitations on Engineer's authority and responsibility set forth in Paragraph 10.08. Particularly, but without limitation, during

Copyright © 2013 National Society of Professional Engineers, American Council of Engineering Companies, and American Society of Civil Engineers. All rights reserved.

or as a result of Engineer's visits or observations of Contractor's Work, Engineer will not supervise, direct, control, or have authority over or be responsible for Contractor's means, methods, techniques, sequences, or procedures of construction, or the safety precautions and programs incident thereto, or for any failure of Contractor to comply with Laws and Regulations applicable to the performance of the Work.

10.03 *Project Representative*

A. If Owner and Engineer have agreed that Engineer will furnish a Resident Project Representative to represent Engineer at the Site and assist Engineer in observing the progress and quality of the Work, then the authority and responsibilities of any such Resident Project Representative will be as provided in the Supplementary Conditions, and limitations on the responsibilities thereof will be as provided in Paragraph 10.08. If Owner designates another representative or agent to represent Owner at the Site who is not Engineer's consultant, agent, or employee, the responsibilities and authority and limitations thereon of such other individual or entity will be as provided in the Supplementary Conditions.

10.04 *Rejecting Defective Work*

A. Engineer has the authority to reject Work in accordance with Article 14.

10.05 *Shop Drawings, Change Orders and Payments*

A. Engineer's authority, and limitations thereof, as to Shop Drawings and Samples, are set forth in Paragraph 7.16.

B. Engineer's authority, and limitations thereof, as to design calculations and design drawings submitted in response to a delegation of professional design services, if any, are set forth in Paragraph 7.19.

C. Engineer's authority as to Change Orders is set forth in Article 11.

D. Engineer's authority as to Applications for Payment is set forth in Article 15.

10.06 *Determinations for Unit Price Work*

A. Engineer will determine the actual quantities and classifications of Unit Price Work performed by Contractor as set forth in Paragraph 13.03.

10.07 *Decisions on Requirements of Contract Documents and Acceptability of Work*

A. Engineer will render decisions regarding the requirements of the Contract Documents, and judge the acceptability of the Work, pursuant to the specific procedures set forth herein for initial interpretations, Change Proposals, and acceptance of the Work. In rendering such decisions and judgments, Engineer will not show partiality to Owner or Contractor, and will not be liable to Owner, Contractor, or others in connection with any proceedings, interpretations, decisions, or judgments conducted or rendered in good faith.

10.08 *Limitations on Engineer's Authority and Responsibilities*

A. Neither Engineer's authority or responsibility under this Article 10 or under any other provision of the Contract, nor any decision made by Engineer in good faith either to exercise or not exercise such authority or responsibility or the undertaking, exercise, or performance of any authority or responsibility by Engineer, shall create, impose, or give rise to any duty in contract, tort, or otherwise owed by Engineer to Contractor, any Subcontractor, any Supplier, any other individual or entity, or to any surety for or employee or agent of any of them.

Copyright © 2013 National Society of Professional Engineers, American Council of Engineering Companies, and American Society of Civil Engineers. All rights reserved.

B. Engineer will not supervise, direct, control, or have authority over or be responsible for Contractor's means, methods, techniques, sequences, or procedures of construction, or the safety precautions and programs incident thereto, or for any failure of Contractor to comply with Laws and Regulations applicable to the performance of the Work. Engineer will not be responsible for Contractor's failure to perform the Work in accordance with the Contract Documents.

C. Engineer will not be responsible for the acts or omissions of Contractor or of any Subcontractor, any Supplier, or of any other individual or entity performing any of the Work.

D. Engineer's review of the final Application for Payment and accompanying documentation and all maintenance and operating instructions, schedules, guarantees, bonds, certificates of inspection, tests and approvals, and other documentation required to be delivered by Paragraph 15.06.A will only be to determine generally that their content complies with the requirements of, and in the case of certificates of inspections, tests, and approvals, that the results certified indicate compliance with the Contract Documents.

E. The limitations upon authority and responsibility set forth in this Paragraph 10.08 shall also apply to the Resident Project Representative, if any.

10.09 *Compliance with Safety Program*

A. While at the Site, Engineer's employees and representatives will comply with the specific applicable requirements of Owner's and Contractor's safety programs (if any) of which Engineer has been informed.

ARTICLE 11 – AMENDING THE CONTRACT DOCUMENTS; CHANGES IN THE WORK

11.01 *Amending and Supplementing Contract Documents*

A. The Contract Documents may be amended or supplemented by a Change Order, a Work Change Directive, or a Field Order.

1. *Change Orders*:

a. If an amendment or supplement to the Contract Documents includes a change in the Contract Price or the Contract Times, such amendment or supplement must be set forth in a Change Order. A Change Order also may be used to establish amendments and supplements of the Contract Documents that do not affect the Contract Price or Contract Times.

b. Owner and Contractor may amend those terms and conditions of the Contract Documents that do not involve (1) the performance or acceptability of the Work, (2) the design (as set forth in the Drawings, Specifications, or otherwise), or (3) other engineering or technical matters, without the recommendation of the Engineer. Such an amendment shall be set forth in a Change Order.

2. *Work Change Directives*: A Work Change Directive will not change the Contract Price or the Contract Times but is evidence that the parties expect that the modification ordered or documented by a Work Change Directive will be incorporated in a subsequently issued Change Order, following negotiations by the parties as to the Work Change Directive's effect, if any, on the Contract Price and Contract Times; or, if negotiations are unsuccessful, by a determination under the terms of the Contract Documents governing adjustments, expressly including Paragraph 11.04 regarding change of Contract Price. Contractor must submit any Change Proposal seeking an

Copyright © 2013 National Society of Professional Engineers, American Council of Engineering Companies, and American Society of Civil Engineers. All rights reserved.

adjustment of the Contract Price or the Contract Times, or both, no later than 30 days after the completion of the Work set out in the Work Change Directive. Owner must submit any Claim seeking an adjustment of the Contract Price or the Contract Times, or both, no later than 60 days after issuance of the Work Change Directive.

3. *Field Orders*: Engineer may authorize minor changes in the Work if the changes do not involve an adjustment in the Contract Price or the Contract Times and are compatible with the design concept of the completed Project as a functioning whole as indicated by the Contract Documents. Such changes will be accomplished by a Field Order and will be binding on Owner and also on Contractor, which shall perform the Work involved promptly. If Contractor believes that a Field Order justifies an adjustment in the Contract Price or Contract Times, or both, then before proceeding with the Work at issue, Contractor shall submit a Change Proposal as provided herein.

11.02 *Owner-Authorized Changes in the Work*

A. Without invalidating the Contract and without notice to any surety, Owner may, at any time or from time to time, order additions, deletions, or revisions in the Work. Such changes shall be supported by Engineer's recommendation, to the extent the change involves the design (as set forth in the Drawings, Specifications, or otherwise), or other engineering or technical matters. Such changes may be accomplished by a Change Order, if Owner and Contractor have agreed as to the effect, if any, of the changes on Contract Times or Contract Price; or by a Work Change Directive. Upon receipt of any such document, Contractor shall promptly proceed with the Work involved; or, in the case of a deletion in the Work, promptly cease construction activities with respect to such deleted Work. Added or revised Work shall be performed under the applicable conditions of the Contract Documents. Nothing in this paragraph shall obligate Contractor to undertake work that Contractor reasonably concludes cannot be performed in a manner consistent with Contractor's safety obligations under the Contract Documents or Laws and Regulations.

11.03 *Unauthorized Changes in the Work*

A. Contractor shall not be entitled to an increase in the Contract Price or an extension of the Contract Times with respect to any work performed that is not required by the Contract Documents, as amended, modified, or supplemented, except in the case of an emergency as provided in Paragraph 7.15 or in the case of uncovering Work as provided in Paragraph 14.05.

11.04 *Change of Contract Price*

A. The Contract Price may only be changed by a Change Order. Any Change Proposal for an adjustment in the Contract Price shall comply with the provisions of Paragraph 11.06. Any Claim for an adjustment of Contract Price shall comply with the provisions of Article 12.

B. An adjustment in the Contract Price will be determined as follows:

1. where the Work involved is covered by unit prices contained in the Contract Documents, then by application of such unit prices to the quantities of the items involved (subject to the provisions of Paragraph 13.03); or

2. where the Work involved is not covered by unit prices contained in the Contract Documents, then by a mutually agreed lump sum (which may include an allowance for overhead and profit not necessarily in accordance with Paragraph 11.04.C.2); or

3. where the Work involved is not covered by unit prices contained in the Contract Documents and the parties do not reach mutual agreement to a lump sum, then on

Copyright © 2013 National Society of Professional Engineers, American Council of Engineering Companies, and American Society of Civil Engineers. All rights reserved.

the basis of the Cost of the Work (determined as provided in Paragraph 13.01) plus a Contractor's fee for overhead and profit (determined as provided in Paragraph 11.04.C).

C. *Contractor's Fee*: When applicable, the Contractor's fee for overhead and profit shall be determined as follows:

1. a mutually acceptable fixed fee; or

2. if a fixed fee is not agreed upon, then a fee based on the following percentages of the various portions of the Cost of the Work:

a. for costs incurred under Paragraphs 13.01.B.1 and 13.01.B.2, the Contractor's fee shall be 15 percent;

b. for costs incurred under Paragraph 13.01.B.3, the Contractor's fee shall be five percent;

c. where one or more tiers of subcontracts are on the basis of Cost of the Work plus a fee and no fixed fee is agreed upon, the intent of Paragraphs 11.04.C.2.a and 11.04.C.2.b is that the Contractor's fee shall be based on: (1) a fee of 15 percent of the costs incurred under Paragraphs 13.01.A.1 and 13.01.A.2 by the Subcontractor that actually performs the Work, at whatever tier, and (2) with respect to Contractor itself and to any Subcontractors of a tier higher than that of the Subcontractor that actually performs the Work, a fee of five percent of the amount (fee plus underlying costs incurred) attributable to the next lower tier Subcontractor; provided, however, that for any such subcontracted work the maximum total fee to be paid by Owner shall be no greater than 27 percent of the costs incurred by the Subcontractor that actually performs the work;

d. no fee shall be payable on the basis of costs itemized under Paragraphs 13.01.B.4, 13.01.B.5, and 13.01.C;

e. the amount of credit to be allowed by Contractor to Owner for any change which results in a net decrease in cost will be the amount of the actual net decrease in cost plus a deduction in Contractor's fee by an amount equal to five percent of such net decrease; and

f. when both additions and credits are involved in any one change, the adjustment in Contractor's fee shall be computed on the basis of the net change in accordance with Paragraphs 11.04.C.2.a through 11.04.C.2.e, inclusive.

11.05 *Change of Contract Times*

A. The Contract Times may only be changed by a Change Order. Any Change Proposal for an adjustment in the Contract Times shall comply with the provisions of Paragraph 11.06. Any Claim for an adjustment in the Contract Times shall comply with the provisions of Article 12.

B. An adjustment of the Contract Times shall be subject to the limitations set forth in Paragraph 4.05, concerning delays in Contractor's progress.

11.06 *Change Proposals*

A. Contractor shall submit a Change Proposal to Engineer to request an adjustment in the Contract Times or Contract Price; appeal an initial decision by Engineer concerning the requirements of the Contract Documents or relating to the acceptability of the Work under the Contract Documents; contest a set-off against payment due; or seek other relief under

Copyright © 2013 National Society of Professional Engineers, American Council of Engineering Companies, and American Society of Civil Engineers. All rights reserved.

the Contract. The Change Proposal shall specify any proposed change in Contract Times or Contract Price, or both, or other proposed relief, and explain the reason for the proposed change, with citations to any governing or applicable provisions of the Contract Documents.

1. *Procedures*: Contractor shall submit each Change Proposal to Engineer promptly (but in no event later than 30 days) after the start of the event giving rise thereto, or after such initial decision. The Contractor shall submit supporting data, including the proposed change in Contract Price or Contract Time (if any), to the Engineer and Owner within 15 days after the submittal of the Change Proposal. The supporting data shall be accompanied by a written statement that the supporting data are accurate and complete, and that any requested time or price adjustment is the entire adjustment to which Contractor believes it is entitled as a result of said event. Engineer will advise Owner regarding the Change Proposal, and consider any comments or response from Owner regarding the Change Proposal.

2. *Engineer's Action*: Engineer will review each Change Proposal and, within 30 days after receipt of the Contractor's supporting data, either deny the Change Proposal in whole, approve it in whole, or deny it in part and approve it in part. Such actions shall be in writing, with a copy provided to Owner and Contractor. If Engineer does not take action on the Change Proposal within 30 days, then either Owner or Contractor may at any time thereafter submit a letter to the other party indicating that as a result of Engineer's inaction the Change Proposal is deemed denied, thereby commencing the time for appeal of the denial under Article 12.

3. *Binding Decision*: Engineer's decision will be final and binding upon Owner and Contractor, unless Owner or Contractor appeals the decision by filing a Claim under Article 12.

B. *Resolution of Certain Change Proposals*: If the Change Proposal does not involve the design (as set forth in the Drawings, Specifications, or otherwise), the acceptability of the Work, or other engineering or technical matters, then Engineer will notify the parties that the Engineer is unable to resolve the Change Proposal. For purposes of further resolution of such a Change Proposal, such notice shall be deemed a denial, and Contractor may choose to seek resolution under the terms of Article 12.

11.07 *Execution of Change Orders*

A. Owner and Contractor shall execute appropriate Change Orders covering:

1. changes in the Contract Price or Contract Times which are agreed to by the parties, including any undisputed sum or amount of time for Work actually performed in accordance with a Work Change Directive;

2. changes in Contract Price resulting from an Owner set-off, unless Contractor has duly contested such set-off;

3. changes in the Work which are: (a) ordered by Owner pursuant to Paragraph 11.02, (b) required because of Owner's acceptance of defective Work under Paragraph 14.04 or Owner's correction of defective Work under Paragraph 14.07, or (c) agreed to by the parties, subject to the need for Engineer's recommendation if the change in the Work involves the design (as set forth in the Drawings, Specifications, or otherwise), or other engineering or technical matters; and

4. changes in the Contract Price or Contract Times, or other changes, which embody the substance of any final and binding results under Paragraph 11.06, or Article 12.

Copyright © 2013 National Society of Professional Engineers, American Council of Engineering Companies, and American Society of Civil Engineers. All rights reserved.

B. If Owner or Contractor refuses to execute a Change Order that is required to be executed under the terms of this Paragraph 11.07, it shall be deemed to be of full force and effect, as if fully executed.

11.08 *Notification to Surety*

A. If the provisions of any bond require notice to be given to a surety of any change affecting the general scope of the Work or the provisions of the Contract Documents (including, but not limited to, Contract Price or Contract Times), the giving of any such notice will be Contractor's responsibility. The amount of each applicable bond will be adjusted to reflect the effect of any such change.

ARTICLE 12 – CLAIMS

12.01 *Claims*

A. *Claims Process*: The following disputes between Owner and Contractor shall be submitted to the Claims process set forth in this Article:

1. Appeals by Owner or Contractor of Engineer's decisions regarding Change Proposals;

2. Owner demands for adjustments in the Contract Price or Contract Times, or other relief under the Contract Documents; and

3. Disputes that Engineer has been unable to address because they do not involve the design (as set forth in the Drawings, Specifications, or otherwise), the acceptability of the Work, or other engineering or technical matters.

B. *Submittal of Claim*: The party submitting a Claim shall deliver it directly to the other party to the Contract promptly (but in no event later than 30 days) after the start of the event giving rise thereto; in the case of appeals regarding Change Proposals within 30 days of the decision under appeal. The party submitting the Claim shall also furnish a copy to the Engineer, for its information only. The responsibility to substantiate a Claim shall rest with the party making the Claim. In the case of a Claim by Contractor seeking an increase in the Contract Times or Contract Price, or both, Contractor shall certify that the Claim is made in good faith, that the supporting data are accurate and complete, and that to the best of Contractor's knowledge and belief the amount of time or money requested accurately reflects the full amount to which Contractor is entitled.

C. *Review and Resolution*: The party receiving a Claim shall review it thoroughly, giving full consideration to its merits. The two parties shall seek to resolve the Claim through the exchange of information and direct negotiations. The parties may extend the time for resolving the Claim by mutual agreement. All actions taken on a Claim shall be stated in writing and submitted to the other party, with a copy to Engineer.

D. *Mediation*:

1. At any time after initiation of a Claim, Owner and Contractor may mutually agree to mediation of the underlying dispute. The agreement to mediate shall stay the Claim submittal and response process.

2. If Owner and Contractor agree to mediation, then after 60 days from such agreement, either Owner or Contractor may unilaterally terminate the mediation process, and the Claim submittal and decision process shall resume as of the date of the termination. If the mediation proceeds but is unsuccessful in resolving the dispute, the Claim

Copyright © 2013 National Society of Professional Engineers, American Council of Engineering Companies, and American Society of Civil Engineers. All rights reserved.

submittal and decision process shall resume as of the date of the conclusion of the mediation, as determined by the mediator.

3. Owner and Contractor shall each pay one-half of the mediator's fees and costs.

E. *Partial Approval*: If the party receiving a Claim approves the Claim in part and denies it in part, such action shall be final and binding unless within 30 days of such action the other party invokes the procedure set forth in Article 17 for final resolution of disputes.

F. *Denial of Claim*: If efforts to resolve a Claim are not successful, the party receiving the Claim may deny it by giving written notice of denial to the other party. If the receiving party does not take action on the Claim within 90 days, then either Owner or Contractor may at any time thereafter submit a letter to the other party indicating that as a result of the inaction, the Claim is deemed denied, thereby commencing the time for appeal of the denial. A denial of the Claim shall be final and binding unless within 30 days of the denial the other party invokes the procedure set forth in Article 17 for the final resolution of disputes.

G. *Final and Binding Results*: If the parties reach a mutual agreement regarding a Claim, whether through approval of the Claim, direct negotiations, mediation, or otherwise; or if a Claim is approved in part and denied in part, or denied in full, and such actions become final and binding; then the results of the agreement or action on the Claim shall be incorporated in a Change Order to the extent they affect the Contract, including the Work, the Contract Times, or the Contract Price.

ARTICLE 13 – COST OF THE WORK; ALLOWANCES; UNIT PRICE WORK

13.01 *Cost of the Work*

A. *Purposes for Determination of Cost of the Work*: The term Cost of the Work means the sum of all costs necessary for the proper performance of the Work at issue, as further defined below. The provisions of this Paragraph 13.01 are used for two distinct purposes:

1. To determine Cost of the Work when Cost of the Work is a component of the Contract Price, under cost-plus-fee, time-and-materials, or other cost-based terms; or

2. To determine the value of a Change Order, Change Proposal, Claim, set-off, or other adjustment in Contract Price. When the value of any such adjustment is determined on the basis of Cost of the Work, Contractor is entitled only to those additional or incremental costs required because of the change in the Work or because of the event giving rise to the adjustment.

B. *Costs Included*: Except as otherwise may be agreed to in writing by Owner, costs included in the Cost of the Work shall be in amounts no higher than those prevailing in the locality of the Project, shall not include any of the costs itemized in Paragraph 13.01.C, and shall include only the following items:

1. Payroll costs for employees in the direct employ of Contractor in the performance of the Work under schedules of job classifications agreed upon by Owner and Contractor. Such employees shall include, without limitation, superintendents, foremen, and other personnel employed full time on the Work. Payroll costs for employees not employed full time on the Work shall be apportioned on the basis of their time spent on the Work. Payroll costs shall include, but not be limited to, salaries and wages plus the cost of fringe benefits, which shall include social security contributions, unemployment, excise, and payroll taxes, workers' compensation, health and retirement benefits, bonuses, sick leave, and vacation and holiday pay applicable

Copyright © 2013 National Society of Professional Engineers, American Council of Engineering Companies, and American Society of Civil Engineers. All rights reserved.

thereto. The expenses of performing Work outside of regular working hours, on Saturday, Sunday, or legal holidays, shall be included in the above to the extent authorized by Owner.

2. Cost of all materials and equipment furnished and incorporated in the Work, including costs of transportation and storage thereof, and Suppliers' field services required in connection therewith. All cash discounts shall accrue to Contractor unless Owner deposits funds with Contractor with which to make payments, in which case the cash discounts shall accrue to Owner. All trade discounts, rebates, and refunds and returns from sale of surplus materials and equipment shall accrue to Owner, and Contractor shall make provisions so that they may be obtained.

3. Payments made by Contractor to Subcontractors for Work performed by Subcontractors. If required by Owner, Contractor shall obtain competitive bids from subcontractors acceptable to Owner and Contractor and shall deliver such bids to Owner, who will then determine, with the advice of Engineer, which bids, if any, will be acceptable. If any subcontract provides that the Subcontractor is to be paid on the basis of Cost of the Work plus a fee, the Subcontractor's Cost of the Work and fee shall be determined in the same manner as Contractor's Cost of the Work and fee as provided in this Paragraph 13.01.

4. Costs of special consultants (including but not limited to engineers, architects, testing laboratories, surveyors, attorneys, and accountants) employed for services specifically related to the Work.

5. Supplemental costs including the following:

    a. The proportion of necessary transportation, travel, and subsistence expenses of Contractor's employees incurred in discharge of duties connected with the Work.

    b. Cost, including transportation and maintenance, of all materials, supplies, equipment, machinery, appliances, office, and temporary facilities at the Site, and hand tools not owned by the workers, which are consumed in the performance of the Work, and cost, less market value, of such items used but not consumed which remain the property of Contractor.

    c. Rentals of all construction equipment and machinery, and the parts thereof, whether rented from Contractor or others in accordance with rental agreements approved by Owner with the advice of Engineer, and the costs of transportation, loading, unloading, assembly, dismantling, and removal thereof. All such costs shall be in accordance with the terms of said rental agreements. The rental of any such equipment, machinery, or parts shall cease when the use thereof is no longer necessary for the Work.

    d. Sales, consumer, use, and other similar taxes related to the Work, and for which Contractor is liable, as imposed by Laws and Regulations.

    e. Deposits lost for causes other than negligence of Contractor, any Subcontractor, or anyone directly or indirectly employed by any of them or for whose acts any of them may be liable, and royalty payments and fees for permits and licenses.

    f. Losses and damages (and related expenses) caused by damage to the Work, not compensated by insurance or otherwise, sustained by Contractor in connection with the performance of the Work (except losses and damages within the deductible amounts of property insurance established in accordance with Paragraph 6.05), provided such losses and damages have resulted from causes

Copyright © 2013 National Society of Professional Engineers, American Council of Engineering Companies, and American Society of Civil Engineers. All rights reserved.

other than the negligence of Contractor, any Subcontractor, or anyone directly or indirectly employed by any of them or for whose acts any of them may be liable. Such losses shall include settlements made with the written consent and approval of Owner. No such losses, damages, and expenses shall be included in the Cost of the Work for the purpose of determining Contractor's fee.

g. The cost of utilities, fuel, and sanitary facilities at the Site.

h. Minor expenses such as communication service at the Site, express and courier services, and similar petty cash items in connection with the Work.

i. The costs of premiums for all bonds and insurance that Contractor is required by the Contract Documents to purchase and maintain.

C. *Costs Excluded*: The term Cost of the Work shall not include any of the following items:

1. Payroll costs and other compensation of Contractor's officers, executives, principals (of partnerships and sole proprietorships), general managers, safety managers, engineers, architects, estimators, attorneys, auditors, accountants, purchasing and contracting agents, expediters, timekeepers, clerks, and other personnel employed by Contractor, whether at the Site or in Contractor's principal or branch office for general administration of the Work and not specifically included in the agreed upon schedule of job classifications referred to in Paragraph 13.01.B.1 or specifically covered by Paragraph 13.01.B.4. The payroll costs and other compensation excluded here are to be considered administrative costs covered by the Contractor's fee.

2. Expenses of Contractor's principal and branch offices other than Contractor's office at the Site.

3. Any part of Contractor's capital expenses, including interest on Contractor's capital employed for the Work and charges against Contractor for delinquent payments.

4. Costs due to the negligence of Contractor, any Subcontractor, or anyone directly or indirectly employed by any of them or for whose acts any of them may be liable, including but not limited to, the correction of defective Work, disposal of materials or equipment wrongly supplied, and making good any damage to property.

5. Other overhead or general expense costs of any kind and the costs of any item not specifically and expressly included in Paragraph 13.01.B.

D. *Contractor's Fee*: When the Work as a whole is performed on the basis of cost-plus, Contractor's fee shall be determined as set forth in the Agreement. When the value of any Work covered by a Change Order, Change Proposal, Claim, set-off, or other adjustment in Contract Price is determined on the basis of Cost of the Work, Contractor's fee shall be determined as set forth in Paragraph 11.04.C.

E. *Documentation*: Whenever the Cost of the Work for any purpose is to be determined pursuant to this Article 13, Contractor will establish and maintain records thereof in accordance with generally accepted accounting practices and submit in a form acceptable to Engineer an itemized cost breakdown together with supporting data.

13.02 *Allowances*

A. It is understood that Contractor has included in the Contract Price all allowances so named in the Contract Documents and shall cause the Work so covered to be performed for such sums and by such persons or entities as may be acceptable to Owner and Engineer.

Copyright © 2013 National Society of Professional Engineers, American Council of Engineering Companies, and American Society of Civil Engineers. All rights reserved.

B. *Cash Allowances*: Contractor agrees that:

1. the cash allowances include the cost to Contractor (less any applicable trade discounts) of materials and equipment required by the allowances to be delivered at the Site, and all applicable taxes; and

2. Contractor's costs for unloading and handling on the Site, labor, installation, overhead, profit, and other expenses contemplated for the cash allowances have been included in the Contract Price and not in the allowances, and no demand for additional payment on account of any of the foregoing will be valid.

C. *Contingency Allowance*: Contractor agrees that a contingency allowance, if any, is for the sole use of Owner to cover unanticipated costs.

D. Prior to final payment, an appropriate Change Order will be issued as recommended by Engineer to reflect actual amounts due Contractor on account of Work covered by allowances, and the Contract Price shall be correspondingly adjusted.

13.03 *Unit Price Work*

A. Where the Contract Documents provide that all or part of the Work is to be Unit Price Work, initially the Contract Price will be deemed to include for all Unit Price Work an amount equal to the sum of the unit price for each separately identified item of Unit Price Work times the estimated quantity of each item as indicated in the Agreement.

B. The estimated quantities of items of Unit Price Work are not guaranteed and are solely for the purpose of comparison of Bids and determining an initial Contract Price. Payments to Contractor for Unit Price Work will be based on actual quantities.

C. Each unit price will be deemed to include an amount considered by Contractor to be adequate to cover Contractor's overhead and profit for each separately identified item.

D. Engineer will determine the actual quantities and classifications of Unit Price Work performed by Contractor. Engineer will review with Contractor the Engineer's preliminary determinations on such matters before rendering a written decision thereon (by recommendation of an Application for Payment or otherwise). Engineer's written decision thereon will be final and binding (except as modified by Engineer to reflect changed factual conditions or more accurate data) upon Owner and Contractor, subject to the provisions of the following paragraph.

E. Within 30 days of Engineer's written decision under the preceding paragraph, Contractor may submit a Change Proposal, or Owner may file a Claim, seeking an adjustment in the Contract Price if:

1. the quantity of any item of Unit Price Work performed by Contractor differs materially and significantly from the estimated quantity of such item indicated in the Agreement;

2. there is no corresponding adjustment with respect to any other item of Work; and

3. Contractor believes that it is entitled to an increase in Contract Price as a result of having incurred additional expense or Owner believes that Owner is entitled to a decrease in Contract Price, and the parties are unable to agree as to the amount of any such increase or decrease.

Copyright © 2013 National Society of Professional Engineers, American Council of Engineering Companies, and American Society of Civil Engineers. All rights reserved.

ARTICLE 14 – TESTS AND INSPECTIONS; CORRECTION, REMOVAL OR ACCEPTANCE OF DEFECTIVE WORK

14.01 *Access to Work*

A. Owner, Engineer, their consultants and other representatives and personnel of Owner, independent testing laboratories, and authorities having jurisdiction will have access to the Site and the Work at reasonable times for their observation, inspection, and testing. Contractor shall provide them proper and safe conditions for such access and advise them of Contractor's safety procedures and programs so that they may comply therewith as applicable.

14.02 *Tests, Inspections, and Approvals*

A. Contractor shall give Engineer timely notice of readiness of the Work (or specific parts thereof) for all required inspections and tests, and shall cooperate with inspection and testing personnel to facilitate required inspections and tests.

B. Owner shall retain and pay for the services of an independent inspector, testing laboratory, or other qualified individual or entity to perform all inspections and tests expressly required by the Contract Documents to be furnished and paid for by Owner, except that costs incurred in connection with tests or inspections of covered Work shall be governed by the provisions of Paragraph 14.05.

C. If Laws or Regulations of any public body having jurisdiction require any Work (or part thereof) specifically to be inspected, tested, or approved by an employee or other representative of such public body, Contractor shall assume full responsibility for arranging and obtaining such inspections, tests, or approvals, pay all costs in connection therewith, and furnish Engineer the required certificates of inspection or approval.

D. Contractor shall be responsible for arranging, obtaining, and paying for all inspections and tests required:

1. by the Contract Documents, unless the Contract Documents expressly allocate responsibility for a specific inspection or test to Owner;

2. to attain Owner's and Engineer's acceptance of materials or equipment to be incorporated in the Work;

3. by manufacturers of equipment furnished under the Contract Documents;

4. for testing, adjusting, and balancing of mechanical, electrical, and other equipment to be incorporated into the Work; and

5. for acceptance of materials, mix designs, or equipment submitted for approval prior to Contractor's purchase thereof for incorporation in the Work.

Such inspections and tests shall be performed by independent inspectors, testing laboratories, or other qualified individuals or entities acceptable to Owner and Engineer.

E. If the Contract Documents require the Work (or part thereof) to be approved by Owner, Engineer, or another designated individual or entity, then Contractor shall assume full responsibility for arranging and obtaining such approvals.

F. If any Work (or the work of others) that is to be inspected, tested, or approved is covered by Contractor without written concurrence of Engineer, Contractor shall, if requested by Engineer, uncover such Work for observation. Such uncovering shall be at Contractor's expense unless Contractor had given Engineer timely notice of Contractor's intention to

Copyright © 2013 National Society of Professional Engineers, American Council of Engineering Companies, and American Society of Civil Engineers. All rights reserved.

cover the same and Engineer had not acted with reasonable promptness in response to such notice.

14.03 *Defective Work*

A. *Contractor's Obligation*: It is Contractor's obligation to assure that the Work is not defective.

B. *Engineer's Authority*: Engineer has the authority to determine whether Work is defective, and to reject defective Work.

C. *Notice of Defects*: Prompt notice of all defective Work of which Owner or Engineer has actual knowledge will be given to Contractor.

D. *Correction, or Removal and Replacement*: Promptly after receipt of written notice of defective Work, Contractor shall correct all such defective Work, whether or not fabricated, installed, or completed, or, if Engineer has rejected the defective Work, remove it from the Project and replace it with Work that is not defective.

E. *Preservation of Warranties*: When correcting defective Work, Contractor shall take no action that would void or otherwise impair Owner's special warranty and guarantee, if any, on said Work.

F. *Costs and Damages*: In addition to its correction, removal, and replacement obligations with respect to defective Work, Contractor shall pay all claims, costs, losses, and damages arising out of or relating to defective Work, including but not limited to the cost of the inspection, testing, correction, removal, replacement, or reconstruction of such defective Work, fines levied against Owner by governmental authorities because the Work is defective, and the costs of repair or replacement of work of others resulting from defective Work. Prior to final payment, if Owner and Contractor are unable to agree as to the measure of such claims, costs, losses, and damages resulting from defective Work, then Owner may impose a reasonable set-off against payments due under Article 15.

14.04 *Acceptance of Defective Work*

A. If, instead of requiring correction or removal and replacement of defective Work, Owner prefers to accept it, Owner may do so (subject, if such acceptance occurs prior to final payment, to Engineer's confirmation that such acceptance is in general accord with the design intent and applicable engineering principles, and will not endanger public safety). Contractor shall pay all claims, costs, losses, and damages attributable to Owner's evaluation of and determination to accept such defective Work (such costs to be approved by Engineer as to reasonableness), and for the diminished value of the Work to the extent not otherwise paid by Contractor. If any such acceptance occurs prior to final payment, the necessary revisions in the Contract Documents with respect to the Work shall be incorporated in a Change Order. If the parties are unable to agree as to the decrease in the Contract Price, reflecting the diminished value of Work so accepted, then Owner may impose a reasonable set-off against payments due under Article 15. If the acceptance of defective Work occurs after final payment, Contractor shall pay an appropriate amount to Owner.

14.05 *Uncovering Work*

A. Engineer has the authority to require additional inspection or testing of the Work, whether or not the Work is fabricated, installed, or completed.

Copyright © 2013 National Society of Professional Engineers, American Council of Engineering Companies, and American Society of Civil Engineers. All rights reserved.

B. If any Work is covered contrary to the written request of Engineer, then Contractor shall, if requested by Engineer, uncover such Work for Engineer's observation, and then replace the covering, all at Contractor's expense.

C. If Engineer considers it necessary or advisable that covered Work be observed by Engineer or inspected or tested by others, then Contractor, at Engineer's request, shall uncover, expose, or otherwise make available for observation, inspection, or testing as Engineer may require, that portion of the Work in question, and provide all necessary labor, material, and equipment.

1. If it is found that the uncovered Work is defective, Contractor shall be responsible for all claims, costs, losses, and damages arising out of or relating to such uncovering, exposure, observation, inspection, and testing, and of satisfactory replacement or reconstruction (including but not limited to all costs of repair or replacement of work of others); and pending Contractor's full discharge of this responsibility the Owner shall be entitled to impose a reasonable set-off against payments due under Article 15.

2. If the uncovered Work is not found to be defective, Contractor shall be allowed an increase in the Contract Price or an extension of the Contract Times, or both, directly attributable to such uncovering, exposure, observation, inspection, testing, replacement, and reconstruction. If the parties are unable to agree as to the amount or extent thereof, then Contractor may submit a Change Proposal within 30 days of the determination that the Work is not defective.

14.06 *Owner May Stop the Work*

A. If the Work is defective, or Contractor fails to supply sufficient skilled workers or suitable materials or equipment, or fails to perform the Work in such a way that the completed Work will conform to the Contract Documents, then Owner may order Contractor to stop the Work, or any portion thereof, until the cause for such order has been eliminated; however, this right of Owner to stop the Work shall not give rise to any duty on the part of Owner to exercise this right for the benefit of Contractor, any Subcontractor, any Supplier, any other individual or entity, or any surety for, or employee or agent of any of them.

14.07 *Owner May Correct Defective Work*

A. If Contractor fails within a reasonable time after written notice from Engineer to correct defective Work, or to remove and replace rejected Work as required by Engineer, or if Contractor fails to perform the Work in accordance with the Contract Documents, or if Contractor fails to comply with any other provision of the Contract Documents, then Owner may, after seven days written notice to Contractor, correct or remedy any such deficiency.

B. In exercising the rights and remedies under this Paragraph 14.07, Owner shall proceed expeditiously. In connection with such corrective or remedial action, Owner may exclude Contractor from all or part of the Site, take possession of all or part of the Work and suspend Contractor's services related thereto, and incorporate in the Work all materials and equipment stored at the Site or for which Owner has paid Contractor but which are stored elsewhere. Contractor shall allow Owner, Owner's representatives, agents and employees, Owner's other contractors, and Engineer and Engineer's consultants access to the Site to enable Owner to exercise the rights and remedies under this paragraph.

C. All claims, costs, losses, and damages incurred or sustained by Owner in exercising the rights and remedies under this Paragraph 14.07 will be charged against Contractor as set-offs against payments due under Article 15. Such claims, costs, losses and damages will

Copyright © 2013 National Society of Professional Engineers, American Council of Engineering Companies, and American Society of Civil Engineers. All rights reserved.

include but not be limited to all costs of repair, or replacement of work of others destroyed or damaged by correction, removal, or replacement of Contractor's defective Work.

D. Contractor shall not be allowed an extension of the Contract Times because of any delay in the performance of the Work attributable to the exercise by Owner of Owner's rights and remedies under this Paragraph 14.07.

ARTICLE 15 – PAYMENTS TO CONTRACTOR; SET-OFFS; COMPLETION; CORRECTION PERIOD

15.01 *Progress Payments*

A. *Basis for Progress Payments*: The Schedule of Values established as provided in Article 2 will serve as the basis for progress payments and will be incorporated into a form of Application for Payment acceptable to Engineer. Progress payments on account of Unit Price Work will be based on the number of units completed during the pay period, as determined under the provisions of Paragraph 13.03. Progress payments for cost-based Work will be based on Cost of the Work completed by Contractor during the pay period.

B. *Applications for Payments*:

1. At least 20 days before the date established in the Agreement for each progress payment (but not more often than once a month), Contractor shall submit to Engineer for review an Application for Payment filled out and signed by Contractor covering the Work completed as of the date of the Application and accompanied by such supporting documentation as is required by the Contract Documents. If payment is requested on the basis of materials and equipment not incorporated in the Work but delivered and suitably stored at the Site or at another location agreed to in writing, the Application for Payment shall also be accompanied by a bill of sale, invoice, or other documentation warranting that Owner has received the materials and equipment free and clear of all Liens, and evidence that the materials and equipment are covered by appropriate property insurance, a warehouse bond, or other arrangements to protect Owner's interest therein, all of which must be satisfactory to Owner.

2. Beginning with the second Application for Payment, each Application shall include an affidavit of Contractor stating that all previous progress payments received on account of the Work have been applied on account to discharge Contractor's legitimate obligations associated with prior Applications for Payment.

3. The amount of retainage with respect to progress payments will be as stipulated in the Agreement.

C. *Review of Applications*:

1. Engineer will, within 10 days after receipt of each Application for Payment, including each resubmittal, either indicate in writing a recommendation of payment and present the Application to Owner, or return the Application to Contractor indicating in writing Engineer's reasons for refusing to recommend payment. In the latter case, Contractor may make the necessary corrections and resubmit the Application.

2. Engineer's recommendation of any payment requested in an Application for Payment will constitute a representation by Engineer to Owner, based on Engineer's observations of the executed Work as an experienced and qualified design professional, and on Engineer's review of the Application for Payment and the accompanying data and schedules, that to the best of Engineer's knowledge, information and belief:

Copyright © 2013 National Society of Professional Engineers, American Council of Engineering Companies, and American Society of Civil Engineers. All rights reserved.

a. the Work has progressed to the point indicated;

b. the quality of the Work is generally in accordance with the Contract Documents (subject to an evaluation of the Work as a functioning whole prior to or upon Substantial Completion, the results of any subsequent tests called for in the Contract Documents, a final determination of quantities and classifications for Unit Price Work under Paragraph 13.03, and any other qualifications stated in the recommendation); and

c. the conditions precedent to Contractor's being entitled to such payment appear to have been fulfilled in so far as it is Engineer's responsibility to observe the Work.

3. By recommending any such payment Engineer will not thereby be deemed to have represented that:

a. inspections made to check the quality or the quantity of the Work as it has been performed have been exhaustive, extended to every aspect of the Work in progress, or involved detailed inspections of the Work beyond the responsibilities specifically assigned to Engineer in the Contract; or

b. there may not be other matters or issues between the parties that might entitle Contractor to be paid additionally by Owner or entitle Owner to withhold payment to Contractor.

4. Neither Engineer's review of Contractor's Work for the purposes of recommending payments nor Engineer's recommendation of any payment, including final payment, will impose responsibility on Engineer:

a. to supervise, direct, or control the Work, or

b. for the means, methods, techniques, sequences, or procedures of construction, or the safety precautions and programs incident thereto, or

c. for Contractor's failure to comply with Laws and Regulations applicable to Contractor's performance of the Work, or

d. to make any examination to ascertain how or for what purposes Contractor has used the money paid on account of the Contract Price, or

e. to determine that title to any of the Work, materials, or equipment has passed to Owner free and clear of any Liens.

5. Engineer may refuse to recommend the whole or any part of any payment if, in Engineer's opinion, it would be incorrect to make the representations to Owner stated in Paragraph 15.01.C.2.

6. Engineer will recommend reductions in payment (set-offs) necessary in Engineer's opinion to protect Owner from loss because:

a. the Work is defective, requiring correction or replacement;

b. the Contract Price has been reduced by Change Orders;

c. Owner has been required to correct defective Work in accordance with Paragraph 14.07, or has accepted defective Work pursuant to Paragraph 14.04;

d. Owner has been required to remove or remediate a Hazardous Environmental Condition for which Contractor is responsible; or

Copyright © 2013 National Society of Professional Engineers, American Council of Engineering Companies, and American Society of Civil Engineers. All rights reserved.

e. Engineer has actual knowledge of the occurrence of any of the events that would constitute a default by Contractor and therefore justify termination for cause under the Contract Documents.

D. *Payment Becomes Due*:

1. Ten days after presentation of the Application for Payment to Owner with Engineer's recommendation, the amount recommended (subject to any Owner set-offs) will become due, and when due will be paid by Owner to Contractor.

E. *Reductions in Payment by Owner*:

1. In addition to any reductions in payment (set-offs) recommended by Engineer, Owner is entitled to impose a set-off against payment based on any of the following:

a. claims have been made against Owner on account of Contractor's conduct in the performance or furnishing of the Work, or Owner has incurred costs, losses, or damages on account of Contractor's conduct in the performance or furnishing of the Work, including but not limited to claims, costs, losses, or damages from workplace injuries, adjacent property damage, non-compliance with Laws and Regulations, and patent infringement;

b. Contractor has failed to take reasonable and customary measures to avoid damage, delay, disruption, and interference with other work at or adjacent to the Site;

c. Contractor has failed to provide and maintain required bonds or insurance;

d. Owner has been required to remove or remediate a Hazardous Environmental Condition for which Contractor is responsible;

e. Owner has incurred extra charges or engineering costs related to submittal reviews, evaluations of proposed substitutes, tests and inspections, or return visits to manufacturing or assembly facilities;

f. the Work is defective, requiring correction or replacement;

g. Owner has been required to correct defective Work in accordance with Paragraph 14.07, or has accepted defective Work pursuant to Paragraph 14.04;

h. the Contract Price has been reduced by Change Orders;

i. an event that would constitute a default by Contractor and therefore justify a termination for cause has occurred;

j. liquidated damages have accrued as a result of Contractor's failure to achieve Milestones, Substantial Completion, or final completion of the Work;

k. Liens have been filed in connection with the Work, except where Contractor has delivered a specific bond satisfactory to Owner to secure the satisfaction and discharge of such Liens;

l. there are other items entitling Owner to a set off against the amount recommended.

2. If Owner imposes any set-off against payment, whether based on its own knowledge or on the written recommendations of Engineer, Owner will give Contractor immediate written notice (with a copy to Engineer) stating the reasons for such action and the specific amount of the reduction, and promptly pay Contractor any amount

Copyright © 2013 National Society of Professional Engineers, American Council of Engineering Companies, and American Society of Civil Engineers. All rights reserved.

remaining after deduction of the amount so withheld. Owner shall promptly pay Contractor the amount so withheld, or any adjustment thereto agreed to by Owner and Contractor, if Contractor remedies the reasons for such action. The reduction imposed shall be binding on Contractor unless it duly submits a Change Proposal contesting the reduction.

3. Upon a subsequent determination that Owner's refusal of payment was not justified, the amount wrongfully withheld shall be treated as an amount due as determined by Paragraph 15.01.C.1 and subject to interest as provided in the Agreement.

15.02 *Contractor's Warranty of Title*

A. Contractor warrants and guarantees that title to all Work, materials, and equipment furnished under the Contract will pass to Owner free and clear of (1) all Liens and other title defects, and (2) all patent, licensing, copyright, or royalty obligations, no later than seven days after the time of payment by Owner.

15.03 *Substantial Completion*

A. When Contractor considers the entire Work ready for its intended use Contractor shall notify Owner and Engineer in writing that the entire Work is substantially complete and request that Engineer issue a certificate of Substantial Completion. Contractor shall at the same time submit to Owner and Engineer an initial draft of punch list items to be completed or corrected before final payment.

B. Promptly after Contractor's notification, Owner, Contractor, and Engineer shall make an inspection of the Work to determine the status of completion. If Engineer does not consider the Work substantially complete, Engineer will notify Contractor in writing giving the reasons therefor.

C. If Engineer considers the Work substantially complete, Engineer will deliver to Owner a preliminary certificate of Substantial Completion which shall fix the date of Substantial Completion. Engineer shall attach to the certificate a punch list of items to be completed or corrected before final payment. Owner shall have seven days after receipt of the preliminary certificate during which to make written objection to Engineer as to any provisions of the certificate or attached punch list. If, after considering the objections to the provisions of the preliminary certificate, Engineer concludes that the Work is not substantially complete, Engineer will, within 14 days after submission of the preliminary certificate to Owner, notify Contractor in writing that the Work is not substantially complete, stating the reasons therefor. If Owner does not object to the provisions of the certificate, or if despite consideration of Owner's objections Engineer concludes that the Work is substantially complete, then Engineer will, within said 14 days, execute and deliver to Owner and Contractor a final certificate of Substantial Completion (with a revised punch list of items to be completed or corrected) reflecting such changes from the preliminary certificate as Engineer believes justified after consideration of any objections from Owner.

D. At the time of receipt of the preliminary certificate of Substantial Completion, Owner and Contractor will confer regarding Owner's use or occupancy of the Work following Substantial Completion, review the builder's risk insurance policy with respect to the end of the builder's risk coverage, and confirm the transition to coverage of the Work under a permanent property insurance policy held by Owner. Unless Owner and Contractor agree otherwise in writing, Owner shall bear responsibility for security, operation, protection of the Work, property insurance, maintenance, heat, and utilities upon Owner's use or occupancy of the Work.

Copyright © 2013 National Society of Professional Engineers, American Council of Engineering Companies, and American Society of Civil Engineers. All rights reserved.

E. After Substantial Completion the Contractor shall promptly begin work on the punch list of items to be completed or corrected prior to final payment. In appropriate cases Contractor may submit monthly Applications for Payment for completed punch list items, following the progress payment procedures set forth above.

F. Owner shall have the right to exclude Contractor from the Site after the date of Substantial Completion subject to allowing Contractor reasonable access to remove its property and complete or correct items on the punch list.

15.04 *Partial Use or Occupancy*

A. Prior to Substantial Completion of all the Work, Owner may use or occupy any substantially completed part of the Work which has specifically been identified in the Contract Documents, or which Owner, Engineer, and Contractor agree constitutes a separately functioning and usable part of the Work that can be used by Owner for its intended purpose without significant interference with Contractor's performance of the remainder of the Work, subject to the following conditions:

1. At any time Owner may request in writing that Contractor permit Owner to use or occupy any such part of the Work that Owner believes to be substantially complete. If and when Contractor agrees that such part of the Work is substantially complete, Contractor, Owner, and Engineer will follow the procedures of Paragraph 15.03.A through E for that part of the Work.

2. At any time Contractor may notify Owner and Engineer in writing that Contractor considers any such part of the Work substantially complete and request Engineer to issue a certificate of Substantial Completion for that part of the Work.

3. Within a reasonable time after either such request, Owner, Contractor, and Engineer shall make an inspection of that part of the Work to determine its status of completion. If Engineer does not consider that part of the Work to be substantially complete, Engineer will notify Owner and Contractor in writing giving the reasons therefor. If Engineer considers that part of the Work to be substantially complete, the provisions of Paragraph 15.03 will apply with respect to certification of Substantial Completion of that part of the Work and the division of responsibility in respect thereof and access thereto.

4. No use or occupancy or separate operation of part of the Work may occur prior to compliance with the requirements of Paragraph 6.05 regarding builder's risk or other property insurance.

15.05 *Final Inspection*

A. Upon written notice from Contractor that the entire Work or an agreed portion thereof is complete, Engineer will promptly make a final inspection with Owner and Contractor and will notify Contractor in writing of all particulars in which this inspection reveals that the Work, or agreed portion thereof, is incomplete or defective. Contractor shall immediately take such measures as are necessary to complete such Work or remedy such deficiencies.

15.06 *Final Payment*

A. *Application for Payment*:

1. After Contractor has, in the opinion of Engineer, satisfactorily completed all corrections identified during the final inspection and has delivered, in accordance with the Contract Documents, all maintenance and operating instructions, schedules, guarantees, bonds, certificates or other evidence of insurance, certificates of

Copyright © 2013 National Society of Professional Engineers, American Council of Engineering Companies, and American Society of Civil Engineers. All rights reserved.

inspection, annotated record documents (as provided in Paragraph 7.11), and other documents, Contractor may make application for final payment.

2. The final Application for Payment shall be accompanied (except as previously delivered) by:

   a. all documentation called for in the Contract Documents;

   b. consent of the surety, if any, to final payment;

   c. satisfactory evidence that all title issues have been resolved such that title to all Work, materials, and equipment has passed to Owner free and clear of any Liens or other title defects, or will so pass upon final payment.

   d. a list of all disputes that Contractor believes are unsettled; and

   e. complete and legally effective releases or waivers (satisfactory to Owner) of all Lien rights arising out of the Work, and of Liens filed in connection with the Work.

3. In lieu of the releases or waivers of Liens specified in Paragraph 15.06.A.2 and as approved by Owner, Contractor may furnish receipts or releases in full and an affidavit of Contractor that: (a) the releases and receipts include all labor, services, material, and equipment for which a Lien could be filed; and (b) all payrolls, material and equipment bills, and other indebtedness connected with the Work for which Owner might in any way be responsible, or which might in any way result in liens or other burdens on Owner's property, have been paid or otherwise satisfied. If any Subcontractor or Supplier fails to furnish such a release or receipt in full, Contractor may furnish a bond or other collateral satisfactory to Owner to indemnify Owner against any Lien, or Owner at its option may issue joint checks payable to Contractor and specified Subcontractors and Suppliers.

B. *Engineer's Review of Application and Acceptance*:

1. If, on the basis of Engineer's observation of the Work during construction and final inspection, and Engineer's review of the final Application for Payment and accompanying documentation as required by the Contract Documents, Engineer is satisfied that the Work has been completed and Contractor's other obligations under the Contract have been fulfilled, Engineer will, within ten days after receipt of the final Application for Payment, indicate in writing Engineer's recommendation of final payment and present the Application for Payment to Owner for payment. Such recommendation shall account for any set-offs against payment that are necessary in Engineer's opinion to protect Owner from loss for the reasons stated above with respect to progress payments. At the same time Engineer will also give written notice to Owner and Contractor that the Work is acceptable, subject to the provisions of Paragraph 15.07. Otherwise, Engineer will return the Application for Payment to Contractor, indicating in writing the reasons for refusing to recommend final payment, in which case Contractor shall make the necessary corrections and resubmit the Application for Payment.

C. *Completion of Work*: The Work is complete (subject to surviving obligations) when it is ready for final payment as established by the Engineer's written recommendation of final payment.

D. *Payment Becomes Due*: Thirty days after the presentation to Owner of the final Application for Payment and accompanying documentation, the amount recommended by Engineer (less any further sum Owner is entitled to set off against Engineer's recommendation,

Copyright © 2013 National Society of Professional Engineers, American Council of Engineering Companies, and American Society of Civil Engineers. All rights reserved.

including but not limited to set-offs for liquidated damages and set-offs allowed under the provisions above with respect to progress payments) will become due and shall be paid by Owner to Contractor.

15.07 *Waiver of Claims*

A. The making of final payment will not constitute a waiver by Owner of claims or rights against Contractor. Owner expressly reserves claims and rights arising from unsettled Liens, from defective Work appearing after final inspection pursuant to Paragraph 15.05, from Contractor's failure to comply with the Contract Documents or the terms of any special guarantees specified therein, from outstanding Claims by Owner, or from Contractor's continuing obligations under the Contract Documents.

B. The acceptance of final payment by Contractor will constitute a waiver by Contractor of all claims and rights against Owner other than those pending matters that have been duly submitted or appealed under the provisions of Article 17.

15.08 *Correction Period*

A. If within one year after the date of Substantial Completion (or such longer period of time as may be prescribed by the terms of any applicable special guarantee required by the Contract Documents, or by any specific provision of the Contract Documents), any Work is found to be defective, or if the repair of any damages to the Site, adjacent areas that Contractor has arranged to use through construction easements or otherwise, and other adjacent areas used by Contractor as permitted by Laws and Regulations, is found to be defective, then Contractor shall promptly, without cost to Owner and in accordance with Owner's written instructions:

1. correct the defective repairs to the Site or such other adjacent areas;
2. correct such defective Work;
3. if the defective Work has been rejected by Owner, remove it from the Project and replace it with Work that is not defective, and
4. satisfactorily correct or repair or remove and replace any damage to other Work, to the work of others, or to other land or areas resulting therefrom.

B. If Contractor does not promptly comply with the terms of Owner's written instructions, or in an emergency where delay would cause serious risk of loss or damage, Owner may have the defective Work corrected or repaired or may have the rejected Work removed and replaced. Contractor shall pay all claims, costs, losses, and damages (including but not limited to all fees and charges of engineers, architects, attorneys, and other professionals and all court or arbitration or other dispute resolution costs) arising out of or relating to such correction or repair or such removal and replacement (including but not limited to all costs of repair or replacement of work of others).

C. In special circumstances where a particular item of equipment is placed in continuous service before Substantial Completion of all the Work, the correction period for that item may start to run from an earlier date if so provided in the Specifications.

D. Where defective Work (and damage to other Work resulting therefrom) has been corrected or removed and replaced under this paragraph, the correction period hereunder with respect to such Work will be extended for an additional period of one year after such correction or removal and replacement has been satisfactorily completed.

Copyright © 2013 National Society of Professional Engineers, American Council of Engineering Companies, and American Society of Civil Engineers. All rights reserved.

E. Contractor's obligations under this paragraph are in addition to all other obligations and warranties. The provisions of this paragraph shall not be construed as a substitute for, or a waiver of, the provisions of any applicable statute of limitation or repose.

ARTICLE 16 – SUSPENSION OF WORK AND TERMINATION

16.01 *Owner May Suspend Work*

A. At any time and without cause, Owner may suspend the Work or any portion thereof for a period of not more than 90 consecutive days by written notice to Contractor and Engineer. Such notice will fix the date on which Work will be resumed. Contractor shall resume the Work on the date so fixed. Contractor shall be entitled to an adjustment in the Contract Price or an extension of the Contract Times, or both, directly attributable to any such suspension. Any Change Proposal seeking such adjustments shall be submitted no later than 30 days after the date fixed for resumption of Work.

16.02 *Owner May Terminate for Cause*

A. The occurrence of any one or more of the following events will constitute a default by Contractor and justify termination for cause:

1. Contractor's persistent failure to perform the Work in accordance with the Contract Documents (including, but not limited to, failure to supply sufficient skilled workers or suitable materials or equipment or failure to adhere to the Progress Schedule);

2. Failure of Contractor to perform or otherwise to comply with a material term of the Contract Documents;

3. Contractor's disregard of Laws or Regulations of any public body having jurisdiction; or

4. Contractor's repeated disregard of the authority of Owner or Engineer.

B. If one or more of the events identified in Paragraph 16.02.A occurs, then after giving Contractor (and any surety) ten days written notice that Owner is considering a declaration that Contractor is in default and termination of the contract, Owner may proceed to:

1. declare Contractor to be in default, and give Contractor (and any surety) notice that the Contract is terminated; and

2. enforce the rights available to Owner under any applicable performance bond.

C. Subject to the terms and operation of any applicable performance bond, if Owner has terminated the Contract for cause, Owner may exclude Contractor from the Site, take possession of the Work, incorporate in the Work all materials and equipment stored at the Site or for which Owner has paid Contractor but which are stored elsewhere, and complete the Work as Owner may deem expedient.

D. Owner may not proceed with termination of the Contract under Paragraph 16.02.B if Contractor within seven days of receipt of notice of intent to terminate begins to correct its failure to perform and proceeds diligently to cure such failure.

E. If Owner proceeds as provided in Paragraph 16.02.B, Contractor shall not be entitled to receive any further payment until the Work is completed. If the unpaid balance of the Contract Price exceeds the cost to complete the Work, including all related claims, costs, losses, and damages (including but not limited to all fees and charges of engineers, architects, attorneys, and other professionals) sustained by Owner, such excess will be paid to Contractor. If the cost to complete the Work including such related claims, costs, losses,

Copyright © 2013 National Society of Professional Engineers, American Council of Engineering Companies, and American Society of Civil Engineers. All rights reserved.

and damages exceeds such unpaid balance, Contractor shall pay the difference to Owner. Such claims, costs, losses, and damages incurred by Owner will be reviewed by Engineer as to their reasonableness and, when so approved by Engineer, incorporated in a Change Order. When exercising any rights or remedies under this paragraph, Owner shall not be required to obtain the lowest price for the Work performed.

F. Where Contractor's services have been so terminated by Owner, the termination will not affect any rights or remedies of Owner against Contractor then existing or which may thereafter accrue, or any rights or remedies of Owner against Contractor or any surety under any payment bond or performance bond. Any retention or payment of money due Contractor by Owner will not release Contractor from liability.

G. If and to the extent that Contractor has provided a performance bond under the provisions of Paragraph 6.01.A, the provisions of that bond shall govern over any inconsistent provisions of Paragraphs 16.02.B and 16.02.D.

16.03 *Owner May Terminate For Convenience*

A. Upon seven days written notice to Contractor and Engineer, Owner may, without cause and without prejudice to any other right or remedy of Owner, terminate the Contract. In such case, Contractor shall be paid for (without duplication of any items):

1. completed and acceptable Work executed in accordance with the Contract Documents prior to the effective date of termination, including fair and reasonable sums for overhead and profit on such Work;

2. expenses sustained prior to the effective date of termination in performing services and furnishing labor, materials, or equipment as required by the Contract Documents in connection with uncompleted Work, plus fair and reasonable sums for overhead and profit on such expenses; and

3. other reasonable expenses directly attributable to termination, including costs incurred to prepare a termination for convenience cost proposal.

B. Contractor shall not be paid on account of loss of anticipated overhead, profits, or revenue, or other economic loss arising out of or resulting from such termination.

16.04 *Contractor May Stop Work or Terminate*

A. If, through no act or fault of Contractor, (1) the Work is suspended for more than 90 consecutive days by Owner or under an order of court or other public authority, or (2) Engineer fails to act on any Application for Payment within 30 days after it is submitted, or (3) Owner fails for 30 days to pay Contractor any sum finally determined to be due, then Contractor may, upon seven days written notice to Owner and Engineer, and provided Owner or Engineer do not remedy such suspension or failure within that time, terminate the contract and recover from Owner payment on the same terms as provided in Paragraph 16.03.

B. In lieu of terminating the Contract and without prejudice to any other right or remedy, if Engineer has failed to act on an Application for Payment within 30 days after it is submitted, or Owner has failed for 30 days to pay Contractor any sum finally determined to be due, Contractor may, seven days after written notice to Owner and Engineer, stop the Work until payment is made of all such amounts due Contractor, including interest thereon. The provisions of this paragraph are not intended to preclude Contractor from submitting a Change Proposal for an adjustment in Contract Price or Contract Times or otherwise for

Copyright © 2013 National Society of Professional Engineers, American Council of Engineering Companies, and American Society of Civil Engineers. All rights reserved.

expenses or damage directly attributable to Contractor's stopping the Work as permitted by this paragraph.

ARTICLE 17 – FINAL RESOLUTION OF DISPUTES

17.01 *Methods and Procedures*

A. *Disputes Subject to Final Resolution*: The following disputed matters are subject to final resolution under the provisions of this Article:

1. A timely appeal of an approval in part and denial in part of a Claim, or of a denial in full; and

2. Disputes between Owner and Contractor concerning the Work or obligations under the Contract Documents, and arising after final payment has been made.

B. *Final Resolution of Disputes*: For any dispute subject to resolution under this Article, Owner or Contractor may:

1. elect in writing to invoke the dispute resolution process provided for in the Supplementary Conditions; or

2. agree with the other party to submit the dispute to another dispute resolution process; or

3. if no dispute resolution process is provided for in the Supplementary Conditions or mutually agreed to, give written notice to the other party of the intent to submit the dispute to a court of competent jurisdiction.

ARTICLE 18 – MISCELLANEOUS

18.01 *Giving Notice*

A. Whenever any provision of the Contract Documents requires the giving of written notice, it will be deemed to have been validly given if:

1. delivered in person, by a commercial courier service or otherwise, to the individual or to a member of the firm or to an officer of the corporation for which it is intended; or

2. delivered at or sent by registered or certified mail, postage prepaid, to the last business address known to the sender of the notice.

18.02 *Computation of Times*

A. When any period of time is referred to in the Contract by days, it will be computed to exclude the first and include the last day of such period. If the last day of any such period falls on a Saturday or Sunday or on a day made a legal holiday by the law of the applicable jurisdiction, such day will be omitted from the computation.

18.03 *Cumulative Remedies*

A. The duties and obligations imposed by these General Conditions and the rights and remedies available hereunder to the parties hereto are in addition to, and are not to be construed in any way as a limitation of, any rights and remedies available to any or all of them which are otherwise imposed or available by Laws or Regulations, by special warranty or guarantee, or by other provisions of the Contract. The provisions of this paragraph will be as effective as if repeated specifically in the Contract Documents in connection with each particular duty, obligation, right, and remedy to which they apply.

Copyright © 2013 National Society of Professional Engineers, American Council of Engineering Companies, and American Society of Civil Engineers. All rights reserved.

18.04 *Limitation of Damages*

A. With respect to any and all Change Proposals, Claims, disputes subject to final resolution, and other matters at issue, neither Owner nor Engineer, nor any of their officers, directors, members, partners, employees, agents, consultants, or subcontractors, shall be liable to Contractor for any claims, costs, losses, or damages sustained by Contractor on or in connection with any other project or anticipated project.

18.05 *No Waiver*

A. A party's non-enforcement of any provision shall not constitute a waiver of that provision, nor shall it affect the enforceability of that provision or of the remainder of this Contract.

18.06 *Survival of Obligations*

A. All representations, indemnifications, warranties, and guarantees made in, required by, or given in accordance with the Contract, as well as all continuing obligations indicated in the Contract, will survive final payment, completion, and acceptance of the Work or termination or completion of the Contract or termination of the services of Contractor.

18.07 *Controlling Law*

A. This Contract is to be governed by the law of the state in which the Project is located.

18.08 *Headings*

A. Article and paragraph headings are inserted for convenience only and do not constitute parts of these General Conditions.

Copyright © 2013 National Society of Professional Engineers, American Council of Engineering Companies, and American Society of Civil Engineers. All rights reserved.

SECTION 007314 - SUPPLEMENTARY CONDITIONS - EJCDC

1.1 SUPPLEMENTARY CONDITIONS

A. Amendments:

1. These Supplementary Conditions amend or supplement EJCDC C-700 - Standard General Conditions of the Construction Contract and other provisions of the Contract Documents as indicated below.
2. All provisions not amended or supplemented remain in full force.

B. The terms used in these Supplementary Conditions, which are defined in EJCDC C-700, have the meanings assigned to them in the General Conditions.

C. (SC-1.01.A): Add following to Paragraph 1.01.A:

1. (Paragraph SC-1.01.A) Products: New material, machinery, components, equipment, fixtures, and systems forming the Work, not including machinery and equipment used for preparation, fabrication, conveying, and erection of the Work. Products may also include existing materials or components required for reuse.

D. (SC-3.01.D): Add following Paragraph immediately after Paragraph 3.01.C:

1. (Paragraph 3.01.D): Sections of Division 01 govern the execution of the Work of all Sections of the Specifications.

E. (SC-4.01.A): Delete Paragraph 4.01.A in its entirety and insert following in its place:

1. (Paragraph 4.01.A): Contract Times are identified in Document 004143 - Bid Form - Unit Price (Single-Prime Contract)

F. (SC-5.03): Delete Paragraphs 5.03.A and 5.03.B and insert following:

1. (Paragraph 5.03.A): No reports or explorations or tests of subsurface conditions at or contiguous to the Site, or drawings of physical conditions relating to existing surface or subsurface structures at the Site, are known to Owner.

G. (SC-5.06): Delete Paragraphs 5.06.A and 5.06.B and insert following:

1. (Paragraph 5.06.A): No reports or drawings related to Hazardous Environmental Conditions at the Site are known to Owner.

H. (SC-6.01.A): Amend Paragraph 6.01.A and add two Subparagraphs as follows:

1. (Paragraph 6.01.A): Delete the first sentence and substitute the following: Contractor shall furnish a performance bond and a payment bond as security for the faithful performance and payment of all of Contractor's obligations under the Contract.

a. (Subparagraph 6.01.A.1): Furnish a performance bond in the amount of 100 percent of Contract Price.
b. (Subparagraph 6.01.A.2): Furnish a payment bond in the amount of 100 percent of Contract Price.

I. (SC-6.01.B): Add following Subparagraphs to Paragraph 6.01.B:

1. (Subparagraph 6.01.B.1): Furnish Performance Bond on EJCDC C-610 standard surety bond form.
2. (Subparagraph 6.01.B.2): Furnish Payment Bond on EJCDC C-615 standard surety bond form.

J. (SC-6.03): Contractor's Insurance.

SC-6.03 Add the following new paragraph immediately after Paragraph 6.03.J:

C. The limits of liability for the insurance required by Paragraph 5.04 of the General Conditions shall provide coverage for not less than the following amounts or greater where required by Laws and Regulations:

1. Workers' Compensation, and related coverages under Paragraphs 6.03.A.1 and A.2 of the General Conditions:

a. State:	Statutory
b. Applicable Federal (e.g., Longshoreman's):	Statutory
c. Employer's Liability:	$500,000 Ea. Occurrence

2. Contractor's General Liability under Paragraphs 6.03.A.3 through A.4 of the General Conditions which shall include completed operations and product liability coverages and eliminate the exclusion with respect to property under the care, custody and control of Contractor:

a. General Aggregate	$1,000,000
b. Products - Completed Operations Aggregate	$1,000,000
c. Personal and Advertising Injury	$1,000,000
d. Each Occurrence (Bodily Injury and Property Damage)	$1,000,000

e. Property Damage liability insurance will provide Explosion, Collapse, and Under-ground coverages where applicable.

f. Excess or Umbrella Liability

General Aggregate	$1,000,000
Each Occurrence	$1,000,000

3. Automobile Liability under Paragraph 6.03.D of the General Conditions:

   a. Bodily Injury:

Each person	$500,000
Each Accident	$1,000,000

   b. Property Damage:

Each Accident	$1,000,000

4. The Contractual Liability coverage required by Paragraph 6.03.C.2 of the General Conditions shall provide coverage for not less than the following amounts:

   a. Bodily Injury:

Each person	$500,000
Each Accident	$1,000,000

   b. Property Damage:

Each Accident	$1,000,000
Annual Aggregate	$1,000,000

5. The following other persons or entities shall be included on all policies as additional insureds:

   a. The City of Rome, Georgia

   b. InSite Engineering, LLC

K. (SC-6.05): Delete Paragraph 6.05.A in its entirety and insert the following in its place:

L.

A. Contractor shall purchase and maintain property insurance upon the Work at the Site in the amount of the full replacement cost thereof. Contractor shall be responsible for any deductible or self-insured retention. This insurance shall:

1. include the interests of Owner, Contractor, Subcontractors, Engineer, and Subconsultants and the officers, directors, partners, employees, agents and other consultants and subcontractors of any of them, each of whom is deemed to have an insurable interest and shall be listed as an insured or loss payee;

2. be written on a Builder's Risk "all-risk" policy form that shall at least include insurance for physical loss and damage to the Work, temporary buildings, falsework, and materials and equipment in transit and shall insure against at least the following perils or causes of loss: fire, lightning, extended coverage, theft, vandalism and malicious mischief, earthquake, collapse, debris removal, demolition occasioned by enforcement of Laws and Regulations, water damage (other than that caused by flood), and such other perils or causes of loss as may be specifically required by these Supplementary Conditions.

3. include expenses incurred in the repair or replacement of any insured property (including but not limited to fees and charges of engineers and architects);

4. cover materials and equipment stored at the Site or at another location that was agreed to in writing by Owner prior to being incorporated in the Work, provided that such materials and equipment have been included in an Application for Payment recommended by Engineer;

5. allow for partial utilization of the Work by Owner;

6. include testing and startup;

7. be maintained in effect until final payment is made unless otherwise agreed to in writing by Owner, Contractor, and Engineer with 30 days written notice to each other loss payee to whom a certificate of insurance has been issued; and

8. comply with the requirements of Paragraph 5.06.C of the General Conditions.

M. (SC-11.04.C): Amend Paragraph 11.04.C.1 to read as follows:

1. (Subparagraph 11.04.C.1): The Agreement identifies the following:

   a. (Subparagraph 11.04.C.1.a): Overhead and profit fees applicable to changes in the Work, whether additions to or deductions from the Work, on which the Contract Price is based.
   b. (Subparagraph 11.04.C.1.b): Fees for changes in Subcontract work (both additions and deductions).
   c. (Subparagraph 11.04.C.1.c): Contractor shall apply fees noted above to Subcontractor's gross (net plus fee) costs on additional work.

END OF DOCUMENT 007314

SECTION 011000 - SUMMARY

PART 1 - GENERAL

1.1 SUMMARY

A. Section Includes:

1. Contract description.
2. Work by Owner or other Work at the Site.
3. Owner-furnished products.
4. Contractor's use of Site and premises.
5. Future work.
6. Work sequence.
7. Owner occupancy.
8. Permits.
9. Specification conventions.

1.2 CONTRACT DESCRIPTION

A. Work of the Project includes the construction of a 8” PVC gravity sanitary sewer line, HDPE force main, sanitary sewer service laterals, 6’ diameter precast wet well, sanitary sewer pumping station, package sanitary sewer pumping station, manholes, manhole frames and covers, connection to existing sanitary sewer system, access drive, erosion control, traffic control, all associated appurtenances, grouting and abandonment of existing sanitary sewer lines, and manhole decommissioning located at Horseleg Creek Road, Rome, Georgia 30161.

B. Perform Work of Contract under stipulated sum/price Contract with Owner according to Conditions of Contract.

1.3 WORK BY OWNER OR OTHERS

A. Owner will not be installing any items or performing in work.

B. Work under this Contract will include:

1. The construction of a 8” PVC gravity sanitary sewer line, HDPE force main, sanitary sewer service laterals, 6’ diameter precast wet well, sanitary sewer pumping station, package sanitary sewer pumping station, manholes, manhole frames and covers, connection to existing sanitary sewer system, access drive, erosion control, traffic control, all associated appurtenances, grouting and abandonment of existing sanitary sewer lines, and manhole decommissioning located at Horseleg Creek Road, Rome, Georgia 30161.

1.4 OWNER-FURNISHED PRODUCTS

1. N/A

B. Contractor's Responsibilities:

1. Review Owner-reviewed Shop Drawings, Product Data, and Samples.
2. Receive and unload products at Site; inspect for completeness or damage jointly with Owner.
3. Handle, store, install, and finish products.
4. Repair or replace items damaged after receipt.

C. Items furnished by Owner for installation by Contractor:

1. N/A

1.5 CONTRACTOR'S USE OF SITE

A. Access to Site: Construction site is within the existing plant.

B. Construction Operations: Limited to Areas of Work Required

1. Noisy and Disruptive Operations (such as Use of Jack Hammers and Other Noisy Equipment): Not allowed in close proximity to existing structures outside of regular hours of operation.

C. Time Restrictions for Performing Work: The Contractor will be limited to the following working times:

1. Work Days: Monday to Friday.
2. Work Times: 8 A.M. to 5 P.M.
3. The Owner and Engineer may approve alternate work hours upon request.
4. No work will be allowed on weekends or holiday or outside the times specified above except in case of emergency, and then only as required to alleviate the immediacy of the emergency.

D. Utility Outages and Shutdown:

1. N/A

E. Construction Plan: Before start of construction, submit three copies of construction plan regarding access to Work, and use of Site for acceptance by Owner. After acceptance of plan, construction operations shall comply with accepted plan unless deviations are accepted by Owner in writing.

1.6 FUTURE WORK

A. N/A

1.7 WORK SEQUENCE

A. Construct Work in stages in order to accommodate Owner's occupancy requirements during construction period. Coordinate construction schedule and operations with Engineer, Operator, and Owner.

1.8 OWNER OCCUPANCY

A. Schedule and substantially complete designated portions of the Work for occupancy before Substantial Completion of the entire Work.

1. Owner intends to occupy and operate the existing wastewater treatment plant and will coordinate and work with contractor on schedule, etc.
2. Owner's use and occupancy of designated areas before Substantial Completion of the entire Project do not relieve Contractor of responsibility to maintain specified insurance coverages on a 100 percent basis until date of final payment.

B. Cooperate with Owner to minimize conflict and to facilitate Owner's operations.

1.9 PERMITS

A. Furnish necessary permits for construction of Work including the following:
1. Business License for Prime and Subs

1.10 SPECIFICATION CONVENTIONS

A. These Specifications are written in imperative mood and streamlined form. This imperative language is directed to Contractor unless specifically noted otherwise. The words "shall be" are included by inference where a colon (:) is used within sentences or phrases.

PART 2 - PRODUCTS - Not Used

PART 3 - EXECUTION - Not Used

END OF SECTION 011000

This page intentionally left blank.

EJCDC
ENGINEERS JOINT CONTRACT DOCUMENTS COMMITTEE

Contractor's Application for Payment No. _____

	Application Period:	Application Date:
To (Owner):	From (Contractor):	Via (Engineer):
Project:	Contract:	
Owner's Contract No.:	Contractor's Project No.:	Engineer's Project No.:

Application For Payment

Change Order Summary

Approved Change Orders		
Number	Additions	Deductions
TOTALS		
NET CHANGE BY CHANGE ORDERS		

1. ORIGINAL CONTRACT PRICE..... $ _____

2. Net change by Change Orders..... $ _____

3. Current Contract Price (Line 1 ± 2)..... $ _____

4. TOTAL COMPLETED AND STORED TO DATE

(Column F total on Progress Estimates)..... $ _____

5. RETAINAGE:

a. X _____ **Work Completed**..... $ _____

b. X _____ **Stored Material**..... $ _____

c. Total Retainage (Line 5.a + Line 5.b)..... $ _____

6. AMOUNT ELIGIBLE TO DATE (Line 4 - Line 5.c)..... $ _____

7. LESS PREVIOUS PAYMENTS (Line 6 from prior Application)..... $ _____

8. AMOUNT DUE THIS APPLICATION..... $ _____

9. BALANCE TO FINISH, PLUS RETAINAGE

(Column G total on Progress Estimates + Line 5.c above)..... $ _____

Contractor's Certification

The undersigned Contractor certifies, to the best of its knowledge, the following:
(1) All previous progress payments received from Owner on account of Work done under the Contract have been applied on account to discharge Contractor's legitimate obligations incurred in connection with the Work covered by prior Applications for Payment;
(2) Title to all Work, materials and equipment incorporated in said Work, or otherwise listed in or covered by this Application for Payment, will pass to Owner at time of payment free and clear of all Liens, security interests, and encumbrances (except such as are covered by a bond acceptable to Owner indemnifying Owner against any such Liens, security interest, or encumbrances); and
(3) All the Work covered by this Application for Payment is in accordance with the Contract Documents and is not defective.

Contractor Signature

By:	Date:

Payment of: $ _____
(Line 8 or other - attach explanation of the other amount)

is recommended by: _____ _____
(Engineer) (Date)

Payment of: $ _____
(Line 8 or other - attach explanation of the other amount)

is approved by: _____ _____
(Owner) (Date)

Approved by: _____ _____
Funding or Financing Entity (if applicable) (Date)

© 2013 National Society of Professional Engineers for EJCDC. All rights reserved.

Progress Estimate - Lump Sum Work

Contractor's Application

For (Contract):	Application Number:
Application Period:	Application Date:

			Work Completed		E	F		G
A		B	C	D	Materials Presently Stored (not in C or D)	Total Completed and Stored to Date (C + D + E)	% (F / B)	Balance to Finish (B - F)
Specification Section No.	Description	Scheduled Value ($)	From Previous Application (C+D)	This Period				
	Totals							

© 2013 National Society of Professional Engineers for EJCDC. All rights reserved.

Progress Estimate - Unit Price Work

Contractor's Application

For (Contract):	Application Number:
Application Period:	Application Date:

A					B	C	D	E	F		
Item		Contract Information				Estimated Quantity Installed	Value of Work Installed to Date	Materials Presently Stored (not in C)	Total Completed and Stored to Date (D + E)	% (F / B)	Balance to Finish (B F)
Bid Item No.	Description	Item Quantity	Units	Unit Price	Total Value of Item ($)						
	Totals										

© 2013 National Society of Professional Engineers for EJCDC. All rights reserved.

Stored Material Summary | **Contractor's Application**

For (Contract):	Application Number:
Application Period:	Application Date:

A		B	C		D		E		F		G
					Stored Previously				Incorporated in Work		
Bid Item No.	Supplier Invoice No.	Submittal No. (with Specification Section No.)	Storage Location	Description of Materials or Equipment Stored	Date Placed into Storage (Month/Year)	Amount ($)	Amount Stored this Month ($)	Subtotal Amount Completed and Stored to Date (D + E)	Date (Month/ Year)	Amount ($)	Materials Remaining in Storage ($) (D + E - F)
				Totals							

© 2013 National Society of Professional Engineers for EJCDC. All rights reserved.

EJCDC
ENGINEERS JOINT CONTRACT DOCUMENTS COMMITTEE

Work Change Directive No.

Date of Issuance: Effective Date:

Owner: Owner's Contract No.:

Contractor: Contractor's Project No.:

Engineer: Engineer's Project No.:

Project: Contract Name:

Contractor is directed to proceed promptly with the following change(s):

Description:

Attachments: *[List documents supporting change]*

Purpose for Work Change Directive:

Directive to proceed promptly with the Work described herein, prior to agreeing to changes on Contract Price and Contract Time, is issued due to: *[check one or both of the following]*

☐ Non-agreement on pricing of proposed change.

☐ Necessity to proceed for schedule or other Project reasons.

Estimated Change in Contract Price and Contract Times (non-binding, preliminary):

Contract Price $ [increase] [decrease].

Contract Time days [increase] [decrease].

Basis of estimated change in Contract Price:

☐ Lump Sum ☐ Unit Price

☐ Cost of the Work ☐ Other

RECOMMENDED:	AUTHORIZED BY:	RECEIVED:
By:	By:	By:
Engineer (Authorized Signature)	Owner (Authorized Signature)	Contractor (Authorized Signature)
Title:	Title:	Title:
Date:	Date:	Date:

Approved by Funding Agency (if applicable)

By: Date:

Title:

This page intentionally left blank.

EJCDC
ENGINEERS JOINT CONTRACT DOCUMENTS COMMITTEE

Change Order No. _____

Date of Issuance:	Effective Date:
Owner:	Owner's Contract No.:
Contractor:	Contractor's Project No.:
Engineer:	Engineer's Project No.:
Project:	Contract Name:

The Contract is modified as follows upon execution of this Change Order:

Description:

Attachments: *[List documents supporting change]*

CHANGE IN CONTRACT PRICE	**CHANGE IN CONTRACT TIMES** ***[note changes in Milestones if applicable]***
Original Contract Price: $_____	Original Contract Times: Substantial Completion: _____ Ready for Final Payment: _____ days or dates
[Increase] [Decrease] from previously approved Change Orders No. ___ to No. ___: $_____	[Increase] [Decrease] from previously approved Change Orders No. ___ to No. ___: Substantial Completion: _____ Ready for Final Payment: _____ days
Contract Price prior to this Change Order: $_____	Contract Times prior to this Change Order: Substantial Completion: _____ Ready for Final Payment: _____ days or dates
[Increase] [Decrease] of this Change Order: $_____	[Increase] [Decrease] of this Change Order: Substantial Completion: _____ Ready for Final Payment: _____ days or dates
Contract Price incorporating this Change Order: $_____	Contract Times with all approved Change Orders: Substantial Completion: _____ Ready for Final Payment: _____ days or dates

RECOMMENDED:	ACCEPTED:	ACCEPTED:
By: _____	By: _____	By: _____
Engineer (if required)	Owner (Authorized Signature)	Contractor (Authorized Signature)
Title: _____	Title _____	Title _____
Date: _____	Date _____	Date _____

Approved by Funding Agency (if applicable)

By: _____ Date:

Title: _____

This page intentionally left blank.

EJCDC
ENGINEERS JOINT CONTRACT DOCUMENTS COMMITTEE

Field Order No. _____

Date of Issuance:	Effective Date:
Owner:	Owner's Contract No.:
Contractor:	Contractor's Project No.:
Engineer:	Engineer's Project No.:
Project:	Contract Name:

Contractor is hereby directed to promptly execute this Field Order, issued in accordance with General Conditions Paragraph 11.01, for minor changes in the Work without changes in Contract Price or Contract Times. If Contractor considers that a change in Contract Price or Contract Times is required, submit a Change Proposal before proceeding with this Work.

Reference: _____ _____

Specification(s) Drawing(s) / Detail(s)

Description:

Attachments:

ISSUED:	RECEIVED:
By: _____	By: _____
Engineer (Authorized Signature)	Contractor (Authorized Signature)
Title: _____	Title: _____
Date: _____	Date: _____

Copy to: Owner

This page intentionally left blank.

InSite Engineering, LLC

Request **F**or **I**nformation **F**orm

Project Name: Horselegleg Creek Sanitary Sewer Pump Station Addition
Project Number: 16120.04
Owner Bid Number: xxx-xx

RFI Number	Submitted To	Submitted By	Copies To
	InSite Engineering, LLC 5800 Feldspar Way Hoover, AL 35244		
Date			

Subject	Discipline	Co-Author

Specification Section	Drawing Reference	

Information Requested (including suggest solution, if applicable):	Date Required:

Response

By responding to the RFI, we do not agree to any additional costs and/or time. Any additional costs and/or time shall be submitted in accordance with the requirements of the Contract Documents.

Date Answered: _____ Answered By: _____

This page intentionally left blank.

SECTION 012500 - SUBSTITUTION PROCEDURES

PART 1 - GENERAL

1.1 SECTION INCLUDES

A. Quality assurance.

B. Product substitution procedures.

1.2 QUALITY ASSURANCE

A. Contract is based on products and standards established in Contract Documents without consideration of proposed substitutions.

B. Products specified define standard of quality, type, function, dimension, appearance, and performance required.

C. Substitution Proposals: Permitted for specified products except where specified otherwise. Do not substitute products unless substitution has been accepted and approved in writing by Owner.

1.3 PRODUCT SUBSTITUTION PROCEDURES

A. Document 002113 - Instructions to Bidders specifies time restrictions for submitting requests for substitutions during Bidding period.

PART 2 - PRODUCTS - Not Used

PART 3 - EXECUTION - Not Used

END OF SECTION 012500

This page intentionally left blank.

SECTION 012500.1 – SUBSTITUTION REQUEST FORM

GENERAL: Form shall be submitted via General Contractor to Engineer.

PROJECT TITLE AND NO. The City of Rome, Georgia
Horseleg Creek Sanitary Sewer Pump Station Addition
Project No. 16120.04 (Owner Bid # XXX-XX)

TO: INSITE ENGINEERING, LLC
5800 Feldspar Way
Hoover, Alabama 35244
Telephone: 205.733.9696

THIS SUBSTITUTION REQUEST IS FOR: [ ] CAUSE [ ]
CONVENIENCE

ATTN: _____

DATE OF REQUEST: _____ DATE OF NOTICE TO PROCEED:_____

SPECIFIED ITEM: _____

Section_____ Paragraph _____

REASON FOR SUBSTITUTION:_____

PROPOSED SUBSTITUTE: (indicate manufacturer and model) _____

_____

Attach complete description, catalog, spec data, and laboratory tests.

1. Describe change to Contract Documents proposed substitute will require for its proper installation.

   _____

   _____

2. Will substitution affect electrical requirements, wiring, piping, equipment, systems, ductwork, etc. indicated in Contract Documents?
   ___ No ___ Yes; Explain: _____

   _____

3. Proposed substitution affects other trades. ___ No ___ Yes; Explain: _____

_____

_____

4. List all differences between proposed substitute and specified product/material: (noise, weight, power, size, gage, finishes, dimensions, etc.). Attach separate sheet if necessary.

_____

_____

5. List (on separate sheet) the availability of maintenance services and replacement materials for proposed substitution.

6. List (on separate sheet) company names, addresses, phone numbers and contact persons of fabricators and suppliers for proposed substitution.

7. Will substitution affect the construction schedule?
___ No ___ Yes; Explain _____

_____

_____

8. If the substitution request is accepted, it will result in: No cost impact _____

Lower cost (How much) _____ Added cost (How much) _____

9. Are there any additional license fees and/or royalties pending on the proposed substitute. ____ No ____ Yes; Explain: _____

_____

_____

10. The undersigned certifies/agrees:
- Same warranty/guarantee will be furnished for proposed substitute as for specified product.
- Same maintenance service and source of replacement parts, as applicable, is available.
- Payment will be made for changes to building design, including Architect/Engineer design, detailing and construction costs caused by the substitution.

SUBMITTED BY: (Supplier or Subcontractor)

Firm: _____

Address: _____

Name and Title of Person Signing: _____

Signature: _____

Telephone No.: _____ Date: _____

REVIEWED AND APPROVED for Subcontractor or Supplier by (General Contractor):

Firm: _____

Address: _____

Name and Title of Person Signing: _____

Signature: _____

Telephone No.: _____ Date: _____

11. ENGINEER'S REVIEW AND ACTION:

___ Accepted - Make submittals in accordance with Specification Section 01330.

___ Accepted as Noted - Make submittals in accordance with Specification Section 01330.

___ Rejected - Use specified materials.

___ Received too late - Use specified materials.

Signature: _____ Date: _____

Remarks: _____

_____

This page intentionally left blank.

SECTION 013000 - ADMINISTRATIVE REQUIREMENTS

PART 1 - GENERAL

1.1 SECTION INCLUDES

A. Coordination and Project conditions.

B. Preconstruction meeting.

C. Site mobilization meeting.

D. Progress meetings.

E. Preinstallation meetings.

F. Closeout meeting.

G. Alteration procedures.

1.2 COORDINATION AND PROJECT CONDITIONS

A. Coordinate scheduling, submittals, and Work of various Sections of Project Manual to ensure efficient and orderly sequence of installation of interdependent construction elements with provisions for accommodating items installed later.

B. Verify that utility requirements and characteristics of operating equipment are compatible with building utilities. Coordinate Work of various Sections having interdependent responsibilities for installing, connecting to, and placing operating equipment in service.

C. Coordinate space requirements, supports, and installation of mechanical and electrical Work indicated diagrammatically on Drawings. Follow routing shown for pipes, ducts, and conduit as closely as practical; place runs parallel with lines of building. Use spaces efficiently to maximize accessibility for other installations, for maintenance, and for repairs.

1. Coordination Drawings: Prepare as required to coordinate all portions of Work. Show relationship and integration of different construction elements that require coordination during fabrication or installation to fit in space provided or to function as intended. Indicate locations where space is limited for installation and access and where sequencing and coordination of installations are important.

D. Coordination Meetings: In addition to other meetings specified in this Section, hold coordination meetings with personnel and Subcontractors to ensure coordination of Work.

E. In finished areas except as otherwise indicated, conceal pipes, ducts, and wiring within construction. Coordinate locations of fixtures and outlets with finish elements.

1.3 PRECONSTRUCTION MEETING

A. Engineer will schedule and preside over meeting after Contracts have been executed.

B. Attendance Required: Engineer, Owner, and Contractor.

C. Possible Agenda Items:

1. Execution of Owner-Contractor Agreement.
2. Submission of executed bonds and insurance certificates.
3. Distribution of Contract Documents.
4. Submission of list of Subcontractors, list of products, schedule of values, and Progress Schedule.
5. Designation of personnel representing parties in Contract, and Engineer.
6. Communication procedures.
7. Procedures and processing of requests for interpretations, field decisions, field orders, submittals, substitutions, Applications for Payments, proposal request, Change Orders, and Contract closeout procedures.
8. Scheduling.
9. Critical Work sequencing.
10. Scheduling activities

D. Engineer will Record minutes and distribute to participants within 2 days after meeting to Owner, Contractor, and those affected by decisions made.

1.4 SITE MOBILIZATION MEETING

A. N/A

1.5 PROGRESS MEETINGS

A. Schedule and administer meetings throughout progress of the Work at maximum monthly intervals.

B. Engineer will make arrangements for meetings, prepare agenda with copies for participants, and preside over meetings.

C. Attendance Required: Job superintendent, major Subcontractors, Contractors, and suppliers, and Engineer, owner, as appropriate to agenda topics for each meeting.

D. Probable Agenda Items:

1. Review minutes of previous meetings.
2. Review of Work progress.
3. Field observations, problems, and decisions.
4. Identification of problems impeding planned progress.
5. Review of submittal schedule and status of submittals.
6. Review of off-site fabrication and delivery schedules.
7. Maintenance of Progress Schedule.

8. Corrective measures to regain projected schedules.
9. Planned progress during succeeding work period.
10. Coordination of projected progress.
11. Maintenance of quality and work standards.
12. Effect of proposed changes on Progress Schedule and coordination.
13. Other business relating to Work.

E. Engineer will record minutes and distribute to participants within 2 days after meeting to owner, contractor, and those affected by decisions made.

1.6 PREINSTALLATION MEETINGS

A. When required in individual Specification Sections, convene pre-installation meetings at Project Site one (1) week before starting Work of specific Section.

B. Require attendance of parties directly affecting, or affected by, Work of specific Section.

C. Prepare agenda and preside over meeting:

1. Review conditions of installation, preparation, and installation procedures.
2. Review coordination with related Work.

D. Record minutes and distribute copies to participants within two (2) days after meeting, and those affected by decisions made.

1.7 CLOSEOUT MEETING

A. N/A – Final Inspection will be Scheduled by Engineer after completion.

PART 2 - PRODUCTS - Not Used

PART 3 - EXECUTION

3.1 ALTERATION PROCEDURES

A. Work area will be within the existing wastewater treatment plant. The Owner will be traversing the work area during progress of construction. Cooperate with Owner in scheduling operations to minimize conflict and to permit continuous usage.
1. Keep utility and service outages to a minimum and perform only after written approval of Owner.
2. Clean construction areas daily. Clean spillage, overspray, rock, dirt and any construction debris in work areas daily.

B. Materials: As specified in product Sections; match existing products with new products for patching and extending Work.

C. Employ skilled installer to perform alteration and renovation Work.

D. Cut, move, or remove items as necessary for access to alterations and renovation Work. Replace and restore at completion.

E. Remove unsuitable material not marked for salvage, including rotted wood, corroded metals, and deteriorated masonry and concrete. Replace materials as specified for finished Work.

F. Remove debris and abandoned items from area and from concealed spaces.

G. Prepare surface and remove surface finishes to permit installation of new Work and finishes.

H. Close openings in exterior surfaces to protect existing Work from weather and extremes of temperature and humidity.

I. Remove, cut, and patch Work to minimize damage and to permit restoring products and finishes to new condition.

J. Refinish existing visible surfaces to remain in renovated rooms and spaces, to renewed condition for each material, with neat transition to adjacent finishes.

K. Where new Work abuts or aligns with existing Work, provide smooth and even transition. Patch Work to match existing adjacent Work in texture and appearance.

L. When finished surfaces are cut so that smooth transition with new Work is not possible, terminate existing surface along straight line at natural line of division and submit recommendation to Architect/Engineer for review.

M. Where change of plane of ¼” or more occurs submit recommendations to the engineer on process for ensuring smooth transitions.

N. Trim existing doors to clear new floor finish. Refinish trim to original condition.

O. Patch or replace portions of existing surfaces that are damaged, lifted, discolored, or showing other imperfections.

P. Finish surfaces as specified in individual product Sections.

END OF SECTION 013000

SECTION 013216 - CONSTRUCTION PROGRESS SCHEDULE

PART 1 - GENERAL

1.1 SECTION INCLUDES

A. Submittals.

B. Format.

C. Review and evaluation.

D. Distribution.

1.2 SUBMITTALS

A. Within seven (7) days after date of Owner-Contractor Agreement, submit draft of proposed complete bar chart schedule for review. Include written certification that Subcontractors have reviewed and accepted proposed schedule.

B. Within seven (7) days after joint review, submit revised Progress Schedule.

C. Submit updated schedules at Progress Meetings.

D. Schedule Updates:

1. Overall percent complete, projected and actual.
2. Completion progress by listed activity and sub activity, to within five working days prior to submittal.
3. Changes in Work scope and activities modified since submittal.
4. Delays in submittals or resubmittals, deliveries, or Work.
5. Adjusted or modified sequences of Work.
6. Other identifiable changes.
7. Revised projections of progress and completion.

E. Narrative Progress Report:

1. Submit with each submission of Progress Schedule.
2. Summary of Work completed during the past period between reports.
3. Work planned during the next period.
4. Explanation of differences between summary of Work completed and Work planned in previously submitted report.
5. Current and anticipated delaying factors and estimated impact on other activities and completion milestones.
6. Corrective action taken or proposed.

1.3 FORMAT

A. Computer-generated bar chart schedule to include at least:

1. Identification and listing in chronological order of those activities reasonably required to complete the Work, including:

a. Subcontract Work.
b. Major equipment design, fabrication, factory testing, and delivery dates including required lead times.
c. Move-in and other preliminary activities.
d. Equipment and equipment system test and startup activities.
e. Project closeout and cleanup.
f. Work sequences, constraints, and milestones.

2. Listings identified by Specification Section number.
3. Identification of the following:

a. Horizontal time frame by year, month, and week.
b. Duration, early start, and completion for each activity and sub activity.
c. Critical activities and Project float.
d. Sub schedules to further define critical portions of Work.

1.4 REVIEW AND EVALUATION

A. Participate in joint review and evaluation of schedules with Architect/Engineer at each submittal.

B. Evaluate Project status to determine Work behind schedule and Work ahead of schedule.

C. After review, revise schedules incorporating results of review, and resubmit within (7) days.

1.5 DISTRIBUTION

A. Following joint review, distribute copies of updated schedules to Contractor's Project site file, to Subcontractors, suppliers, Architect/Engineer, Owner, and other concerned parties.

B. Instruct recipients to promptly report, in writing, problems anticipated by projections shown in schedules.

PART 2 - PRODUCTS - Not Used

PART 3 - EXECUTION - Not Used

END OF SECTION 013216

SECTION 013300 - SUBMITTAL PROCEDURES

PART 1 - GENERAL

1.1 SECTION INCLUDES

A. Definitions.

B. Submittal procedures.

C. Proposed product list.

D. Product data.

E. Use of electronic CAD files of Project Drawings.

F. Shop Drawings.

G. Samples.

H. Design data.

I. Test reports.

J. Certificates.

K. Manufacturer's instructions.

L. Manufacturer's field reports.

M. Erection Drawings.

N. Construction photographs.

O. Contractor review.

P. Architect/Engineer review.

1.2 DEFINITIONS

A. Action Submittals: Written and graphic information and physical samples that require Engineer's responsive action.

B. Informational Submittals: Written and graphic information and physical Samples that do not require Engineer's responsive action. Submittals may be rejected for not complying with requirements.

1.3 SUBMITTAL PROCEDURES

A. Transmit each submittal with Engineer-accepted forms.

B. Sequentially number transmittal forms. Mark revised submittals with original number and sequential alphabetic suffix.

C. Identify: Project, Contractor, Subcontractor and supplier, pertinent Drawing and detail number, and Specification Section number appropriate to submittal.

D. Apply Contractor's stamp, signed or initialed, certifying that review, approval, verification of products required, field dimensions, adjacent construction Work, and coordination of information is according to requirements of the Work and Contract Documents.

E. Schedule submittals to expedite Project, and deliver to Engineer post electronic submittals as PDF electronic via email. It is the contractor's responsibility to ensure the submittal make it to the Engineer. Coordinate submission of related items.

F. For each submittal for review, allow 15 days excluding delivery time to and from Contractor.

G. Identify variations in Contract Documents and product or system limitations that may be detrimental to successful performance of completed Work.

H. Allow space on submittals for Contractor and Architect/Engineer review stamps.

I. When revised for resubmission, identify changes made since previous submission.

J. Distribute copies of reviewed submittals as appropriate. Instruct parties to promptly report inability to comply with requirements.

K. Submittals not requested will not be recognized nor processed.

L. Incomplete Submittals: Architect/Engineer will not review. Complete submittals for each item are required. Delays resulting from incomplete submittals are not the responsibility of Architect/Engineer.

1.4 PROPOSED PRODUCT LIST

A. Within 15 days after date of Notice to Proceed, submit list of major products proposed for use, with name of manufacturer, trade name, and model number of each product.

B. For products specified only by reference standards, indicate manufacturer, trade name, model or catalog designation, and reference standards.

1.5 PRODUCT DATA

A. Product Data: Action Submittal: Submit to Engineer for review for assessing conformance with information given and design concept expressed in Contract Documents.

B. Submit number of copies Contractor requires, plus Three copies Engineer will retain. (if submitting hard copies.

or

C. Electronic submittals as PDF electronic files to Engineer.

D. Mark each copy to identify applicable products, models, options, and other data. Supplement manufacturers' standard data to provide information specific to this Project.

E. Indicate product utility and electrical characteristics, utility connection requirements, and location of utility outlets for service for functional equipment and appliances.

F. After review, produce copies and distribute.

1.6 ELECTRONIC CAD FILES OF PROJECT DRAWINGS

A. Electronic CAD Files of Project Drawings: May only be used to expedite production of Shop Drawings for the Project. Use for other Projects or purposes is not allowed.

B. Electronic CAD Files of Project Drawings: Distributed only under the following conditions:

1. Use of files is solely at receiver's risk. Architect/Engineer does not warrant accuracy of files. Receiving files in electronic form does not relieve receiver of responsibilities for measurements, dimensions, and quantities set forth in Contract Documents. In the event of ambiguity, discrepancy, or conflict between information on electronic media and that in Contract Documents, notify Architect/Engineer of discrepancy and use information in hard-copy Drawings and Specifications.
2. CAD files do not necessarily represent the latest Contract Documents, existing conditions, and as-built conditions. Receiver is responsible for determining and complying with these conditions and for incorporating addenda and modifications.
3. User is responsible for removing information not normally provided on Shop Drawings and removing references to Contract Documents. Shop Drawings submitted with information associated with other trades or with references to Contract Documents will not be reviewed and will be immediately returned.
4. Receiver shall not hold Architect/Engineer responsible for data or file clean-up required to make files usable, nor for error or malfunction in translation, interpretation, or use of this electronic information.
5. Receiver shall understand that even though Architect/Engineer has computer virus scanning software to detect presence of computer viruses, there is no guarantee that computer viruses are not present in files or in electronic media.
6. Receiver shall not hold Architect/Engineer responsible for such viruses or their consequences, and shall hold Architect/Engineer harmless against costs, losses, or damage caused by presence of computer virus in files or media.

C. Costs: $100 per file, plus administrative fee of $50 per request paid in advance by certified check or money order payable to Architect/Engineer.

1.7 SHOP DRAWINGS

A. Shop Drawings: Action Submittal: Submit to Architect/Engineer for assessing conformance with information given and design concept expressed in Contract Documents.

B. Indicate special utility and electrical characteristics, utility connection requirements, and location of utility outlets for service for functional equipment and appliances.

C. When required by individual Specification Sections, provide Shop Drawings signed and sealed by a professional Engineer responsible for designing components shown on Shop Drawings.

1. Include signed and sealed calculations to support design.
2. Submit Shop Drawings and calculations in form suitable for submission to and approval by authorities having jurisdiction.
3. Make revisions and provide additional information when required by authorities having jurisdiction.

D. Submit in form of one reproducible transparency or as an electronic .pdf.

E. After review, produce copies and distribute.

1.8 SAMPLES

A. Samples: Action Submittal: Submit to Architect/Engineer for assessing conformance with information given and design concept expressed in Contract Documents.

B. Samples for Selection as Specified in Product Sections:

1. Submit to Architect/Engineer for aesthetic, color, and finish selection.
2. Submit Samples of finishes, textures, and patterns for Architect/Engineer selection.

C. Submit Samples to illustrate functional and aesthetic characteristics of products, with integral parts and attachment devices. Coordinate Sample submittals for interfacing work.

D. Include identification on each Sample, with full Project information.

E. Submit number of Samples specified in individual Specification Sections; Engineer will retain 2 Sample.

F. Reviewed Samples that may be used in the Work are indicated in individual Specification Sections.

G. After review, produce copies and distribute.

1.9 DESIGN DATA

A. Informational Submittal: Submit data for Engineer's knowledge as Contract administrator or for Owner.

B. Submit information for assessing conformance with information given and design concept expressed in Contract Documents.

1.10 TEST REPORTS

A. Informational Submittal: Submit reports for Engineer's knowledge as Contract administrator or for Owner.

B. Submit test reports for information for assessing conformance with information given and design concept expressed in Contract Documents.

1.11 CERTIFICATES

A. Informational Submittal: Submit certification by manufacturer, installation/application Subcontractor, or Contractor to Engineer, in quantities specified for Product Data.

B. Indicate material or product conforms to or exceeds specified requirements. Submit supporting reference data, affidavits, and certifications as appropriate.

C. Certificates may be recent or previous test results on material or product but must be acceptable to Engineer.

1.12 MANUFACTURER'S INSTRUCTIONS

A. Informational Submittal: Submit manufacturer's installation instructions for Engineer's knowledge as Contract administrator or for Owner.

B. Submit printed instructions for delivery, storage, assembly, installation, startup, adjusting, and finishing, to Engineer in quantities specified for Product Data.

C. Indicate special procedures, perimeter conditions requiring special attention, and special environmental criteria required for application or installation.

1.13 MANUFACTURER'S FIELD REPORTS

A. Informational Submittal: Submit reports for Architect/Engineer's knowledge as Contract administrator or for Owner.

B. Submit report within 2 days of observation to Engineer for information.

C. Submit reports for information for assessing conformance with information given and design concept expressed in Contract Documents.

1.14 ERECTION DRAWINGS

A. N/A

1.15 CONSTRUCTION PHOTOGRAPHS

A. Provide photographs of site and construction throughout progress of Work produced by an experienced photographer acceptable to Architect/Engineer.

B. Monthly submit photographs with Application for Payment.

C. Photopgraphs may be submitted on a disk.

D. Take photographs as evidence of existing Project conditions as follows:

1. Interior views:
2. Exterior views:

E. Digital Images: Deliver complete set of digital image electronic files on CD-ROM to Owner with Project record documents. Identify electronic media with date photographs were taken. Submit images that have same aspect ratio as sensor, uncropped.

1. Digital Images: Uncompressed TIFF format, produced by digital camera with minimum sensor size of 4.0 megapixels, and image resolution of not less than 1024 by 768 pixels.
2. Date and Time: Include date and time in filename for each image.

1.16 CONTRACTOR REVIEW

A. Review for compliance with Contract Documents and approve submittals before transmitting to Engineer

B. Contractor: Responsible for:

1. Determination and verification of materials including manufacturer's catalog numbers.
2. Determination and verification of field measurements and field construction criteria.
3. Checking and coordinating information in submittal with requirements of Work and of Contract Documents.
4. Determination of accuracy and completeness of dimensions and quantities.
5. Confirmation and coordination of dimensions and field conditions at Site.
6. Construction means, techniques, sequences, and procedures.
7. Safety precautions.
8. Coordination and performance of Work of all trades.

C. Stamp, sign or initial, and date each submittal to certify compliance with requirements of Contract Documents.

D. Do not fabricate products or begin Work for which submittals are required until approved submittals have been received from Architect/Engineer.

1.17 ENGINEER REVIEW

A. Do not make "mass submittals" to Engineer. "Mass submittals" are defined as six or more submittals or items in one day or 20 or more submittals or items in one week. If "mass

submittals" are received, Engineer's review time stated above will be extended as necessary to perform proper review. Engineer will review "mass submittals" based on priority determined by Engineer after consultation with Owner and Contractor.

B. Informational submittals and other similar data are for Engineer's information, do not require Engineer's responsive action, and will not be reviewed or returned with comment.

C. Submittals made by Contractor that are not required by Contract Documents may be returned without action.

D. Submittal approval does not authorize changes to Contract requirements unless accompanied by Change Order, Field Order, or Work Change Directive.

E. Owner may withhold monies due to Contractor to cover additional costs beyond the second submittal review.

PART 2 - PRODUCTS - Not Used

PART 3 - EXECUTION - Not Used

END OF SECTION 013300

This page intentionally left blank.

SECTION 014000 - QUALITY REQUIREMENTS

PART 1 - GENERAL

1.1 SECTION INCLUDES

A. Quality control.

B. Tolerances.

C. References.

D. Labeling.

E. Mockup requirements.

F. Testing and inspection services.

G. Manufacturers' field services.

1.2 QUALITY CONTROL

A. Monitor quality control over suppliers, manufacturers, products, services, Site conditions, and workmanship, to produce Work of specified quality.

B. Comply with specified standards as the minimum quality for the Work except where more stringent tolerances, codes, or specified requirements indicate higher standards or more precise workmanship.

C. Perform Work using persons qualified to produce required and specified quality.

D. Supervise performance of Work in such manner and by such means to ensure that Work, whether completed or in progress, will not be subjected to harmful, dangerous, damaging, or otherwise deleterious exposure during construction period.

1.3 TOLERANCES

A. Monitor fabrication and installation tolerance control of products to produce acceptable Work. Do not permit tolerances to accumulate.

B. Comply with manufacturers' recommended tolerances and tolerance requirements in reference standards. When such tolerances conflict with Contract Documents, request clarification from Architect/Engineer before proceeding.

1.4 REFERENCES

A. For products or workmanship specified by association, trade, or other consensus standards, comply with requirements of standard except when more rigid requirements are specified or are required by applicable codes.

B. Conform to reference standard by date of issue current as of date of Contract Documents except where specific date is established by code.

C. Obtain copies of standards and maintain on Site when required by product Specification Sections.

D. When requirements of indicated reference standards conflict with Contract Documents, request clarification from Engineer before proceeding.

E. Neither contractual relationships, duties, or responsibilities of parties in Contract nor those of Architect/Engineer shall be altered from Contract Documents by mention or inference in reference documents.

1.5 LABELING

A. Attach label from agency approved by authorities having jurisdiction for products, assemblies, and systems required to be labeled by applicable code**.**

B. Label Information: Include manufacturer's or fabricator's identification, approved agency identification, and the following information, as applicable, on each label:

1. Model number.
2. Serial number.
3. Performance characteristics.

C. Manufacturer's Nameplates, Trademarks, Logos, and Other Identifying Marks on Products: Not allowed on surfaces exposed to view in public areas, interior or exterior.

1.6 MOCK-UP REQUIREMENTS

A. Tests will be performed under provisions identified in this Section and identified in individual product Specification Sections.

B. Assemble and erect specified or indicated items with specified or indicated attachment and anchorage devices, flashings, seals, and finishes.

C. Accepted mockups shall be comparison standard for remaining Work.

1.7 TESTING AND INSPECTION SERVICES

A. Owner will employ and pay for specified services of an independent firm to perform testing and inspection. (If required)

B. Independent firm will perform tests, inspections, and other services specified in individual Specification Sections and as required by owner.

1. Laboratory: Authorized to operate in the State of Georgia**.**

C. Reports shall be submitted by independent firm to Engineer, Contractor, and authorities having jurisdiction, in Georgia indicating observations and results of tests and compliance or noncompliance with Contract Documents.

D. Cooperate with independent firm; furnish samples of materials, design mix, equipment, tools, storage, safe access, and assistance by incidental labor as requested.

1. Notify Engineer and independent firm 24 hours before expected time for operations requiring services.
2. Make arrangements with independent firm and pay for additional Samples and tests required for Contractor's use.

E. Employment of testing agency or laboratory shall not relieve Contractor of obligation to perform Work according to requirements of Contract Documents.

F. Retesting or re-inspection required because of nonconformance with specified or indicated requirements shall be performed by same independent firm on instructions from Engineer. Payment for retesting or re-inspection will be charged to Contractor by deducting testing charges from Contract Sum/Price.

G. Agency Responsibilities:

1. Test Samples of mixes submitted by Contractor.
2. Provide qualified personnel at Site. Cooperate with Architect/Engineer and Contractor in performance of services.
3. Perform indicated sampling and testing of products according to specified standards.
4. Ascertain compliance of materials and mixes with requirements of Contract Documents.
5. Promptly notify Architect/Engineer and Contractor of observed irregularities or nonconformance of Work or products.
6. Perform additional tests required by Engineer.
7. Attend preconstruction meetings and progress meetings.

H. Agency Reports: After each test, promptly submit 2 copies of report to Engineer, Contractor, and authorities having jurisdiction. When requested by Architect/Engineer, provide interpretation of test results.

I. Limits on Testing Authority:

1. Agency or laboratory may not release, revoke, alter, or enlarge on requirements of Contract Documents.
2. Agency or laboratory may not approve or accept any portion of the Work.
3. Agency or laboratory may not assume duties of Contractor.
4. Agency or laboratory has no authority to stop the Work.

1.8 MANUFACTURER'S FIELD SERVICES

A. When specified in individual specification Sections, require material or product suppliers or manufacturers to provide qualified staff personnel to observe Site conditions, conditions of surfaces and installation, quality of workmanship, startup of equipment, testing, adjusting, and balancing of equipment, commissioning and misc. other services as applicable, and to initiate instructions when necessary.

B. Report observations and Site decisions or instructions given to applicators or installers that are supplemental or contrary to manufacturer's written instructions.

PART 2 - PRODUCTS - Not Used

PART 3 - EXECUTION - Not Used

END OF SECTION 014000

SECTION 014200 - REFERENCES

PART 1 - GENERAL

1.1 RELATED DOCUMENTS

A. Drawings and general provisions of the Contract, including General and Supplementary Conditions and other Division 01 Specification Sections, apply to this Section.

1.2 DEFINITIONS

A. General: Basic Contract definitions are included in the Conditions of the Contract.

B. "Approved": When used to convey Engineer's action on Contractor's submittals, applications, and requests, "approved" is limited to Engineer's duties and responsibilities as stated in the Conditions of the Contract.

C. "Directed": A command or instruction by Engineer. Other terms including "requested," "authorized," "selected," "required," and "permitted" have the same meaning as "directed."

D. "Indicated": Requirements expressed by graphic representations or in written form on Drawings, in Specifications, and in other Contract Documents. Other terms including "shown," "noted," "scheduled," and "specified" have the same meaning as "indicated."

E. "Regulations": Laws, ordinances, statutes, and lawful orders issued by authorities having jurisdiction, and rules, conventions, and agreements within the construction industry that control performance of the Work.

F. "Furnish": Supply and deliver to Project site, ready for unloading, unpacking, assembly, installation, and similar operations.

G. "Install": Operations at Project site including unloading, temporarily storing, unpacking, assembling, erecting, placing, anchoring, applying, working to dimension, finishing, curing, protecting, cleaning, and similar operations.

H. "Provide": Furnish and install, complete and ready for the intended use.

I. "Project Site": Space available for performing construction activities. The extent of Project site is shown on Drawings and may or may not be identical with the description of the land on which Project is to be built.

1.3 INDUSTRY STANDARDS

A. Applicability of Standards: Unless the Contract Documents include more stringent requirements, applicable construction industry standards have the same force and effect as if

bound or copied directly into the Contract Documents to the extent referenced. Such standards are made a part of the Contract Documents by reference.

B. Publication Dates: Comply with standards in effect as of date of the Contract Documents unless otherwise indicated.

C. Copies of Standards: Each entity engaged in construction on Project should be familiar with industry standards applicable to its construction activity. Copies of applicable standards are not bound with the Contract Documents.

1. Where copies of standards are needed to perform a required construction activity, obtain copies directly from publication source.

1.4 ABBREVIATIONS AND ACRONYMS

A. Industry Organizations: Where abbreviations and acronyms are used in Specifications or other Contract Documents, they shall mean the recognized name of the entities indicated in Thomson Gale's "Encyclopedia of Associations" or in Columbia Books' "National Trade & Professional Associations of the U.S."

B. Industry Organizations: Where abbreviations and acronyms are used in Specifications or other Contract Documents, they shall mean the recognized name of the entities in the following list. Names, telephone numbers, and Web sites are subject to change and are believed to be accurate and up-to-date as of the date of the Contract Documents.

AA	Aluminum Association (The) www.aluminum.org	(703) 358-2960
AABC	Associated Air Balance Council www.aabchq.com	(202) 737-0202
AAMA	American Architectural Manufacturers Association www.aamanet.org	(847) 303-5664
AASHTO	American Association of State Highway and Transportation Officials www.transportation.org	(202) 624-5800
AATCC	American Association of Textile Chemists and Colorists www.aatcc.org	(919) 549-8141
ABAA	Air Barrier Association of America www.airbarrier.org	(866) 956-5888
ABMA	American Bearing Manufacturers Association www.abma-dc.org	(202) 367-1155
ACI	American Concrete Institute www.concrete.org	(248) 848-3700

ACPA	American Concrete Pipe Association www.concrete-pipe.org	(972) 506-7216
AEIC	Association of Edison Illuminating Companies, Inc. (The) www.aeic.org	(205) 257-2530
AF&PA	American Forest & Paper Association www.afandpa.org	(800) 878-8878 (202) 463-2700
AGA	American Gas Association www.aga.org	(202) 824-7000
AHAM	Association of Home Appliance Manufacturers www.aham.org	(202) 872-5955
AHRI	Air-Conditioning, Heating, andRefrigeration Institute, The www.ahrinet.org	(703) 524-8800
AI	Asphalt Institute www.asphaltinstitute.org	(859) 288-4960
AIA	American Institute of Architects (The) www.aia.org	(800) 242-3837 (202) 626-7300
AISC	American Institute of Steel Construction www.aisc.org	(800) 644-2400 (312) 670-2400
AISI	American Iron and Steel Institute www.steel.org	(202) 452-7100
AITC	American Institute of Timber Construction www.aitc-glulam.org	(303) 792-9559
ALSC	American Lumber Standard Committee, Incorporated www.alsc.org	(301) 972-1700
AMCA	Air Movement and Control Association International, Inc. www.amca.org	(847) 394-0150
ANSI	American National Standards Institute www.ansi.org	(202) 293-8020
AOSA	Association of Official Seed Analysts, Inc. www.aosaseed.com	(405) 780-7372
APA	APA - The Engineered Wood Association www.apawood.org	(253) 565-6600
APA	Architectural Precast Association www.archprecast.org	(239) 454-6989

API	American Petroleum Institute www.api.org	(202) 682-8000
ARI	Air-Conditioning & Refrigeration Institute www.ari.org	(703) 524-8800
ARMA	Asphalt Roofing Manufacturers Association www.asphaltroofing.org	(202) 207-0917
ASCE	American Society of Civil Engineers www.asce.org	(800) 548-2723 (703) 295-6300
ASCE/SEI	American Society of Civil Engineers/Structural Engineering Institute (See ASCE)	
ASHRAE	American Society of Heating, Refrigerating and Air-Conditioning Engineers www.ashrae.org	(800) 527-4723 (404) 636-8400
ASME	ASME International (American Society of Mechanical Engineers International) www.asme.org	(800) 843-2763 (973) 882-1170
ASSE	American Society of Sanitary Engineering www.asse-plumbing.org	(440) 835-3040
ASTM	ASTM International (American Society for Testing and Materials International) www.astm.org	(610) 832-9500
ATIS	Alliance for Telecommunications Industry Solutions www.atis.org	(202) 628-6380
AWCMA	American Window Covering Manufacturers Association (Now WCMA)	
AWCI	Association of the Wall and Ceiling Industry www.awci.org	(703) 534-8300
AWI	Architectural Woodwork Institute www.awinet.org	(571) 323-3636
AWPA	American Wood Protection Association (Formerly: American Wood Preservers' Association) www.awpa.com	(205) 733-4077
AWS	American Welding Society www.aws.org	(800) 443-9353 (305) 443-9353

AWWA	American Water Works Association www.awwa.org	(800) 926-7337 (303) 794-7711
BHMA	Builders Hardware Manufacturers Association www.buildershardware.com	(212) 297-2122
BIA	Brick Industry Association (The) www.bia.org	(703) 620-0010
BICSI	BICSI, Inc. www.bicsi.org	(800) 242-7405 (813) 979-1991
BIFMA	BIFMA International (Business and Institutional Furniture Manufacturer's Association International) www.bifma.com	(616) 285-3963
BISSC	Baking Industry Sanitation Standards Committee www.bissc.org	(866) 342-4772
CCC	Carpet Cushion Council www.carpetcushion.org	(610) 527-3880
CDA	Copper Development Association www.copper.org	(800) 232-3282 (212) 251-7200
CEA	Canadian Electricity Association www.canelect.ca	(613) 230-9263
CEA	Consumer Electronics Association www.ce.org	(866) 858-1555 (703) 907-7600
CFFA	Chemical Fabrics & Film Association, Inc. www.chemicalfabricsandfilm.com	(216) 241-7333
CGA	Compressed Gas Association www.cganet.com	(703) 788-2700
CIMA	Cellulose Insulation Manufacturers Association www.cellulose.org	(888) 881-2462 (937) 222-2462
CISCA	Ceilings & Interior Systems Construction Association www.cisca.org	(630) 584-1919
CISPI	Cast Iron Soil Pipe Institute www.cispi.org	(423) 892-0137
CLFMI	Chain Link Fence Manufacturers Institute www.chainlinkinfo.org	(301) 596-2583

CPA	Composite Panel Association www.pbmdf.com	(703) 724-1128
CRI	Carpet and Rug Institute (The) www.carpet-rug.com	(800) 882-8846 (706) 278-3176
CRRC	Cool Roof Rating Council www.coolroofs.org	(866) 465-2523 (510) 485-7175
CRSI	Concrete Reinforcing Steel Institute www.crsi.org	(847) 517-1200 (800) 328-6306
CRRC	Cool Roof Rating Council www.coolroofs.org	(866) 465-2523 (510) 485-7175
CSA	Canadian Standards Association www.csa.ca	(800) 463-6727 (416) 747-4000
CSA	CSA International (Formerly: IAS - International Approval Services) www.csa-international.org	(866) 797-4272 (416) 747-4000
CSI	Construction Specifications Institute (The) www.csinet.org	(800) 689-2900 (703) 684-0300
CSSB	Cedar Shake & Shingle Bureau www.cedarbureau.org	(604) 820-7700
CTI	Cooling Technology Institute (Formerly: Cooling Tower Institute) www.cti.org	(281) 583-4087
DHI	Door and Hardware Institute www.dhi.org	(703) 222-2010
ECA	Electrical Components Association www.ec-central.org	(703)907-8024
EIA	Electronic Industries Alliance www.eia.org	(703) 907-7500
EIMA	EIFS Industry Members Association www.eima.com	(800) 294-3462 (770) 968-7945
EJCDC	Engineers Joint Contract Documents Committee http://content.asce.org/ejcdc/	(703) 295-6000
EJMA	Expansion Joint Manufacturers Association, Inc. www.ejma.org	(914) 332-0040

ESD	ESD Association (Electrostatic Discharge Association) www.esda.org	(315) 339-6937
ETL SEMCO	Intertek ETL SEMCO (Formerly: ITS - Intertek Testing Service NA) www.intertek-etlsemko.com	(800) 967-5352
FIBA	Federation Internationale de Basketball (The International Basketball Federation) www.fiba.com	41 22 545 00 00
FIVB	Federation Internationale de Volleyball (The International Volleyball Federation) www.fivb.ch	41 21 345 35 35
FM Approvals	FM Approvals LLC www.fmglobal.com	(781) 762-4300
FM Global	FM Global (Formerly: FMG - FM Global) www.fmglobal.com	(401) 275-3000
FRSA	Florida Roofing, Sheet Metal & Air Conditioning Contractors Association, Inc. www.floridaroof.com	(407) 671-3772
FSA	Fluid Sealing Association www.fluidsealing.com	(610) 971-4850
FSC	Forest Stewardship Council www.fsc.org	49 228 367 66 0
GA	Gypsum Association www.gypsum.org	(301) 277-8686
GANA	Glass Association of North America www.glasswebsite.com	(785) 271-0208
GRI	(Part of GSI)	
GS	Green Seal www.greenseal.org	(202) 872-6400
GSI	Geosynthetic Institute www.geosynthetic-institute.org	(610) 522-8440
HI	Hydronics Institute www.gamanet.org	(908) 464-8200

HI/GAMA	Hydronics Institute/Gas Appliance Manufacturers Association Division of Air-Conditioning, Heating, and Refrigeration Institute (AHRI) www.ahrinet.org	(908) 464-8200
HMMA	Hollow Metal Manufacturers Association (Part of NAAMM)	
HPVA	Hardwood Plywood & Veneer Association www.hpva.org	(703) 435-2900
HPW	H. P. White Laboratory, Inc. www.hpwhite.com	(410) 838-6550
IAPSC	International Association of Professional Security Consultants www.iapsc.org	(515) 282-8192
ICBO	International Conference of Building Officials www.iccsafe.org	(888) 422-7233
ICEA	Insulated Cable Engineers Association, Inc. www.icea.net	(770) 830-0369
ICRI	International Concrete Repair Institute, Inc. www.icri.org	(847) 827-0830
ICPA	International Cast Polymer Association www.icpa-hq.org	(703) 525-0320
IEC	International Electrotechnical Commission www.iec.ch	41 22 919 02 11
IEEE	Institute of Electrical and Electronics Engineers, Inc. (The) www.ieee.org	(212) 419-7900
IES	Illuminating Engineering Society of North America www.iesna.org	(703) 525-0320
IEST	Institute of Environmental Sciences and Technology www.iest.org	(847) 255-1561
IGMA	Insulating Glass Manufacturers Alliance www.igmaonline.org	(613) 233-1510
ILI	Indiana Limestone Institute of America, Inc. www.iliai.com	(812) 275-4426
ISA	Instrumentation, Systems, and Automation Society, The	(919) 549-8411

	www.isa.org	
ISO	International Organization for Standardization www.iso.ch	41 22 749 01 11
ISSFA	International Solid Surface Fabricators Association www.issfa.net	(877) 464-7732 (801) 341-7360
ITS	Intertek Testing Service NA (Now ETL SEMCO)	
ITU	International Telecommunication Union www.itu.int/home	41 22 730 51 11
KCMA	Kitchen Cabinet Manufacturers Association www.kcma.org	(703) 264-1690
LGSEA	Light Gauge Steel Engineers Association www.arcat.com	(202) 263-4488
LMA	Laminating Materials Association (Now part of CPA)	
LPI	Lightning Protection Institute www.lightning.org	(800) 488-6864
MBMA	Metal Building Manufacturers Association www.mbma.com	(216) 241-7333
MCA	Metal Construction Association www.metalconstruction.org	(847) 375-4718
MFMA	Maple Flooring Manufacturers Association, Inc. www.maplefloor.org	(888) 480-9138
MFMA	Metal Framing Manufacturers Association, Inc. www.metalframingmfg.org	(312) 644-6610
MH	Material Handling (Now MHIA)	
MHIA	Material Handling Industry of America www.mhia.org	(800) 345-1815 (704) 676-1190
MIA	Marble Institute of America www.marble-institute.com	(440) 250-9222
MPI	Master Painters Institute www.paintinfo.com	(888) 674-8937 (604) 298-7578

MSS	Manufacturers Standardization Society of The Valve and Fittings Industry Inc. www.mss-hq.com	(703) 281-6613
NAAMM	National Association of Architectural Metal Manufacturers www.naamm.org	(630) 942-6591
NACE	NACE International (National Association of Corrosion Engineers International) www.nace.org	(800) 797-6223 (281) 228-6200
NADCA	National Air Duct Cleaners Association www.nadca.com	(202) 737-2926
NAGWS	National Association for Girls and Women in Sport www.aahperd.org/nagws/	(800) 213-7193, ext. 453
NAIMA	North American Insulation Manufacturers Association www.naima.org	(703) 684-0084
NBGQA	National Building Granite Quarries Association, Inc. www.nbgqa.com	(800) 557-2848
NCAA	National Collegiate Athletic Association (The) www.ncaa.org	(317) 917-6222
NCMA	National Concrete Masonry Association www.ncma.org	(703) 713-1900
NCTA	National Cable & Telecommunications Association www.ncta.com	(202) 222-2300
NEBB	National Environmental Balancing Bureau www.nebb.org	(301) 977-3698
NECA	National Electrical Contractors Association www.necanet.org	(301) 657-3110
NeLMA	Northeastern Lumber Manufacturers' Association www.nelma.org	(207) 829-6901
NEMA	National Electrical Manufacturers Association www.nema.org	(703) 841-3200
NETA	InterNational Electrical Testing Association www.netaworld.org	(888) 300-6382 (269) 488-6382
NFHS	National Federation of State High School Associations www.nfhs.org	(317) 972-6900

NFPA	NFPA (National Fire Protection Association) www.nfpa.org	(800) 344-3555 (617) 770-3000
NFRC	National Fenestration Rating Council www.nfrc.org	(301) 589-1776
NGA	National Glass Association www.glass.org	(866) 342-5642 (703) 442-4890
NHLA	National Hardwood Lumber Association www.natlhardwood.org	(800) 933-0318 (901) 377-1818
NLGA	National Lumber Grades Authority www.nlga.org	(604) 524-2393
NOFMA	NOFMA: The Wood Flooring Manufacturers Association (Formerly: National Oak Flooring Manufacturers Association) www.nofma.org	(901) 526-5016
NOMMA	National Ornamental & Miscellaneous Metals Association www.nomma.org	(888) 516-8585
NRCA	National Roofing Contractors Association www.nrca.net	(800) 323-9545 (847) 299-9070
NRMCA	National Ready Mixed Concrete Association www.nrmca.org	(888) 846-7622 (301) 587-1400
NSF	NSF International (National Sanitation Foundation International) www.nsf.org	(800) 673-6275 (734) 769-8010
NSSGA	National Stone, Sand & Gravel Association www.nssga.org	(800) 342-1415 (703) 525-8788
NTMA	National Terrazzo & Mosaic Association, Inc. (The) www.ntma.com	(800) 323-9736 (540) 751-0930
NWFA	National Wood Flooring Association www.nwfa.org	(800) 422-4556 (636) 519-9663
PCI	Precast/Prestressed Concrete Institute www.pci.org	(312) 786-0300
PDI	Plumbing & Drainage Institute www.pdionline.org	(800) 589-8956 (978) 557-0720

PGI	PVC Geomembrane Institute http://pgi-tp.cee.uiuc.edu	(217) 333-3929
PTI	Post-Tensioning Institute www.post-tensioning.org	(248) 848-3180
RCSC	Research Council on Structural Connections www.boltcouncil.org	
RFCI	Resilient Floor Covering Institute www.rfci.com	(706) 882-3833
RIS	Redwood Inspection Service www.redwoodinspection.com	(925) 935-1499
SAE	SAE International www.sae.org	(877) 606-7323 (724) 776-4841
SCAQMD	South Coast Air Quality Management District www.aqmd.com	(909) 396-2000
SCTE	Society of Cable Telecommunications Engineers www.scte.org	(800) 542-5040 (610) 363-6888
SDI	Steel Deck Institute www.sdi.org	(847) 458-4647
SDI	Steel Door Institute www.steeldoor.org	(440) 899-0010
SEFA	Scientific Equipment and Furniture Association www.sefalabs.com	(877) 294-5424 (516) 294-5424
SEI/ASCE	Structural Engineering Institute/American Society of Civil Engineers (See ASCE)	
SIA	Security Industry Association www.siaonline.org	(866) 817-8888 (703) 683-2075
SJI	Steel Joist Institute www.steeljoist.org	(843) 626-1995
SMA	Screen Manufacturers Association www.smacentral.org	(561) 533-0991
SMACNA	Sheet Metal and Air Conditioning Contractors' National Association www.smacna.org	(703) 803-2980

SMPTE	Society of Motion Picture and Television Engineers www.smpte.org	(914) 761-1100
SPFA	Spray Polyurethane Foam Alliance (Formerly: SPI/SPFD - The Society of the Plastics Industry, Inc.; Spray Polyurethane Foam Division) www.sprayfoam.org	(800) 523-6154
SPIB	Southern Pine Inspection Bureau (The) www.spib.org	(850) 434-2611
SPRI	Single Ply Roofing Industry www.spri.org	(781) 647-7026
SSINA	Specialty Steel Industry of North America www.ssina.com	(800) 982-0355 (202) 342-8630
SSPC	SSPC: The Society for Protective Coatings www.sspc.org	(877) 281-7772 (412) 281-2331
STI	Steel Tank Institute www.steeltank.com	(847) 438-8265
SWI	Steel Window Institute www.steelwindows.com	(216) 241-7333
SWPA	Submersible Wastewater Pump Association www.swpa.org	(847) 681-1868
TCA	Tilt-Up Concrete Association www.tilt-up.org	(319) 895-6911
TCNA	Tile Council of North America, Inc. www.tileusa.com	(864) 646-8453
TEMA	Tubular Exchanger Manufacturers Association www.tema.org	(914) 332-0040
TIA/EIA	Telecommunications Industry Association/Electronic Industries Alliance www.tiaonline.org	(703) 907-7700
TMS	The Masonry Society www.masonrysociety.org	(303) 939-9700
TPI	Truss Plate Institute, Inc. www.tpinst.org	(703) 683-1010
TPI	Turfgrass Producers International www.turfgrasssod.org	(800) 405-8873 (847) 649-5555

TRI	Tile Roofing Institute www.tileroofing.org	(312) 670-4177
UL	Underwriters Laboratories Inc. www.ul.com	(877) 854-3577 (847) 272-8800
UNI	Uni-Bell PVC Pipe Association www.uni-bell.org	(972) 243-3902
USAV	USA Volleyball www.usavolleyball.org	(888) 786-5539 (719) 228-6800
USGBC	U.S. Green Building Council www.usgbc.org	(800) 795-1747
USITT	United States Institute for Theatre Technology, Inc. www.usitt.org	(800) 938-7488 (315) 463-6463
WASTEC	Waste Equipment Technology Association www.wastec.org	(800) 424-2869 (202) 244-4700
WCLIB	West Coast Lumber Inspection Bureau www.wclib.org	(800) 283-1486 (503) 639-0651
WCMA	Window Covering Manufacturers Association www.wcmanet.org	(212) 297-2122
WDMA	Window & Door Manufacturers Association (Formerly: NWWDA - National Wood Window and Door Association) www.wdma.com	(800) 223-2301 (312) 321-6802
WI	Woodwork Institute (Formerly: WIC - Woodwork Institute of California) www.wicnet.org	(916) 372-9943
WMMPA	Wood Moulding & Millwork Producers Association www.wmmpa.com	(800) 550-7889 (530) 661-9591
WSRCA	Western States Roofing Contractors Association www.wsrca.com	(800) 725-0333 (650) 570-5441
WWPA	Western Wood Products Association www.wwpa.org	(503) 224-3930

C. Code Agencies: Where abbreviations and acronyms are used in Specifications or other Contract Documents, they shall mean the recognized name of the entities in the following list. Names, telephone numbers, and Web sites are subject to change and are believed to be accurate and up-to-date as of the date of the Contract Documents.

DIN	Deutsches Institut fur Normung e.V. www.din.de	49 30 2601-0
IAPMO	International Association of Plumbing and Mechanical Officials www.iapmo.org	(909) 472-4100
ICC	International Code Council www.iccsafe.org	(888) 422-7233
ICC-ES	ICC Evaluation Service, Inc. www.icc-es.org	(800) 423-6587 (562) 699-0543

D. Federal Government Agencies: Where abbreviations and acronyms are used in Specifications or other Contract Documents, they shall mean the recognized name of the entities in the following list. Names, telephone numbers, and Web sites are subject to change and are believed to be accurate and up-to-date as of the date of the Contract Documents.

COE	Army Corps of Engineers www.usace.army.mil	(202) 761-0011
CPSC	Consumer Product Safety Commission www.cpsc.gov	(800) 638-2772 (301) 504-7923
DOC	Department of Commerce www.commerce.gov	(202) 482-2000
DOD	Department of Defense http://dodssp.daps.dla.mil	(215) 697-6257
DOE	Department of Energy www.energy.gov	(202) 586-9220
EPA	Environmental Protection Agency www.epa.gov	(202) 272-0167
FAA	Federal Aviation Administration www.faa.gov	(866) 835-5322
FCC	Federal Communications Commission www.fcc.gov	(888) 225-5322
FDA	Food and Drug Administration www.fda.gov	(888) 463-6332
GSA	General Services Administration www.gsa.gov	(800) 488-3111
HUD	Department of Housing and Urban Development	(202) 708-1112

	www.hud.gov	
LBL	Lawrence Berkeley National Laboratory www.lbl.gov	(510) 486-4000
NCHRP	National Cooperative Highway Research Program (See TRB)	
NIST	National Institute of Standards and Technology www.nist.gov	(301) 975-6478
OSHA	Occupational Safety & Health Administration www.osha.gov	(800) 321-6742 (202) 693-1999
PBS	Public Buildings Service (See GSA)	
PHS	Office of Public Health and Science http://www.hhs.gov/ophs/	(202) 690-7694
RUS	Rural Utilities Service (See USDA)	(202) 720-9540
SD	State Department www.state.gov	(202) 647-4000
TRB	Transportation Research Board http://gulliver.trb.org	(202) 334-2934
USDA	Department of Agriculture www.usda.gov	(202) 720-2791
USP	U.S. Pharmacopeia www.usp.org	(800) 227-8772
USPS	Postal Service www.usps.com	(202) 268-2000

E. Standards and Regulations: Where abbreviations and acronyms are used in Specifications or other Contract Documents, they shall mean the recognized name of the standards and regulations in the following list. Names, telephone numbers, and Web sites are subject to change and are believed to be accurate and up-to-date as of the date of the Contract Documents.

ADAAG	Americans with Disabilities Act (ADA)	(800) 872-2253
	Architectural Barriers Act (ABA)	(202) 272-0080
	Accessibility Guidelines for Buildings and Facilities Available from U.S. Access Board www.access-board.gov	

CFR	Code of Federal Regulations	(866) 512-1800
	Available from Government Printing Office	(202) 512-1800
	www.gpoaccess.gov/cfr/index.html	
DOD	Department of Defense Military Specifications and Standards	(215) 697-2664
	Available from Department of Defense Single Stock Point http://dodssp.daps.dla.mil	
DSCC	Defense Supply Center Columbus (See FS)	
FED-STD	Federal Standard (See FS)	
FS	Federal Specification	(215) 697-2664
	Available from Department of Defense Single Stock Point http://dodssp.daps.dla.mil/	
	Available from Defense Standardization Program www.dsp.dla.mil	
	Available from General Services Administration	(202) 619-8925
	www.gsa.gov	
	Available from National Institute of Building Sciences	(202) 289-7800
	www.wbdg.org/ccb	
FTMS	Federal Test Method Standard (See FS)	
MIL	(See MILSPEC)	
MIL-STD	(See MILSPEC)	
MILSPEC	Military Specification and Standards	(215) 697-2664
	Available from Department of Defense Single Stock Point http://dodssp.daps.dla.mil	
UFAS	Uniform Federal Accessibility Standards	(800) 872-2253
	Available from Access Board	(202) 272-0080

www.access-board.gov

F. State Government Agencies: Where abbreviations and acronyms are used in Specifications or other Contract Documents, they shall mean the recognized name of the entities in the following list. Names, telephone numbers, and Web sites are subject to change and are believed to be accurate and up-to-date as of the date of the Contract Documents.

CBHF	State of California, Department of Consumer Affairs Bureau of Home Furnishings and Thermal Insulation www.dca.ca.gov/bhfti	(800) 952-5210 (916) 574-2041
CCR	California Code of Regulations www.calregs.com	(916) 323-6815
CDHS	California Department of Health Services www.dhcs.ca.gov	(916) 445-4171
CDPH	California Department of Public Health, Indoor Air Quality Section www.cal-iaq.org	
CPUC	California Public Utilities Commission www.cpuc.ca.gov	(415) 703-2782
TFS	Texas Forest Service Forest Resource Development http://txforestservice.tamu.edu	(979) 458-6606

PART 2 - PRODUCTS (Not Used)

PART 3 - EXECUTION (Not Used)

END OF SECTION 014200

SECTION 014500 - UNCOVERING AND CORRECTION OF WORK

PART 1 - GENERAL

1.1 RELATED DOCUMENTS

A. Drawings and general provisions of the Contract, including General and Supplementary Conditions and other Division 1 Specification Sections, apply to this Section.

1.2 SUMMARY

A. This section specifies the requirements for uncovering and correction of work.

1.3 UNCOVERING OF WORK

A. If the Contract Documents, laws, ordinances, rules, regulations or orders of any Public Authority having jurisdiction require any portion of the Work to be inspected, the Contractor shall give the Engineer timely notice of its readiness so that the Engineer may observe such inspections.

B. If a portion of the Work is covered contrary to the Engineer's request or to requirements specifically expressed in the Contract Documents, it must, if required in writing by the Engineer, be uncovered for the Engineer's observation and be replaced at the Contractor's expense without change in the Contract Time.

C. If a portion of the Work has been covered which the Engineer has not specifically requested to observe prior to its being covered, the Engineer may request to see such Work and it shall be uncovered by the Contractor.
   1. If such Work is in accordance with Contract Documents, costs of uncovering and replacement shall, by appropriate Change Order, be charged to the Owner.
   2. If such Work is not in accordance with Contract Documents, the Contractor shall pay such costs unless the condition was caused by the Owner or a separate contractor in which event the Owner shall be responsible for payment of such costs.

1.4 CORRECTION OF WORK

A. The Contractor shall promptly correct the Work rejected by the Engineer or failing to conform to the requirements of the Contract Documents, whether observed before or after Substantial Completion and whether or not fabricated, installed or completed.

B.
   1. Costs of correcting such rejected Work, including additional testing, inspections, and compensation for the Engineer's services and expenses made necessary thereby, shall be at the Contractor's expense.

C. The quality of materials and workmanship used in restoring this work shall be in full compliance with the requirements of the Contract Documents.

PART 2 - PRODUCTS (Not Used)

PART 3 - EXECUTION (Not Used)

END OF SECTION 014500

SECTION 015000 - TEMPORARY FACILITIES AND CONTROLS

PART 1 - GENERAL

1.1 SECTION INCLUDES

A. Temporary facilities under Construction Management Agreement.

B. Temporary Utilities:

1. Temporary electricity.
2. Temporary lighting for construction purposes.
3. Temporary heating.
4. Temporary cooling.
5. Temporary ventilation.
6. Communication services.
7. Temporary water service.
8. Temporary sanitary facilities.

C. Construction Facilities:

1. Field offices and sheds.
2. Vehicular access.
3. Parking.
4. Progress cleaning and waste removal.
5. Project identification.
6. Traffic regulation.
7. Fire-prevention facilities.

D. Temporary Controls:

1. Barriers.
2. Enclosures and fencing.
3. Security.
4. Water control.
5. Dust control.
6. Erosion and sediment control.
7. Noise control.
8. Pest and rodent control.
9. Pollution control.

E. Removal of utilities, facilities, and controls.

1.2 TEMPORARY FACILITIES UNDER CONSTRUCTION MANAGEMENT AGREEMENT

A. Temporary Provisions Provided by Construction Manager:

1. Temporary barriers, barricades, covered walkways, fencing, exterior closures, and interior closures.
2. Temporary field offices.
3. Cleaning during construction.
4. Access roads and approaches.
5. Temporary elevator.
6. Temporary sanitary facilities.
7. Temporary heating and ventilating after enclosure.
8. Temporary electrical service and distribution system for power and lighting.
9. Temporary telephone and internet service.

B. Each Contractor: Coordinate provisions with Construction Manager and provide the following items as necessary for execution of the Work including associated costs:

1. Construction aids.
2. Temporary fire protection, dust control, erosion and sediment control, water control, noise control, and other necessary temporary controls.
3. Temporary barriers, barricades, and similar devices as necessary for safety and protection of construction personnel and public.
4. On Construction Manager's approval, may provide temporary field office including electrical service and temporary telephone.
5. Temporary tree and plant protection.
6. Temporary heating before building enclosure.
7. Electrical service required in addition to temporary service and distribution provided by Construction Manager.
8. Temporary provisions for protection of installed Work.

1.3 TEMPORARY ELECTRICITY

A. Provide and pay for power service required from source as needed for construction operation.

B. Do not disrupt Owner's use of service.

C. Permanent convenience receptacles may be used during construction.

1.4 TEMPORARY LIGHTING FOR CONSTRUCTION PURPOSES

A. Provide and maintain lighting for construction operations.

1.5 TEMPORARY HEATING

A. Provide and pay for heating devices and heat as needed to maintain specified conditions for construction operations.

1.6 TEMPORARY COOLING

A. Provide and pay for cooling devices and cooling as needed to maintain specified conditions for construction operations.

1.7 COMMUNICATION SERVICES

A. Telephone Service: Provide, maintain, and pay for telephone service to field office at time of Project mobilization and until completion of Work.

B. Facsimile Service: Provide, maintain, and pay for facsimile service including dedicated telephone line to field office at time of Project mobilization and until completion of Work.

C. Internet Service: Provide, maintain, and pay for broadband Internet service to field office at time of Project mobilization. Provide desktop computer with Microsoft operating system and appropriate office function software, modem, and printer.

1.8 TEMPORARY WATER SERVICE

A. Provide and pay for suitable quality water service as needed to maintain specified conditions for construction operations.

1.9 TEMPORARY SANITARY FACILITIES

A. Provide and maintain required facilities and enclosures. Existing facility use is not permitted. Provide facilities at time of Project mobilization.

1.10 FIELD OFFICES AND SHEDS

Resident Project Representative (RPR) Field Office: 12’ x 40’ Weathertight, with two offices, bathroom, lighting, electrical outlets, heating, cooling and ventilating equipment, and equipped with sturdy furniture including conference table, [drawing rack,] filing cabinets, two (2) 8’ tables and drawing display table.

A. Provide space for Project meetings in RPR Field Office, with table and chairs to accommodate ten (10) persons.

1.11 VEHICULAR ACCESS

A. Locate as indicated on Drawings approved by Engineer and approved by Owner.

1.12 PARKING

A. Provide temporary gravel surface parking areas to accommodate construction personnel.

B. Locate as indicated on Drawings approved by Engineer and approved by Owner.

C. Maintenance:

1. Maintain traffic and parking areas in sound condition free of excavated material, construction equipment, products, mud, snow, ice, and the like.
2. Maintain existing and permanent paved areas used for construction; promptly repair breaks, potholes, low areas, standing water, and other deficiencies, to maintain paving and drainage in original condition.

D. Removal, Repair:

1. Remove temporary materials and construction before Substantial Completion.
2. Repair existing facilities damaged by use, to original condition.

1.13 PROGRESS CLEANING AND WASTE REMOVAL

A. Maintain areas free of waste materials, debris, and rubbish. Maintain Site in clean and orderly condition.

B. Remove debris and rubbish from pipe chases, plenums, attics, crawl spaces, and other closed or remote spaces, before enclosing spaces.

C. Broom and vacuum clean interior areas before starting surface finishing, and continue cleaning to eliminate dust.

D. Collect and remove waste materials, debris, and rubbish from Site weekly and dispose of off-Site.

1.14 PROJECT IDENTIFICATION

A. Project Identification Sign:

1. One painted sign of construction, design, and content shown on Drawings, location designated.
2. Content:

a. Project [number,] title, [logo,] and name of Owner.
b. Names and titles of authorities.
c. Names and titles of Engineer.
d. Name of Prime Contractor.

3. Graphic Design, Colors, and Style of Lettering: Designated by Engineer.

B. Removal: Remove signs, framing, supports, and foundations at completion of Project and restore area.

1.15 TRAFFIC REGULATION

A. Signs, Signals, and Devices:

1. Post-Mounted and Wall-Mounted Traffic Control and Informational Signs: As approved by authorities having jurisdiction.
2. Traffic Control Signals: As approved by local jurisdictions.
3. Traffic Cones, Drums, Flares, and Lights: As approved by authorities having jurisdiction.
4. Flag Person Equipment: As required by authorities having jurisdiction.

B. Flag Persons: Provide trained and equipped flag persons to regulate traffic when construction operations or traffic encroach on public traffic lanes.

C. Flares and Lights: Use flares and lights during hours of low visibility to delineate traffic lanes and to guide traffic.

D. Haul Routes:

1. Consult with authorities having jurisdiction and establish public thoroughfares to be used for haul routes and Site access.
2. Confine construction traffic to designated haul routes.
3. Provide traffic control at critical areas of haul routes to regulate traffic and to minimize interference with public traffic.

E. Traffic Signs and Signals:

1. Provide signs at approaches to Site and on Site, at crossroads, detours, parking areas, and elsewhere as needed to direct construction and affected public traffic.
2. Provide, operate, and maintain traffic control signals to direct and maintain orderly flow of traffic in areas under Contractor's control and areas affected by Contractor's operations.
3. Relocate signs and signals as Work progresses, to maintain effective traffic control.

F. Removal:

1. Remove equipment and devices at Substantial Completion.
2. Repair damage caused by installation.
3. Remove post settings to depth of (2) feet.

1.16 FIRE-PREVENTION FACILITIES

A. Prohibit smoking within buildings. Designate area on Site where smoking is permitted. Provide approved ashtrays in designated smoking areas.

B. Establish fire watch for cutting, welding, and other hazardous operations capable of starting fires. Maintain fire watch before, during, and after hazardous operations until threat of fire does not exist.

C. Portable Fire Extinguishers: NFPA 10; 10-pound capacity, 4A-60B: C UL rating.

1. Provide one fire extinguisher at each stairway on each floor of buildings under construction.
2. Provide minimum of one fire extinguisher in every construction trailer and storage shed.
3. Provide minimum of one fire extinguisher on roof during roofing operations using heat-producing equipment.

1.17 BARRIERS

A. Provide barriers to prevent unauthorized entry to construction areas to allow for Owner's use of Site, and to protect existing facilities and adjacent properties from damage from construction operations.

1.18 ENCLOSURES AND FENCING

A. Construction: Commercial-grade chain-link fence

B. Provide 6 foot high fence around construction Site; equip with vehicular and pedestrian gates with locks.

1.19 SECURITY

A. Security Program:

1. Protect Work on existing premises from theft, vandalism, and unauthorized entry.

1.20 WATER CONTROL

A. Grade Site to drain. Maintain excavations free of water. Provide, operate, and maintain necessary pumping equipment.

B. Protect Site from puddles or running water. Provide water barriers as required to protect Site from soil erosion.

1.21 DUST CONTROL

A. Execute Work by methods that minimize raising dust from construction operations.

B. Provide positive means to prevent airborne dust from dispersing into atmosphere.

1.22 EROSION AND SEDIMENT CONTROL

A. Plan and execute construction by methods to control surface drainage from cuts and fills from borrow and waste disposal areas. Prevent erosion and sedimentation.

B. Provide temporary measures including berms, dikes, drains, and other devices to prevent water flow.

1.23 NOISE CONTROL

A. Provide methods, means, and facilities to minimize noise from and noise produced by construction operations.

1.24 PEST AND RODENT CONTROL

A. N/A

1.25 POLLUTION CONTROL

A. Provide methods, means, and facilities to prevent contamination of soil, water, and atmosphere from discharge of noxious, toxic substances and pollutants produced by construction operations.

B. Comply with pollution and environmental control requirements of EPA and ADEM

1.26 REMOVAL OF UTILITIES, FACILITIES, AND CONTROLS

A. Remove temporary utilities, equipment, facilities, and materials before final inspection.

B. Clean and repair damage caused by installation or use of temporary Work.

C. Restore existing and permanent facilities used during construction to original condition. Restore permanent facilities used during construction to specified condition.

PART 2 - PRODUCTS - Not Used

PART 3 - EXECUTION - Not Used

END OF SECTION 015000

This page intentionally left blank.

SECTION 016000 - PRODUCT REQUIREMENTS

PART 1 - GENERAL

1.1 SECTION INCLUDES

A. Products.

B. Product delivery requirements.

C. Product storage and handling requirements.

D. Product options.

1.2 PRODUCTS

A. At minimum, comply with specified requirements and reference standards.

B. Specified products define standard of quality, type, function, dimension, appearance, and performance required.

C. Furnish products of qualified manufacturers that are suitable for intended use. Furnish products of each type by single manufacturer unless specified otherwise. Confirm that manufacturer's production capacity can provide sufficient product, on time, to meet Project requirements.

D. Do not use materials and equipment removed from existing premises except as specifically permitted by Contract Documents.

E. Furnish interchangeable components from same manufacturer for components being replaced.

1.3 PRODUCT DELIVERY REQUIREMENTS

A. Comply with delivery requirements in Section 017419 - Construction Waste Management and Disposal.

B. Transport and handle products according to manufacturer's instructions.

C. Promptly inspect shipments to ensure products comply with requirements, quantities are correct, and products are undamaged.

D. Provide equipment and personnel to handle products; use methods to prevent soiling, disfigurement, or damage.

1.4 PRODUCT STORAGE AND HANDLING REQUIREMENTS

A. Store and protect products according to manufacturer's instructions.

B. Store products with seals and labels intact and legible.

C. Store sensitive products in weathertight, climate-controlled enclosures in an environment suitable to product.

D. For exterior storage of fabricated products, place products on sloped supports aboveground.

E. Provide off-Site storage and protection when Site does not permit on-Site storage or protection.

F. Cover products subject to deterioration with impervious sheet covering. Provide ventilation to prevent condensation and degradation of products.

G. Store loose granular materials on solid flat surfaces in well-drained area. Prevent mixing with foreign matter.

H. Provide equipment and personnel to store products; use methods to prevent soiling, disfigurement, or damage.

1.5 PRODUCT OPTIONS

A. Products Specified by Reference Standards or by Description Only: Products complying with specified reference standards or description.

B. Products Specified by Naming One or More Manufacturers: Products of one of manufacturers named and complying with Specifications; no options or substitutions allowed.

C. Products Specified by Naming One or More Manufacturers with Provision for Substitutions: Submit Request for Substitution for any manufacturer not named, according to Section 012500 - Substitution Procedures.

PART 2 - PRODUCTS - Not Used

PART 3 - EXECUTION - Not Used

END OF SECTION 016000

SECTION 017000 - EXECUTION AND CLOSEOUT REQUIREMENTS

PART 1 - GENERAL

1.1 SECTION INCLUDES

A. Field engineering.

B. Closeout procedures.

C. Starting of systems.

D. Demonstration and instructions.

E. Testing, adjusting, and balancing.

F. Project record documents.

G. Operation and maintenance data.

H. Manual for materials and finishes.

I. Manual for equipment and systems.

J. Spare parts and maintenance products.

K. Product warranties and product bonds.

L. Examination.

M. Preparation.

N. Execution.

O. Cutting and patching.

P. Protecting installed construction.

Q. Final cleaning.

1.2 FIELD ENGINEERING

A. Employ land surveyor registered in State of Georgia and acceptable to Engineer.

B. Locate all and protect survey control and reference points. Promptly notify Engineer of discrepancies discovered.

C. Control datum for survey is established on the drawings.

D. Prior to beginning Work, verify and establish floor elevations of existing facilities to ensure that new Work will meet existing elevations in smooth and level alignment except where specifically detailed or indicated otherwise.

E. Verify setbacks and easements; confirm Drawing dimensions and elevations.

F. Provide field engineering services. Establish elevations, lines, and levels using recognized engineering survey practices.

G. Submit copy of certificate signed by land surveyor certifying elevations and locations of the Work are in conformance with Contract Documents.

H. On completion of foundation walls and major Site improvements, prepare certified survey illustrating dimensions, locations, angles, and elevations of construction.

I. Protect survey control points prior to starting Site Work; preserve permanent reference points during construction.

J. Replace dislocated survey control points based on original survey control. Make no changes without prior written notice to Architect/Engineer.

K. Final Property Survey: Prior to Substantial Completion, prepare final property survey illustrating locations, dimensions, angles, and elevations of buildings and Site Work that have resulted from construction indicating their relationship to permanent bench marks and property lines.

1. Show significant features (real property) for Project.
2. Include certification on survey, signed by surveyor, that principal metes, bounds, lines, levels, and elevations of Project are accurately shown.

1.3 CLOSEOUT PROCEDURES

A. Prerequisites to Substantial Completion: Complete following items before requesting Certification of Substantial Completion, either for entire Work or for portions of Work:

1. Submit maintenance manuals, Project record documents, digital images of construction photographs**,** and other similar final record data in compliance with this Section.
2. Complete facility startup, testing, adjusting, balancing of systems and equipment, demonstrations, and instructions to Owner's operating and maintenance personnel as specified in compliance with this Section.
3. Conduct inspection to establish basis for request that Work is substantially complete. Create comprehensive list (initial punch list) indicating items to be completed or corrected, value of incomplete or nonconforming Work, reason for being incomplete, and date of anticipated completion for each item. Include copy of list with request for Certificate of Substantial Completion.
4. Obtain and submit releases enabling Owner's full, unrestricted use of Project and access to services and utilities. Include certificate of occupancy, operating certificates, and similar releases from authorities having jurisdiction and utility companies.
5. Deliver tools, spare parts, extra stocks of material, and similar physical items to Owner.

6. Make final change-over of locks and transmit keys directly to Owner. Advise Owner's personnel of change-over in security provisions.
7. Discontinue or change over and remove temporary facilities and services from Project Site, along with construction tools, mockups, and similar elements.
8. Perform final cleaning according to this Section.

B. Substantial Completion Inspection:

1. When Contractor considers Work to be substantially complete, submit to Engineer:

   a. Written certificate that Work, or designated portion, is substantially complete.
   b. List of items to be completed or corrected (initial punch list).

2. Within 7 days after receipt of request for Substantial Completion, Engineer and Owner will make inspection to determine whether Work or designated portion is substantially complete.
3. Should Engineer determine that Work is not substantially complete:

   a. Engineer will promptly notify Contractor in writing, stating reasons for its opinion.
   b. Contractor shall remedy deficiencies in Work and send second written request for Substantial Completion to Engineer.
   c. Engineer will reinspect Work.
   d. Redo and Inspection of Deficient Work: Repeated until Work passes Engineer / Owners inspection.

4. When Engineer and Owner finds that Work is substantially complete, Engineer will:

   a. Prepare Certificate of Substantial Completion accompanied by Contractor's list of items to be completed or corrected as verified and amended by Engineer and Owner (final punch list).
   b. Submit Certificate to Owner and Contractor for their written acceptance of responsibilities assigned to them in Certificate.

5. After Work is substantially complete, Contractor shall:

   a. Allow Owner occupancy of Project under provisions stated in Certificate of Substantial Completion.
   b. Complete Work listed for completion or correction within time period stipulated.

C. Prerequisites for Final Completion: Complete following items before requesting final acceptance and final payment.

1. When Contractor considers Work to be complete, submit written certification that:

   a. Contract Documents have been reviewed.
   b. Work has been examined for compliance with Contract Documents.
   c. Work has been completed according to Contract Documents.
   d. Work is completed and ready for final inspection.

2. Submittals: Submit following:

a. Final punch list indicating all items have been completed or corrected.
b. Final payment request with final releases and supporting documentation not previously submitted and accepted. Include certificates of insurance for products and completed operations where required.
c. Specified warranties, workmanship/maintenance bonds, maintenance agreements, and other similar documents.
d. Accounting statement for final changes to Contract Sum.
e. Contractor's affidavit of payment of debts and claims.
f. Contractor affidavit of release of liens.
g. Consent of surety to final payment.

3. Perform final cleaning for Contractor-soiled areas according to this Section.

D. Final Completion Inspection:

1. Within 7 days after receipt of request for final inspection, Engineer and Owner will make inspection to determine whether Work or designated portion is complete.
2. Should Engineer consider Work to be incomplete or defective:

a. Engineer will promptly notify Contractor in writing, listing incomplete or defective Work.
b. Contractor shall remedy stated deficiencies and send second written request to Engineer that Work is complete.
c. Engineer will reinspect Work.
d. Redo and Inspection of Deficient Work: Repeated until Work passes Engineer and Owner inspection.

1.4 STARTING OF SYSTEMS

A. Coordinate schedule for startup of various equipment and systems.

B. Notify Engineer 7 days prior to startup of each item.

C. Verify that each piece of equipment or system has been checked for proper lubrication, drive rotation, belt tension, control sequence, and for conditions which may cause damage.

D. Verify that tests, meter readings, and electrical characteristics agree with those required by equipment or system manufacturer.

E. Verify that wiring and support components for equipment are complete and tested.

F. Execute startup under supervision of manufacturer's representative or Contractors' personnel according to manufacturer's instructions.

G. When specified in individual Specification Sections, require manufacturer to provide authorized representative who will be present at Site to inspect, check, and approve equipment or system installation prior to startup and will supervise placing equipment or system in operation.

H. Submit a written report that equipment or system has been properly installed and is functioning correctly.

1.5 DEMONSTRATION AND INSTRUCTIONS

A. Demonstrate operation and maintenance of products to Owner's personnel 14 Days prior to date of Substantial Completion.

B. Demonstrate Project equipment and instructed by manufacturer's representative who is knowledgeable about the Project.

C. Video Recordings: Provide high-quality color video recordings of demonstration and instructional sessions. Engage commercial videographer to record sessions. Include classroom instructions, demonstrations, board diagrams, and other visual aids. Include menu navigation.

D. For equipment or systems requiring seasonal operation, perform demonstration for other season within 6 months.

E. Use operation and maintenance manuals as basis for instruction. Review contents of manual with Owner's personnel in detail to explain all aspects of operation and maintenance.

F. Demonstrate startup, operation, control, adjustment, troubleshooting, servicing, maintenance, and shutdown of each item of equipment at scheduled time at equipment location.

G. Prepare and insert additional data in operations and maintenance manuals when need for additional data becomes apparent during instruction.

1.6 TESTING, ADJUSTING, AND BALANCING

A. Owner will appoint, employ, and pay for services of independent firm to perform testing, adjusting, and balancing after initial contractor start up and adjustments.

1.7 PROJECT RECORD DOCUMENTS

A. Maintain on Site one set of the following record documents; record actual revisions to the Work:

1. Drawings.
2. Specifications.
3. Addenda.
4. Change Orders and other modifications to the Contract.
5. Reviewed Shop Drawings, product data, and Samples.
6. Manufacturer's instruction for assembly, installation, and adjusting.

B. Ensure entries are complete and accurate, enabling future reference by Owner.

C. Store record documents separate from documents used for construction.

D. Record information concurrent with construction progress, not less than weekly.

E. Specifications: Legibly mark and record, at each product Section, description of actual products installed, including the following:

1. Manufacturer's name and product model and number.
2. Product substitutions or alternates used.
3. Changes made by Addenda and modifications.

F. Record Drawings Legibly mark each item to record actual construction as follows:

1. Include Contract modifications such as Addenda, supplementary instructions, change directives, field orders, minor changes in the Work, and change orders.
2. Include locations of concealed elements of the Work.
3. Identify depth of buried utility lines and provide dimensions showing distances from permanent facility components that are parallel to utilities.
4. Dimension ends, corners, and junctions of buried utilities to permanent facility components using triangulation.
5. Identify and locate existing buried or concealed items encountered during Project.
6. Measured depths of foundations in relation to finish main floor datum.
7. Measured horizontal and vertical locations of underground utilities and appurtenances, referenced to permanent surface improvements.
8. Measured locations of internal utilities and appurtenances concealed in construction, referenced to visible and accessible features of the Work.
9. Field changes of dimension and detail.
10. Details not on original Drawings.

G. Submit marked-up paper copy documents to Engineer before Substantial Completion.

H. Submit PDF electronic files of marked-up documents to Architect/Engineer before Substantial Completion.

1.8 OPERATION AND MAINTENANCE DATA

A. Submit in PDF composite electronic indexed file.

B. Submit 3 data bound in 8-1/2 x 11-inch (A4) text pages, three D side ring binders with durable plastic covers.

C. Prepare binder cover with printed title "OPERATION AND MAINTENANCE INSTRUCTIONS," title of Project, and subject matter of binder when multiple binders are required.

D. Internally subdivide binder contents with permanent page dividers, logically organized as described below; with tab titling clearly printed under reinforced laminated plastic tabs.

E. Drawings: Provide with reinforced punched binder tab. Bind in with text; fold larger drawings to size of text pages.

F. Contents: Prepare table of contents for each volume, with each product or system description identified, typed on white paper, in three parts as follows:

1. Part 1: Directory, listing names, addresses, and telephone numbers of Architect/Engineer, Contractor, Subcontractors, and major equipment suppliers.

2. Part 2: Operation and maintenance instructions, arranged by system and subdivided by specification section. For each category, identify names, addresses, and telephone numbers of Subcontractors and suppliers. Include the following:

    a. Significant design criteria.
    b. List of equipment.
    c. Parts list for each component.
    d. Operating instructions.
    e. Maintenance instructions for equipment and systems.
    f. Maintenance instructions for special finishes, including recommended cleaning methods and materials, and special precautions identifying detrimental agents.
    g. Safety precautions to be taken when operating and maintaining or working near equipment.

3. Part 3: Project documents and certificates, including the following:

    a. Shop Drawings and product data.
    b. Air and water balance reports.
    c. Certificates.
    d. Originals of warranties.

1.9 MANUAL FOR MATERIALS AND FINISHES

A. Submit two copies of preliminary draft or proposed formats and outlines of contents before start of Work. Architect/Engineer will review draft and return one copy with comments.

B. For equipment or component parts of equipment put into service during construction and operated by Owner, submit documents within ten days after acceptance.

C. Submit one copy of completed volumes before Substantial Completion. Draft copy be reviewed and returned, with Architect/Engineer comments. Revise content of document sets as required prior to final submission.

D. Submit 2 sets of revised final volumes within 10 days after final inspection.

E. Submit in PDF composite electronic indexed file of final manual within 10 days after final inspection.

F. Building Products, Applied Materials, and Finishes: Include product data, with catalog number, size, composition, and color and texture designations. Include information for re-ordering custom-manufactured products**.**

G. Instructions for Care and Maintenance: Include manufacturer's recommendations for cleaning agents and methods, precautions against detrimental agents and methods, and recommended schedule for cleaning and maintenance.

H. Moisture Protection and Weather Exposed Products: Include product data listing applicable reference standards, chemical composition, and details of installation. Include recommendations for inspections, maintenance, and repair.

I. Additional Requirements: As specified in individual product Specification Sections.

J. Include listing in table of contents for design data, with tabbed fly sheet and space for insertion of data.

1.10 MANUAL FOR EQUIPMENT AND SYSTEMS

A. Submit two copies of preliminary draft or proposed formats and outlines of contents before start of Work. Architect/Engineer will review draft and return one copy with comments.

B. For equipment, or component parts of equipment put into service during construction and operated by Owner, submit documents within ten days after acceptance.

C. Submit one copy of completed volumes before Substantial Completion. Draft copy will be reviewed and returned, with Engineer comments. Revise content of document sets as required prior to final submission.

D. Submit 2 sets of revised final volumes within 10 days after final inspection.

E. Submit in PDF composite electronic indexed file of final manual within 10 days after final inspection.

F. Each Item of Equipment and Each System: Include description of unit or system and component parts. Identify function, normal operating characteristics, and limiting conditions. Include performance curves, with engineering data and tests, and complete nomenclature and model number of replaceable parts.

G. Panelboard Circuit Directories: Provide electrical service characteristics, controls, and communications; typed by label machine.

H. Include color-coded wiring diagrams as installed.

I. Operating Procedures: Include startup, break-in, and routine normal operating instructions and sequences. Include regulation, control, stopping, shutdown, and emergency instructions. Include summer, winter, and special operating instructions.

J. Maintenance Requirements: Include routine procedures and guide for preventative maintenance and troubleshooting; disassembly, repair, and reassembly instructions; and alignment, adjusting, balancing, and checking instructions.

K. Include servicing and lubrication schedule and list of lubricants required.

L. Include manufacturer's printed operation and maintenance instructions.

M. Include sequence of operation by controls manufacturer.

N. Include original manufacturer's parts list, illustrations, assembly drawings, and diagrams required for maintenance.

O. Include control diagrams by controls manufacturer as installed.

P. Include Contractor's coordination drawings with color-coded piping diagrams as installed.

Q. Include charts of valve tag numbers, with location and function of each valve, keyed to flow and control diagrams.

R. Include list of original manufacturer's spare parts, current prices, and recommended quantities to be maintained in storage.

S. Include test and balancing reports.

T. Additional Requirements: As specified in individual product Specification Sections.

U. Include listing in table of contents for design data with tabbed dividers and space for insertion of data.

1.11 SPARE PARTS AND MAINTENANCE PRODUCTS

A. Furnish spare parts, maintenance, and extra products in quantities specified in individual Specification Sections.

B. Deliver to Project Site; obtain receipt prior to final payment.

1.12 PRODUCT WARRANTIES AND PRODUCT BONDS

A. Obtain warranties and bonds executed in duplicate by responsible Subcontractors, suppliers, and manufacturers within 10 days after completion of applicable item of Work.

B. Execute and assemble transferable warranty documents and bonds from Subcontractors, suppliers, and manufacturers.

C. Verify documents are in proper form, contain full information, and are notarized.

D. Co-execute submittals when required.

E. Include table of contents and assemble in three D side ring binder with durable plastic cover.

F. Submit prior to final Application for Payment.

G. Time of Submittals:

1. For equipment or component parts of equipment put into service during construction with Owner's permission, submit documents within 10 days after acceptance.
2. Make other submittals within 10 days after date of Substantial Completion, prior to final Application for Payment.
3. For items of Work for which acceptance is delayed beyond Substantial Completion, submit within 10 days after acceptance, listing date of acceptance as beginning of warranty or bond period.

PART 2 - PRODUCTS - Not Used

PART 3 - EXECUTION

3.1 EXAMINATION

A. Verify that existing Site conditions and substrate surfaces are acceptable for subsequent Work. Beginning new Work means acceptance of existing conditions.

B. Verify that existing substrate is capable of structural support or attachment of new Work being applied or attached.

C. Examine and verify specific conditions described in individual Specification Sections.

D. Verify that utility services are available with correct characteristics and in correct locations.

3.2 PREPARATION

A. Clean substrate surfaces prior to applying next material or substance according to manufacturer's instructions.

B. Seal cracks or openings of substrate prior to applying next material or substance.

C. Apply manufacturer-required or -recommended substrate primer, sealer, or conditioner prior to applying new material or substance in contact or bond.

3.3 EXECUTION

A. Comply with manufacturer's installation instructions, performing each step in sequence. Maintain one set of manufacturer's installation instructions at Project Site during installation and until completion of construction.

B. When manufacturer's installation instructions conflict with Contract Documents, request clarification from Architect/Engineer before proceeding.

C. Verify that field measurements are as indicated on approved Shop Drawings or as instructed by manufacturer.

D. Secure products in place with positive anchorage devices designed and sized to withstand stresses, vibration, physical distortion, or disfigurement.

1. Secure Work true to line and level and within specified tolerances, or if not specified, industry-recognized tolerances.
2. Physically separate products in place, provide electrical insulation, or provide protective coatings to prevent galvanic action or corrosion between dissimilar metals.
3. Exposed Joints: Provide uniform joint width and arrange to obtain best visual effect. Refer questionable visual-effect choices to Architect/Engineer for final decision.

E. Allow for expansion of materials and building movement.

F. Climatic Conditions and Project Status: Install each unit of Work under conditions to ensure best possible results in coordination with entire Project.

1. Isolate each unit of Work from incompatible Work as necessary to prevent deterioration.
2. Coordinate enclosure of Work with required inspections and tests to minimize necessity of uncovering Work for those purposes.

G. Mounting Heights: Where not indicated, mount individual units of Work at industry recognized standard mounting heights for particular application indicated.

1. Refer questionable mounting heights choices to Architect/Engineer for final decision.
2. Elements Identified as Accessible to Handicapped: Comply with applicable codes and regulations.

H. Adjust operating products and equipment to ensure smooth and unhindered operation.

I. Clean and perform maintenance on installed Work as frequently as necessary through remainder of construction period. Lubricate operable components as recommended by manufacturer.

3.4 CUTTING AND PATCHING

A. Employ skilled installers to perform cutting and patching.

B. Submit written request in advance of cutting or altering elements affecting:

1. Structural integrity of element.
2. Integrity of weather-exposed or moisture-resistant elements.
3. Efficiency, maintenance, or safety of element.
4. Visual qualities of sight-exposed elements.
5. Work of Owner or separate contractor.

C. Execute cutting, fitting, and patching to complete Work and to:

1. Fit the several parts together, to integrate with other Work.
2. Uncover Work to install or correct ill-timed Work.
3. Remove and replace defective and nonconforming Work.
4. Remove samples of installed Work for testing.
5. Provide openings in elements of Work for penetrations of mechanical and electrical Work.

D. Execute Work by methods to avoid damage to other Work and to provide proper surfaces to receive patching and finishing.

E. Cut masonry and concrete materials using masonry saw or core drill.

F. Restore Work with new products according to requirements of Contract Documents.

G. Fit Work tight to pipes, sleeves, ducts, conduits, and other penetrations through surfaces.

H. Maintain integrity of wall, ceiling, or floor construction; completely seal voids.

I. At penetrations of fire-rated walls, partitions, ceiling, or floor construction, completely seal voids with fire rated material to full thickness of penetrated element.

J. Refinish surfaces to match adjacent finishes. For continuous surfaces, refinish to nearest intersection; for assembly, refinish entire unit.

K. Identify hazardous substances or conditions exposed during the Work to Architect/Engineer for decision or remedy.

3.5 PROTECTING INSTALLED CONSTRUCTION

A. Protect installed Work and provide special protection where specified in individual Specification Sections.

B. Provide temporary and removable protection for installed products. Control activity in immediate Work area to prevent damage.

C. Provide protective coverings at walls, projections, jambs, sills, and soffits of openings.

D. Use durable sheet materials to protect finished floors, stairs, and other surfaces from traffic, dirt, wear, damage, or movement of heavy objects.

E. Prohibit traffic or storage upon waterproofed or roofed surfaces. When traffic or activity is necessary, obtain recommendations for protection from waterproofing or roofing material manufacturer.

F. Prohibit traffic from landscaped areas.

3.6 FINAL CLEANING

A. Execute final cleaning prior to final Project assessment. Employ

1. Employ experienced personnel or professional cleaning firm.

B. Clean interior and exterior glass and surfaces exposed to view; remove temporary labels, stains, and foreign substances; polish transparent and glossy surfaces**;** and vacuum carpeted and soft surfaces.

C. Clean equipment and fixtures to sanitary condition with appropriate cleaning materials.

D. Replace filters of operating equipment.

E. Clean debris from roofs, gutters, downspouts, and drainage systems.

F. Clean Site; sweep paved areas, rake clean landscaped surfaces.

G. Remove waste and surplus materials, rubbish, and construction facilities from Site.

END OF SECTION 017000

This page intentionally left blank.

SECTION 017310 – CUTTING AND PATCHING

PART 1 - GENERAL

1.1 RELATED DOCUMENTS

A. Drawings and general provisions of the Contract, including General and Supplementary Conditions and other Division 1 Specification Sections, apply to this Section.

1.2 SUMMARY

A. This Section includes procedural requirements for cutting and patching.

B. Related Sections include the following:
   1. Division 1 Section "Selective Demolition" for demolition of selected portions of the alterations.
   2. Divisions 2 through 16 Sections for specific requirements and limitations applicable to cutting and patching individual parts of the Work.

1.3 DEFINITIONS

A. Cutting: Removal of existing construction necessary to permit installation or performance of other Work.

B. Patching: Fitting and repair work required to restore surfaces to original conditions after installation of other Work.

1.4 QUALITY ASSURANCE

A. Structural Elements: Do not cut and patch structural elements in a manner that could change their load-carrying capacity or load-deflection ratio.

B. Visual Requirements: Do not cut and patch construction in a manner that results in visual evidence of cutting and patching. Remove and replace construction that has been cut and patched in a visually unsatisfactory manner.

PART 2 - PRODUCTS

2.1 MATERIALS

A. General: Comply with requirements specified in other Sections of these Specifications.

B. Existing Materials: Use materials identical to existing materials. For exposed surfaces, use materials that visually match existing adjacent surfaces to the fullest extent possible.
   1. If identical materials are unavailable or cannot be used, use materials that, when installed, will match the visual and functional performance of existing materials.

PART 3 - EXECUTION

3.1 EXAMINATION

A. Examine surfaces to be cut and patched and conditions under which cutting and patching are to be performed.
   1. Compatibility: Before patching, verify compatibility with and suitability of substrates, including compatibility with existing finishes or primers.
   2. Proceed with installation only after unsafe or unsatisfactory conditions have been corrected.

3.2 PREPARATION

A. Temporary Support: Provide temporary support of Work to be cut.

B. Protection: Protect existing construction during cutting and patching to prevent damage. Provide protection from adverse weather conditions for portions of Project that might be exposed during cutting and patching operations.

C. Adjoining Areas: Avoid interference with use of adjoining areas or interruption of free passage to adjoining areas.

3.3 PERFORMANCE

A. General: Employ skilled workers to perform cutting and patching. Proceed with cutting and patching at the earliest feasible time, and complete without delay.
   1. Cut existing construction to provide for installation of other components or performance of other construction, and subsequently patch as required to restore surfaces to their original condition.

B. Cutting: Cut existing construction by sawing, drilling, breaking, chipping, grinding, and similar operations, including excavation, using methods least likely to damage elements retained or adjoining construction. If possible, review proposed procedures with original Installer; comply with original Installer's written recommendations.
   1. In general, use hand or small power tools designed for sawing and grinding, not hammering and chopping. Cut holes and slots as small as possible, neatly to size required, and with minimum disturbance of adjacent surfaces. Temporarily cover openings when not in use.
   2. Existing Finished Surfaces: Cut or drill from the exposed or finished side into concealed surfaces.
   3. Concrete or Asphalt: Cut using a cutting machine, such as an abrasive saw or a diamond-core drill.
   4. Excavating and Backfilling: Comply with requirements in applicable Division 2 Sections where required by cutting and patching operations.
   5. Mechanical and Electrical Services: Cut off pipe or conduit in walls or partitions to be removed. Cap, valve, or plug and seal remaining portion of pipe or conduit to prevent entrance of moisture or other foreign matter after cutting.
   6. Proceed with patching after construction operations requiring cutting are complete.

C. Patching: Patch construction by filling, repairing, refinishing, closing up, and similar operations following performance of other Work. Patch with durable seams that are as invisible as

possible. Provide materials and comply with installation requirements specified in other Sections of these Specifications.

1. Inspection: Where feasible, test and inspect patched areas after completion to demonstrate integrity of installation.
2. Exposed Finishes: Restore exposed finishes of patched areas and extend finish restoration into retained adjoining construction in a manner that will eliminate evidence of patching and refinishing.
3. Exterior Enclosure: Patch components in a manner that restores enclosure to a weathertight condition.

END OF SECTION 017310

This page intentionally left blank.

SECTION 017320 – SELECTIVE DEMOLITION

PART 1 - GENERAL

1.1 RELATED DOCUMENTS

A. Drawings and general provisions of the Contract, including General and Supplementary Conditions and Division 01 Specification Sections, apply to this Section.

1.2 SUMMARY

A. Section Includes:

1. Demolition and removal of selected portions of building or structure.
2. Demolition and removal of selected site elements.
3. Salvage of existing items to be reused or recycled.

B. Related Requirements:

1. Section 011000 "Summary" for restrictions on the use of the premises, Owner-occupancy requirements, and phasing requirements.
2. Section 017000 "Execution and Closeout Requirements" for cutting and patching procedures.
3. Section 311000 "Site Clearing" for site clearing and removal of above- and below-grade improvements.

1.3 DEFINITIONS

A. Remove: Detach items from existing construction and legally dispose of them off-site unless indicated to be removed and salvaged or removed and reinstalled.

B. Remove and Salvage: Carefully detach from existing construction, in a manner to prevent damage, and deliver to Owner.

C. Remove and Reinstall: Detach items from existing construction, prepare for reuse, and reinstall where indicated.

D. Existing to Remain: Existing items of construction that are not to be permanently removed and that are not otherwise indicated to be removed, removed and salvaged, or removed and reinstalled.

1.4 MATERIALS OWNERSHIP

A. Unless otherwise indicated, demolition waste becomes property of Contractor.

B. Historic items, relics, antiques, and similar objects including, but not limited to, cornerstones and their contents, commemorative plaques and tablets, and other items of interest or value to Owner that may be uncovered during demolition remain the property of Owner.

1. Carefully salvage in a manner to prevent damage and promptly return to Owner.

1.5 PREINSTALLATION MEETINGS

A. Predemolition Conference: Conduct conference at Project site.

1. Inspect and discuss condition of construction to be selectively demolished.
2. Review structural load limitations of existing structure.
3. Review and finalize selective demolition schedule and verify availability of materials, demolition personnel, equipment, and facilities needed to make progress and avoid delays.
4. Review requirements of work performed by other trades that rely on substrates exposed by selective demolition operations.
5. Review areas where existing construction is to remain and requires protection.

1.6 INFORMATIONAL SUBMITTALS

A. Schedule of Selective Demolition Activities: Indicate the following:

1. Detailed sequence of selective demolition and removal work, with starting and ending dates for each activity. Ensure Owner's on-site operations are uninterrupted.
2. Interruption of utility services. Indicate how long utility services will be interrupted.
3. Coordination for shutoff, capping, and continuation of utility services.
4. Use of elevator and stairs.
5. Coordination of Owner's continuing occupancy of portions of existing building and of Owner's partial occupancy of completed Work.

B. Inventory: Submit a list of items to be removed and salvaged and deliver to Owner prior to start of demolition.

C. Predemolition Photographs or Video: Submit before Work begins.

D. Warranties: Documentation indicated that existing warranties are still in effect after completion of selective demolition.

1.7 CLOSEOUT SUBMITTALS

A. Inventory: Submit a list of items that have been removed and salvaged.

B. Landfill Records: Indicate receipt and acceptance of hazardous wastes by a landfill facility licensed to accept hazardous wastes.

1.8 FIELD CONDITIONS

A. Owner may occupy portions of building immediately adjacent to selective demolition area. Conduct selective demolition so Owner's operations will not be disrupted.

B. Conditions existing at time of inspection for bidding purpose will be maintained by Owner as far as practical.

C. Notify Engineer of discrepancies between existing conditions and Drawings before proceeding with selective demolition.

D. Hazardous Materials: It is not expected that hazardous materials will be encountered in the Work.
   1. If suspected hazardous materials are encountered, do not disturb; immediately notify Engineer and Owner. Hazardous materials will be removed by Owner under a separate contract.

E. Storage or sale of removed items or materials on-site is not permitted.

F. Utility Service: Maintain existing utilities indicated to remain in service and protect them against damage during selective demolition operations.

   1. Maintain fire-protection facilities in service during selective demolition operations.

PART 2 - PRODUCTS

2.1 PEFORMANCE REQUIREMENTS

A. Regulatory Requirements: Comply with governing EPA notification regulations before beginning selective demolition. Comply with hauling and disposal regulations of authorities having jurisdiction.

B. Standards: Comply with ANSI/ASSE A10.6 and NFPA 241.

PART 3 - EXECUTION

3.1 EXAMINATION

A. Verify that utilities have been disconnected and capped before starting selective demolition operations.

B. Review record documents of existing construction provided by Owner. Owner does not guarantee that existing conditions are same as those indicated in record documents.

C. Survey existing conditions and correlate with requirements indicated to determine extent of selective demolition required.

D. When unanticipated mechanical, electrical, or structural elements that conflict with intended function or design are encountered, investigate and measure the nature and extent of conflict. Promptly submit a written report to Architect.

E. Perform an engineering survey of condition of existing structures to determine whether removing any element might result in structural deficiency or unplanned collapse of any portion of structure or adjacent structures during selective demolition operations.

1. Perform surveys as the Work progresses to detect hazards resulting from selective demolition activities.

F. Survey of Existing Conditions: Record existing conditions by use of preconstruction photographs.
1. Inventory and record the condition of items to be removed and salvaged. Provide photographs of conditions that might be misconstrued as damage caused by salvage operations.
2. Before selective demolition or removal of existing building elements that will be reproduced or duplicated in final Work, make permanent record of measurements, materials, and construction details required to make exact reproduction.

3.2 UTILITY SERVICES AND MECHANICAL/ELECTRICAL SYSTEMS

A. Existing Services/Systems to Remain: Maintain services/systems indicated to remain and protect them against damage.

1. Comply with requirements for existing services/systems interruptions specified in Section 011000 "Summary."

B. Existing Services/Systems to Be Removed, Relocated, or Abandoned: Locate, identify, disconnect, and seal or cap off indicated utility services and mechanical/electrical systems serving areas to be selectively demolished.

1. Owner will arrange to shut off indicated services/systems when requested by Contractor.
2. Arrange to shut off indicated utilities with utility companies.
3. If services/systems are required to be removed, relocated, or abandoned, provide temporary services/systems that bypass area of selective demolition and that maintain continuity of services/systems to other parts of building.
4. Disconnect, demolish, and remove fire-suppression systems, plumbing, and HVAC systems, equipment, and components indicated to be removed.

a. Piping to Be Removed: Remove portion of piping indicated to be removed and cap or plug remaining piping with same or compatible piping material.
b. Piping to Be Abandoned in Place: Drain piping and cap or plug piping with same or compatible piping material.
c. Equipment to Be Removed: Disconnect and cap services and remove equipment.
d. Equipment to Be Removed and Reinstalled: Disconnect and cap services and remove, clean, and store equipment; when appropriate, reinstall, reconnect, and make equipment operational.
e. Equipment to Be Removed and Salvaged: Disconnect and cap services and remove equipment and deliver to Owner.

f. Ducts to Be Removed: Remove portion of ducts indicated to be removed and plug remaining ducts with same or compatible ductwork material.
g. Ducts to Be Abandoned in Place: Cap or plug ducts with same or compatible ductwork material.

3.3 PREPARATION

A. Site Access and Temporary Controls: Conduct selective demolition and debris-removal operations to ensure minimum interference with roads, streets, walks, walkways, and other adjacent occupied and used facilities.

1. Comply with requirements for access and protection specified in Section 01500 "Temporary Facilities and Controls."

B. Temporary Facilities: Provide temporary barricades and other protection required to prevent injury to people and damage to adjacent buildings and facilities to remain.

1. Provide protection to ensure safe passage of people around selective demolition area and to and from occupied portions of building.
2. Provide temporary weather protection, during interval between selective demolition of existing construction on exterior surfaces and new construction, to prevent water leakage and damage to structure and interior areas.
3. Protect walls, ceilings, floors, and other existing finish work that are to remain or that are exposed during selective demolition operations.
4. Cover and protect furniture, furnishings, and equipment that have not been removed.
5. Comply with requirements for temporary enclosures, dust control, heating, and cooling specified in Section 015000 "Temporary Facilities and Controls."

C. Temporary Shoring: Provide and maintain shoring, bracing, and structural supports as required to preserve stability and prevent movement, settlement, or collapse of construction and finishes to remain, and to prevent unexpected or uncontrolled movement or collapse of construction being demolished.

1. Strengthen or add new supports when required during progress of selective demolition.

3.4 SELECTIVE DEMOLITION, GENERAL

A. General: Demolish and remove existing construction only to the extent required by new construction and as indicated. Use methods required to complete the Work within limitations of governing regulations and as follows:

1. Proceed with selective demolition systematically, from higher to lower level. Complete selective demolition operations above each floor or tier before disturbing supporting members on the next lower level.
2. Neatly cut openings and holes plumb, square, and true to dimensions required. Use cutting methods least likely to damage construction to remain or adjoining construction. Use hand tools or small power tools designed for sawing or grinding, not hammering and chopping, to minimize disturbance of adjacent surfaces. Temporarily cover openings to remain.

3. Cut or drill from the exposed or finished side into concealed surfaces to avoid marring existing finished surfaces.
4. Do not use cutting torches until work area is cleared of flammable materials. At concealed spaces, such as duct and pipe interiors, verify condition and contents of hidden space before starting flame-cutting operations. Maintain portable fire-suppression devices during flame-cutting operations.
5. Maintain adequate ventilation when using cutting torches.
6. Remove decayed, vermin-infested, or otherwise dangerous or unsuitable materials and promptly dispose of off-site.
7. Remove structural framing members and lower to ground by method suitable to avoid free fall and to prevent ground impact or dust generation.
8. Locate selective demolition equipment and remove debris and materials so as not to impose excessive loads on supporting walls, floors, or framing.
9. Dispose of demolished items and materials promptly.

B. Removed and Salvaged Items:

1. Clean salvaged items.
2. Pack or crate items after cleaning. Identify contents of containers.
3. Store items in a secure area until delivery to Owner.
4. Transport items to Owner's storage area designated by Owner.
5. Protect items from damage during transport and storage.

C. Removed and Reinstalled Items:

1. Clean and repair items to functional condition adequate for intended reuse.
2. Pack or crate items after cleaning and repairing. Identify contents of containers.
3. Protect items from damage during transport and storage.
4. Reinstall items in locations indicated. Comply with installation requirements for new materials and equipment. Provide connections, supports, and miscellaneous materials necessary to make item functional for use indicated.

D. Existing Items to Remain: Protect construction indicated to remain against damage and soiling during selective demolition. When permitted by Engineer, items may be removed to a suitable, protected storage location during selective demolition and reinstalled in their original locations after selective demolition operations are complete.

3.5 SELECTIVE DEMOLITION PROCEDURES FOR SPECIFIC MATERIALS

A. Concrete: Demolish in sections. Cut concrete full depth at junctures with construction to remain and at regular intervals using power-driven saw, then remove concrete between saw cuts.

B. Masonry: Demolish in small sections. Cut masonry at junctures with construction to remain, using power-driven saw, then remove masonry between saw cuts.

C. Concrete Slabs-on-Grade: Saw-cut perimeter of area to be demolished, then break up and remove.

D. Resilient Floor Coverings: Remove floor coverings and adhesive according to recommendations in RFCI's "Recommended Work Practices for the Removal of Resilient Floor Coverings."

E. Roofing: Remove no more existing roofing than what can be covered in one day by new roofing and so that building interior remains watertight and weathertight.

1. Remove existing roof membrane, flashings, copings, and roof accessories.
2. Remove existing roofing system down to substrate.

3.6 DISPOSAL OF DEMOLISHED MATERIALS

A. General: Except for items or materials indicated to be reused, salvaged, reinstalled, or otherwise indicated to remain Owner's property, remove demolished materials from Project site and legally dispose of them.

1. Do not allow demolished materials to accumulate on-site.
2. Remove and transport debris in a manner that will prevent spillage on adjacent surfaces and areas.
3. Remove debris from elevated portions of building by chute, hoist, or other device that will convey debris to grade level in a controlled descent.

B. Burning: Burning of demolished materials will be permitted only at designated areas on Owner's property, provided required permits are obtained. Provide full-time monitoring for burning materials until fires are extinguished.

C. Disposal: Transport demolished inert concrete materials and dispose of at designated spoil areas on Owner's property. Transport all other demolished materials off Owner's property and legally dispose of them.

3.7 CLEANING

A. Clean adjacent structures and improvements of dust, dirt, and debris caused by selective demolition operations. Return adjacent areas to condition existing before selective demolition operations began.

END OF SECTION 017320

This page intentionally left blank.

SECTION 017419 - CONSTRUCTION WASTE MANAGEMENT AND DISPOSAL

PART 1 - GENERAL

1.1 SUMMARY

A. Section Includes:

1. Construction waste management plan.
2. Construction waste recycling.
3. Construction waste adaptive reuse.

1.2 PLAN REQUIREMENTS

A. Develop and implement construction waste management plan as approved by Engineer**.**

B. Intent:

1. Divert construction, demolition, and land-clearing debris from landfill disposal.
2. Redirect recyclable material back to manufacturing process.
3. Generate cost savings or increase minimal additional cost to Project for waste disposal.

1.3 SUBMITTALS

A. Construction Waste Management Plan: Submit construction waste management plan describing methods and procedures for implementation and monitoring compliance including the following:

1. Transportation company hauling construction waste to waste processing facilities.
2. Recycling and adaptive reuse processing facilities and waste type each facility will accept.
3. Construction waste materials anticipated for recycling and adaptive reuse.
4. On-Site sorting and Site storage methods.

B. Submit documentation with each application for payment substantiating construction waste management plan was maintained and goals are being achieved.

1. Trash: Quantity by weight deposited in landfills. Include associated fees, transportation costs, container rentals, and taxes for total cost of disposal.
2. Salvaged Material: Quantity by weight with destination for each type of material salvaged for resale, recycling, or adaptive reuse. Include associated fees, transportation costs, container rentals, taxes for total cost of disposal, and reimbursements due to salvage resale.
3. Total Cost: Indicate total cost or savings for implementation of construction waste management plan.

1.4 CONSTRUCTION WASTE MANAGEMENT PLAN

A. Construction Waste Landfill Diversion: Minimum 75 percent by weight of construction waste materials for duration of Project through resale, recycling, or adaptive reuse.

B. Implement construction waste management plan at start of construction.

C. Review construction waste management plan at preconstruction meeting and progress meetings.

D. Distribute approved construction waste management plan to Subcontractors and others affected by plan requirements.

E. Oversee plan implementation, instruct construction personnel for plan compliance, and document plan results.

F. Purchase products to prevent waste by:

1. Ensuring correct quantity of each material is delivered to Site.
2. Choosing products with minimal or no packaging.
3. Requiring suppliers to use returnable pallets or containers.
4. Requiring suppliers to take or buy back rejected or unused items.

1.5 CONSTRUCTION WASTE RECYCLING

A. Use source separation method or comingling method suitable to sorting and processing method of selected recycling center. Dispose nonrecyclable trash separately into landfill.

B. Source Separation Method: Recyclable materials separated from trash and sorted into separate bins or containers, identified by waste type, prior to transportation to recycling center.

C. Comingling Method: Recyclable materials separated from trash and placed in unsorted bins or container for sorting at recycling center.

1.6 CONSTRUCTION WASTE ADAPTIVE REUSE

A. Arrange with processing facility for salvage of construction material and processing for reuse. Do not reuse construction materials on-Site except as allowed by Engineer.

PART 2 - PRODUCTS - Not Used

PART 3 - EXECUTION

3.1 CONSTRUCTION WASTE COLLECTION

A. Collect construction waste materials in marked bins or containers and arrange for transportation to recycling centers or adaptive salvage and reuse processing facilities.

B. Maintain recycling and adaptive reuse storage and collection area in orderly arrangement with materials separated to eliminate co-mingling of materials required to be delivered separately to waste processing facility.

3.2 CONSTRUCTION WASTE DISPOSAL

A. Deliver construction waste to waste processing facilities. Obtain receipt for deliveries.

B. Dispose of construction waste not capable of being recycled or adaptively reused by delivery to landfill, incinerator, or other legal disposal facility. Obtain receipt for deliveries.

END OF SECTION 017419

This page intentionally left blank.

SECTION 017810 – PROJECT RECORD DOCUMENTS

PART 1 - GENERAL

1.1 RELATED DOCUMENTS

A. Drawings and general provisions of the Contract, including General and Supplementary Conditions and other Division 01 Specification Sections, apply to this Section.

1.2 SUMMARY

A. Section includes administrative and procedural requirements for project record documents, including the following:

1. Record Drawings.
2. Record Specifications.
3. Record Product Data.
4. Miscellaneous record submittals.

B. Related Requirements:

1. Section 017000 "Execution and Closeout Requirements" for final property survey.

1.3 CLOSEOUT SUBMITTALS

A. Record Drawings: Comply with the following:

1. Number of Copies: Submit one set(s) of marked-up record prints.

B. Record Specifications: Submit one paper copy of Project's Specifications, including addenda and contract modifications.

C. Record Product Data: Submit one paper copy of each submittal.

1. Where record Product Data are required as part of operation and maintenance manuals, submit duplicate marked-up Product Data as a component of manual.

D. Miscellaneous Record Submittals: See other Specification Sections for miscellaneous record-keeping requirements and submittals in connection with various construction activities. Submit one paper copy of each submittal.

E. Reports: Submit written report indicating items incorporated into project record documents concurrent with progress of the Work, including revisions, concealed conditions, field changes, product selections, and other notations incorporated.

PART 2 - PRODUCTS

2.1 RECORD DRAWINGS

A. Record Prints: Maintain one set of marked-up paper copies of the Contract Drawings and Shop Drawings, incorporating new and revised drawings as modifications are issued.

1. Preparation: Mark record prints to show the actual installation where installation varies from that shown originally. Require individual or entity who obtained record data, whether individual or entity is Installer, subcontractor, or similar entity, to provide information for preparation of corresponding marked-up record prints.

   a. Give particular attention to information on concealed elements that would be difficult to identify or measure and record later.
   b. Accurately record information in an acceptable drawing technique.
   c. Record data as soon as possible after obtaining it.
   d. Record and check the markup before enclosing concealed installations.
   e. Cross-reference record prints to corresponding archive photographic documentation.

2. Content: Types of items requiring marking include, but are not limited to, the following:

   a. Dimensional changes to Drawings.
   b. Revisions to details shown on Drawings.
   c. Depths of foundations below first floor.
   d. Locations and depths of underground utilities.
   e. Revisions to routing of piping and conduits.
   f. Revisions to electrical circuitry.
   g. Actual equipment locations.
   h. Duct size and routing.
   i. Locations of concealed internal utilities.
   j. Changes made by Change Order or Work Change Directive.
   k. Changes made following Engineer's written orders.
   l. Details not on the original Contract Drawings.
   m. Field records for variable and concealed conditions.
   n. Record information on the Work that is shown only schematically.

3. Mark the Contract Drawings and Shop Drawings completely and accurately. Use personnel proficient at recording graphic information in production of marked-up record prints.
4. Mark record sets with erasable, red-colored pencil. Use other colors to distinguish between changes for different categories of the Work at same location.
5. Mark important additional information that was either shown schematically or omitted from original Drawings.
6. Note Construction Change Directive numbers, alternate numbers, Change Order numbers, and similar identification, where applicable.

B. Newly Prepared Record Drawings: Prepare new Drawings instead of preparing record Drawings where Engineer determines that neither the original Contract Drawings nor Shop Drawings are suitable to show actual installation.

1. New Drawings may be required when a Change Order is issued as a result of accepting an alternate, substitution, or other modification.
2. Consult Engineer for proper scale and scope of detailing and notations required to record the actual physical installation and its relation to other construction. Integrate newly prepared record Drawings into record Drawing sets; comply with procedures for formatting, organizing, copying, binding, and submitting.

C. Format: Identify and date each record Drawing; include the designation "PROJECT RECORD DRAWING" in a prominent location.

1. Record Prints: Organize record prints and newly prepared record Drawings into manageable sets. Bind each set with durable paper cover sheets. Include identification on cover sheets.
2. Identification: As follows:

a. Project name.
b. Date.
c. Designation "PROJECT RECORD DRAWINGS."
d. Name of Engineer.
e. Name of Contractor.

2.2 RECORD SPECIFICATIONS

A. Preparation: Mark Specifications to indicate the actual product installation where installation varies from that indicated in Specifications, addenda, and contract modifications.

1. Give particular attention to information on concealed products and installations that cannot be readily identified and recorded later.
2. Mark copy with the proprietary name and model number of products, materials, and equipment furnished, including substitutions and product options selected.
3. Record the name of manufacturer, supplier, Installer, and other information necessary to provide a record of selections made.
4. For each principal product, indicate whether record Product Data has been submitted in operation and maintenance manuals instead of submitted as record Product Data.
5. Note related Change Orders and record Drawings where applicable.

B. Format: Submit record Specifications as paper copy.

2.3 RECORD PRODUCT DATA

A. Preparation: Mark Product Data to indicate the actual product installation where installation varies substantially from that indicated in Product Data submittal.

1. Give particular attention to information on concealed products and installations that cannot be readily identified and recorded later.
2. Include significant changes in the product delivered to Project site and changes in manufacturer's written instructions for installation.
3. Note related Change Orders and record Drawings where applicable.

B. Format: Submit record Product Data as paper copy.

1. Include record Product Data directory organized by Specification Section number and title, electronically linked to each item of record Product Data.

2.4 MISCELLANEOUS RECORD SUBMITTALS

A. Assemble miscellaneous records required by other Specification Sections for miscellaneous record keeping and submittal in connection with actual performance of the Work. Bind or file miscellaneous records and identify each, ready for continued use and reference.

B. Format: Submit miscellaneous record submittals as paper copy.

1. Include miscellaneous record submittals directory organized by Specification Section number and title, electronically linked to each item of miscellaneous record submittals.

PART 3 - EXECUTION

3.1 RECORDING AND MAINTENANCE

A. Recording: Maintain one copy of each submittal during the construction period for project record document purposes. Post changes and revisions to project record documents as they occur; do not wait until end of Project.

B. Maintenance of Record Documents and Samples: Store record documents and Samples in the field office apart from the Contract Documents used for construction. Do not use project record documents for construction purposes. Maintain record documents in good order and in a clean, dry, legible condition, protected from deterioration and loss. Provide access to project record documents for Engineer's reference during normal working hours.

END OF SECTION 017810

SECTION 115000 – DUPLEX PACKAGE GRINDER PUMP STATION

PART 1 - GENERAL PUMP STATION No. 2

1.1 GENERAL REQUIREMENTS

A. The **MANUFACTURER** shall furnish complete factory-built and tested grinder pump unit(s), each consisting of a grinder pump core suitably mounted on an integral stand of stainless steel, tank, electrical quick disconnect (NEMA 6P), pump removal harness, discharge assembly/shut-off valve, anti-siphon valve/check valve assembly, electrical alarm assembly and all necessary internal wiring and controls. For ease of serviceability, all pump motor/grinder units shall be of like type and horsepower throughout the system.

B. The general provisions of the contract, including the General and Supplementary Conditions and General Requirements (if any) apply to the work specified in this section.

1.2 SYSTEM DESCRIPTION

A. The contractor shall furnish and install pre-engineered, factory-built, automatically controlled packaged grinder pumping station(s) with submersible pumps capable of handling raw unscreened sewage, sludge, and similar domestic liquids. Pump stations shall be installed in the locations shown on the Plans, and as specified herein.

B. The factory-built pump station design, materials of construction, pumps, valves and piping, and motor/electrical controls shall be manufactured and provided in strict accordance with the requirements as listed under PART 2 - PRODUCTS of this specification section

C. Pumping station(s) provided for this project shall be W-Series Duplex Wetwell Grinder Pump Station with wired level sensor factory-built systems, as offered by E One Sewer Systems. Alternate equipment will be considered only when pre-submitted in accordance with the requirements of these Specifications. After-the-fact substitutions will not be considered without prior approval.

1.3 DESCRIPTION OF WORK REQUIRED

A. The extent of work required and requirements for the wastewater pumping station for this project are shown on the project drawings and described herein.

B. The work required at each wastewater pump station shall include, but is not limited to, the following:

1. Site grading, erosion control, and weed control as shown on the Plans.
2. Installation of one factory-built prefabricated wastewater pumping station as specified herein.

3. Piping required for each pump station, including all factory-furnished and installed piping, valves, fittings, base elbow, submersible pumps, contractor-furnished piping and valves, and force main piping as specified herein, or as shown on the Plans.
4. Electrical work required for each pump station: main electrical service with utility meter and disconnect, station lighting as may be shown on the Plans, installation of an alarm light at each station, and all necessary conduit and wiring that may be required to provide power for proper installation and operation.
5. Finish work as required to complete the installation of the pump station: finish grading, erosion control, weed control, sod and/or grass seed, shrubbery, other landscaping indicated on the Plans.

C. The Contractor shall furnish and install, as shown on the Plans and specified herein, one factory-built automatic duplex grinder pump station. The station provided for this project shall comply with the detailed descriptions that follow.

1. The principal items of equipment to be provided with each pump station shall include two submersible centrifugal solids-handling pumps, each provided with a compatible Quick Discharge Connector system, guide rails, anchor bolts, stainless steel lifting chain with intermediate links and all associated hardware, a steel reinforced polymer concrete station top slab with integral aluminum wet well access cover, station valves, internal piping of the sizes indicated herein or on the Plans, and a complete factory-built motor control center with circuit breakers, motor starters and automatic liquid level control system as specified herein to constitute a complete, working system.
2. The pumping station provided for this project shall be W-Series Duplex Wetwell Grinder Pump Station with wired level sensor factory-built systems, as offered by E One Sewer Systems. Submersible grinder pumps shall be E One models; with the specific pump size, impeller type and motor HP as indicated elsewhere herein.
3. Alternates proposed for use on this project shall be considered only if full and complete pre-submittal data for all proposed equipment is received no later than fourteen (14) calendar days prior to the bid date. Pre-submittal shall comply with the requirements of Section 1.06 below. The decision of the Engineer regarding the equality of any/all proposed alternates is final, and resubmittal of equipment will not be allowed.

D. Pumps and all mechanical accessories provided for each sewage pump station shall be installed in/on each wet well as indicated on the Plans and as outlined herein.

1. The duplex liquid level control system, valves, piping necessary to provide a complete working system shall be installed inside a heavy duty factory built fiberglass Wetwell.
2. Each complete sewage pump station shall be a regular production item of the submersible pump manufacturer, not a locally assembled compilation of parts and/or components by a third party. The use of conventional station designs which utilize external concrete or fiberglass below-ground valve vaults, bare concrete slab construction or concrete poured inside a fiberglass shell where it may be exposed to condensation of sewage gases (not steel reinforced polymer concrete as specified), or the use of fabricated steel construction is not be considered equivalent to the specified factory-built system, and shall not be furnished.

1.4 PERFORMANCE CRITERIA

A. Each pump shall be designed to handle raw, unscreened domestic sanitary sewage. Pumps shall be furnished with a minimum 1 1/4" discharge connection. Each pump shall be selected to provide the stated capacity and total dynamic head as noted elsewhere herein. Additional performance criteria can be found under the requirements of Section 2.06 B. herein.

B. Site power furnished to pump station shall be 240/1/60VAC 3-wire electrical service, maintained within industry standards. The available fault current provided at the pump station control panel is 10kA RMS symmetrical. Voltage tolerance shall be plus or minus 10 percent. Phase-to-phase unbalance shall not exceed 1% average voltage as set forth in NEMA standard MG-1. Control voltage shall not exceed 240 volts.

1.5 SUBMITTALS

A. Product Data

1. Prior to fabrication, the pump station manufacturer shall submit eight copies of submittal data for review and approval. Additional copies will be provided as required to comply with the contractor, supplier, or manufacturer's need for extra returned copies.
2. Submittal shall include shop drawings, electrical ladder logic drawings, and support data as follows: Catalog cuts sheets reflecting characteristics for major items of equipment, materials of construction, major dimensions, motor data, pump characteristic curves to illustrate the design duty point capacity (GPM), head (FT), pump efficiency (n_p), and brake horsepower (BHP). Electrical components used in the motor branch and liquid level control shall be fully described.
3. Shop drawings shall provide layout of mechanical equipment and anchor bolt locations for the Quick Discharge Connector, base elbow, and guide rail components. Pipe penetrations and station access clearances shall be dimensioned relative to the station centerline. Electrical ladder logic drawings shall illustrate motor branch and liquid level control circuits to the extent necessary to validate function and integration of circuits to form a complete working system.

B. Operation & Maintenance Manuals

1. Installation shall be in accordance with written instructions provided by the pump station manufacturer. Comprehensive instructions supplied at time of shipment shall enable personnel to properly install, operate, and maintain all equipment supplied. Content and instructions shall assume operations personnel are familiar with pumps, motors, piping and valves, but lack experience on the exact equipment supplied.
2. Documentation shall be specific to the pump station supplied and collated in functional sections. Each section shall combine to form a complete system manual covering all aspects of equipment supplied by the station manufacturer. Support data for any equipment supplied by others, even if mounted or included in overall station design, shall be provided by those supplying the equipment and a separate section shall be so designated in the O&M Manual. Instructions shall include the following as a minimum:

    a. Functional description of each major component, complete with operating instructions.
    b. Instructions for operating pumps and pump controls in all modes of operation.

c. Calibration and adjustment of equipment for initial equipment start-up, replacement of level control components, or as may be required for routine maintenance.
d. Support data for commercially available components not produced by the station manufacturer, but supplied in accordance with the Specifications, shall be supported by literature from the prime manufacturer and incorporated as appendices.
e. Electrical schematic diagram of the pump station circuits shall be in accordance with NFPA70. Schematics shall illustrate, to the extent of authorized repair, pump motor branch, control and alarm system circuits including interconnections. Wire numbers and legend symbols shall be shown. Schematic diagrams for individual components, not normally repairable by the station operator, need not be included. Details for such parts shall not be substituted for an overall system schematic. Partial schematics, block diagrams, and simplified schematics shall not be provided in lieu of an overall system diagram.
f. Mechanical layout drawing of the pump station and components, prepared in accordance with good commercial practice, shall provide installation dimensions and location of all pumps, valves and piping.

3. Operation and maintenance instructions that rely on vendor cut-sheets and literature that includes general configurations, or requires operations personnel to selectively read portions of the manual shall not be acceptable. Operation and maintenance instructions must be specific to equipment supplied in accordance with these Specifications.

1.6 QUALITY ASSURANCE

A. Upon request from the Engineer (or Owner), the pump station manufacturer shall prove financial stability long-term performance and the ability to produce the specified station within the specified delivery schedules. At the request of the Engineer (or Owner) the pump station manufacturer shall provide evidence of the facilities, inventory, equipment and expertise that demonstrates the manufacturer's commitment to long-term customer service and product support. Such evidence shall be demonstrated exclusively by a visit to the pump station manufacturer's facility by the Engineer (or Owner).

B. The manufacturer must show proof of original product design and testing. Products violating intellectual property regulations shall not be allowed, as they may violate international law and expose the user or Engineer to unintended liabilities. “Reverse-engineered” products fabricated to substantially duplicate the design of an original product shall not be allowed, as they may contain substantial differences in tolerances and material applications addressed in the original design, which may contribute to product failure.

C. The manufacturer must show that the basic pump station design configuration and equipment used in the pump station is a standard product and has been factory tested, and shall be marketed as all components to be supplied having been assembled, operated, and tested to meet the requirements of these Specifications.

D. The term “pump manufacturer” or “pump station manufacturer” shall be defined as the entity which designs, fabricates, machines, assembles, hydraulically tests, and warrants the final product. Any entity that does not meet this definition will not be considered a “pump manufacturer” or “pump station manufacturer” and is not an acceptable supplier. For quality

control reasons and to ensure future pump and parts availability, all major components of the pumps provided shall be readily available from the manufacturer's regular inventory in the United States of America.

E. The manufacturer's technical representative shall inspect the completed installation, correct or supervise the correction of any defect or malfunction, and instruct operating personnel in the proper operation and maintenance of the equipment as described in Part 3 – EXECUTION of this specification section

1.7 MANUFACTURER'S EXPERIENCE REQUIREMENTS

A. It is the specific intention of these Specifications that the wastewater pump station provided for this project be provided by a manufacturer with documented experience in the design, production, and successful installation of submersible grinder pumps and factory-built submersible grinder pump stations.

1. The station manufacturer shall have a minimum of twenty (20) calendar years of experience in the production of submersible sewage pumps and related equipment, and shall have the facilities and personnel in place to provide support of the specified factory-built above-ground submersible pumping stations.
2. The pumps, station base, piping assembly, and other related equipment will be a standard production item of the station manufacturer.
3. The pump manufacturer shall maintain adequate levels of inventory to be able to provide replacement parts for pumps, including major components such as impellers, casings, and motors, directly from normal stock. Proof of inventory at the pump station manufacturer's normal place of business may be required prior to approval of any submittal data. Proof of inventory shall be confirmed by a visit to the manufacturer's facility, with the cost of the visit to be borne by the pump station manufacturer. Costs for this trip, if required, shall include transportation, lodging, and all meals for not less than six (6) representatives of the municipality and/or the consulting engineer.

B. No consideration will be given to any equipment manufacturer who cannot comply with <u>all</u> of the requirements stated in Sections 1.05, 1.07, and 1.08.

C. Upon request from the Engineer, the equipment <u>manufacturer</u> shall document the existence of a *<u>factory-authorized</u>* service and repair facility within a reasonable distance of the job site prior to bidding the specified pump station

1.8 MANUFACTURER'S WARRANTY

A. The pump station manufacturer shall warrant all equipment provided to be of quality construction, free of defects in material and workmanship. A written warranty shall include specific details described below:

1. The grinder pump manufacturer shall provide a part(s) and labor warranty on the complete station and accessories, including, but not limited to, the panel for a period of 24 months after notice of owner's acceptance, but no greater than 27 months after receipt of shipment. Any manufacturing

defects found during the warranty period will be reported to the manufacturer by the owner and will be corrected by the manufacturer at no cost to the owner.

B. Components that fail to perform as specified by the Engineer, or as represented by the manufacturer, or as proven defective in service during the warranty period, shall be replaced, repaired, or satisfactorily modified by the manufacturer.

C. Equipment supplied by others and incorporated into a pump station or enclosure is not covered by this limited warranty. Any warranty applicable to equipment selected or supplied by others will be limited solely to the warranty, if any, provided by the manufacturer of the equipment.

PART 2 - PRODUCTS

2.1 UNITARY RESPONSIBILITY

A. In order to unify responsibility for proper operation of the complete pump station, it is the intent of these Specifications that all system components are furnished by a single supplier (unitary source). The pumping station must be a standard catalog design, and totally warranted by the manufacturer. Under no circumstances will a pumping system consisting of parts compiled and assembled by a manufacturer's representative, distributor, or other source be considered accepted.

2.2 MANUFACTURER

A. The Specifications and project drawings depict equipment and materials that are manufactured by E One Sewer Systems, which has been deemed the most suitable for the service anticipated. It is not intended to eliminate other products of equal quality and performance (refer to Section 1.04.C.3). However, the contractor shall prepare his bid based on the specified equipment for purposes of determining low bid. Award of a contract shall constitute an obligation to furnish the specified equipment and materials.

B. After execution of the contract, the contractor may offer substitutions to the specified equipment for consideration. The equipment proposed for substitution must be in compliance with Section 1.04.C.3, superior in construction and performance to that specified in the contract, and the higher quality must be demonstrated by a list of current users of the proposed equipment in similar installations.

C. In event the contractor obtains Engineer's approval for equipment substitution, the contractor shall, at his own expense, make all resulting changes to the enclosures, buildings, piping or electrical systems as required to accommodate the proposed equipment. Revised detail drawings illustrating the substituted equipment shall be submitted to the Engineer prior to acceptance.

D. It will be assumed that the contractor’s cost for the alternate equipment proposed is less for the proposed substitution, and if approved, the contract price shall be reduced by an amount equal to the savings.

2.3 PUMP DESIGN

A. The pump shall be a custom designed, integral, vertical rotor, motor driven, solids handling pump of the progressing cavity type with a single mechanical seal. Double radial O-ring seals are required at all casting joints to minimize corrosion and create a protective barrier. All pump castings shall be cast iron, fully epoxy coated to 8-10 mil Nominal dry thickness, wet applied. The rotor shall be through-hardened, highly polished, precipitation hardened stainless steel. The stator shall be of a specifically compounded ethylene propylene synthetic elastomer. This material shall be suitable for domestic wastewater service. Its physical properties shall include high tear and abrasion resistance, grease resistance, water and detergent resistance, temperature stability, excellent aging properties, and outstanding wear resistance. Buna-N is not acceptable as a stator material because it does not exhibit the properties as outlined above and required for wastewater service.

B. The grinder shall be placed immediately below the pumping elements and shall be direct-driven by a single, one-piece motor shaft. The grinder impeller (cutter wheel) assembly shall be securely fastened to the pump motor shaft by means of a threaded connection attaching the grinder impeller to the motor shaft. Attachment by means of pins or keys will not be acceptable. The grinder impeller shall be a one-piece, 4140 cutter wheel of the rotating type with inductively hardened cutter teeth. The cutter teeth shall be inductively hardened to Rockwell 50 – 60c for abrasion resistance. The shredder ring shall be of the stationary type and the material shall be white cast iron. The teeth shall be ground into the material to achieve effective grinding. The shredder ring shall have a staggered tooth pattern with only one edge engaged at a time, maximizing the cutting torque. These materials have been chosen for their capacity to perform in the intended environment as they are materials with wear and corrosive resistant properties. This assembly shall be dynamically balanced and operate without objectionable noise or vibration over the entire range of recommended operating pressures. The grinder shall be constructed so as to minimize clogging and jamming under all normal operating conditions including starting. Sufficient vortex action shall be created to scour the tank free of deposits or sludge banks which would impair the operation of the pump. These requirements shall be accomplished by the following, in conjunction with the pump:
   1. The grinder shall be positioned in such a way that solids are fed in an upward flow direction.
   2. The maximum flow rate through the cutting mechanism must not exceed 4 feet per second. This is a critical design element to minimize jamming and as such must be adhered to.
   3. The inlet shroud shall have a diameter of no less than 5 inches. Inlet shrouds that are less than 5 inches in diameter will not be accepted due to their inability to maintain the specified 4 feet per second maximum inlet velocity which by design prevents unnecessary jamming of the cutter mechanism and minimizes blinding of the pump by large objects that block the inlet shroud.
   4. The impeller mechanism must rotate at a nominal speed of no greater than 1800 rpm.

C. The grinder shall be capable of reducing all components in normal domestic sewage, including a reasonable amount of “foreign objects,” such as paper, wood, plastic, glass, wipes, rubber and the like, to finely-divided particles which will pass freely through the passages of the pump and the 1-1/4" diameter stainless steel discharge piping.

D. As a maximum, the motor shall be a 1 HP, 1725 RPM, 240 Volt 60 Hertz, 1 Phase, capacitor start, ball bearing, air-cooled induction type with Class F installation, low starting current not to

exceed 30 amperes and high starting torque of 8.4 foot pounds. The motor shall be press-fit into the casting for better heat transfer and longer winding life. Inherent protection against running overloads or locked rotor conditions for the pump motor shall be provided by the use of an automatic-reset, integral thermal overload protector incorporated into the motor. This motor protector combination shall have been specifically investigated and listed by Underwriters Laboratories, Inc., for the application. Non-capacitor start motors or permanent split capacitor motors will not be accepted because of their reduced starting torque and consequent diminished grinding capability. The wet portion of the motor armature must be 300 Series stainless. To reduce the potential of environmental concerns, the expense of handling and disposing of oil, and the associated maintenance costs, oil-filled motors will not be accepted.

E. The pump/core shall be provided with a mechanical shaft seal to prevent leakage between the motor and pump. The seal shall have a stationary ceramic seat and carbon rotating surface with faces precision lapped and held in position by a stainless steel spring.

F. Thrust clamps, also sized to match the header piping diameter, shall be provided on the underside of the station base slab for each pump riser pipe to eliminate any movement of the piping inside the fiberglass enclosure as a result of hydraulic thrust during operation. A third thrust clamp shall be provided on the topside of the station base to support the piping assembly during production and shipment to the job site. The contractor in accordance with the station manufacturer's recommendations shall install thrust clamps.

2.4 WET WELL

A. The tank shall be a wetwell design consisting of a single wall, laminated fiberglass construction. The resin used shall be of a commercial grade suitable for the environment. The reinforcing material shall be a commercial grade of glass fiber capable of bonding with the selected resin. The inner surface shall have a smooth finish and be free of cracks and crazing. The exterior tank surface shall be relatively smooth with no exposed fiber or sharp projections present.

B. The tank wall and bottom shall be of sufficient thickness and construction to withstand the imposed loading due to saturated soil at the specified burial depth for each available tank height. All station components must function normally when exposed to the external soil and hydrostatic pressures developed at the specified burial depth. The tank bottom shall be reinforced with a fiberglass plate extending beyond the tank walls to support concrete anchoring, as required, to prevent flotation.

C. The Fiberglass tank shall have a stainless steel discharge bulkhead which terminates outside the tank wall with a 1-1/4" female pipe thread. The discharge bulkhead shall be factory installed and warranted by the manufacturer to be watertight. The tank shall be furnished with a field installed EPDM grommet to accept a 4.50" OD (4" DWV or SCH 40) inlet pipe.

D. The power and control cable shall connect to the pump by means of the provided NEMA 6P Electrical Quick Disconnect (EQD) and shall enter the tank through a field installed watertight strain relief connector supplied by the manufacturer. An electrical junction box shall not be permitted in the tank. Installation of the inlet grommet and cable strain relief shall require field penetration of the tank wall by the installing party. The tank shall also be vented to prevent sewage gases from accumulating inside the tank by means of a factory-provided, field-installed mushroom vent. The station cover shall be factory drilled to accept the mushroom vent. The tank and stainless steel discharge bulkhead shall be factory-tested to be watertight. The entire

installation shall be provided in strict compliance with all applicable NEC and NFPA820 requirements for hazardous locations. The pump station supplier shall provide specific written direction to the installing contractor on the electrical installation provisions required for a fully-functional, code-compliant installation.

E. Consult the contract drawings for station tank sizes (diameter and height).

2.5 STATION VALVES AND PIPING

A. All discharge fittings and piping shall be constructed of polypropylene, EPDM or PVC. The discharge hose assembly shall include a shut-off valve rated for 200 psi WOG and a quick disconnect feature to simplify installation and pump removal. The bulkhead penetration shall be factory installed and warranted by the manufacturer to be watertight.

B. The grinder pump core shall include a factory-installed NEMA 6P electrical quick disconnect (EQD) for all power and control functions. The EQD will be supplied with 32', 25' of useable, electrical supply cable (ESC) to connect to the alarm panel. The EQD shall require no tools for assembly, seal against water before the electrical connection is made, and include radial seals to assure a watertight seal regardless of tightening torque. Plug-type connections of the power cable onto the pump housing will not be acceptable due to the potential for leaks and electrical shorts. Junction boxes are not acceptable due to the large number of potential leak points. The EQD shall be so designed to be conducive to field wiring as required.

C. The pump discharge shall be equipped with a factory installed, gravity operated, flapper-type integral check valve built into the discharge piping. The check valve will provide a full-ported passageway when open, and shall introduce a friction loss of less than 6 inches of water at maximum rated flow. Moving parts will be made of a 300 Series stainless steel and fabric reinforced synthetic elastomer to ensure corrosion resistance, dimensional stability, and fatigue strength. A nonmetallic hinge shall be an integral part of the flapper assembly providing a maximum degree of freedom to assure seating even at a very low back-pressure. The valve body shall be an injection molded part made of an engineered thermoplastic resin. The valve shall be rated for continuous operating pressure of 235 psi. Ball-type check valves are unacceptable due to their limited sealing capacity in slurry applications.

D. The pump discharge shall be equipped with a factory-installed, gravity-operated, flapper-type integral anti-siphon valve built into the discharge piping. Moving parts will be made of 300 Series stainless steel and fabric-reinforced synthetic elastomer to ensure corrosion resistance, dimensional stability, and fatigue strength. A nonmetallic hinge shall be an integral part of the flapper assembly, providing a maximum degree of freedom to ensure proper operation even at a very low pressure. The valve body shall be injection-molded from an engineered thermoplastic resin. Holes or ports in the discharge piping are not acceptable anti-siphon devices due to their tendency to clog from the solids in the slurry being pumped. The anti-siphon port diameter shall be no less than 60% of the inside diameter of the pump discharge piping.

E. The grinder pump station shall have an easily removable core assembly containing pump, motor, grinder, all motor controls, check valve, anti-siphon valve, electrical quick disconnect

and wiring. The watertight integrity of the core unit shall be established by a 100% factory test at a minimum of 5 PSIG.

2.6 SUPPORTS AND THRUST BLOCKS

A. All piping connected to the pump station shall be supported in accordance with good commercial practice. The control panel, control power transformer, and discharge pressure gauge shall be mounted on a supporting framework of fabricated steel. The support frame shall be drilled to accept all equipment, and shall be constructed entirely of fabricated steel angle shapes.

2.7 FINISH

A. All above ground station piping, control panel, and exposed steel framework shall be cleaned with industrial grade chemical cleaner. The prime coat shall be zinc-based synthetic primer. The finish coat shall be a high performance protective enamel coating.

2.8 ELECTRICAL CONTROLS

A. A complete pump control system shall be provided as a part of the factory-built pump station assembly. The pump station control panel shall be tested as an integral unit by the pump station manufacturer.

1. All necessary motor starting controls shall be located in the cast iron enclosure of the core unit secured by stainless steel fasteners. Locating motor starting controls in a plastic enclosure is not acceptable. Wastewater level sensing controls shall be housed in a separate enclosure from motor starting controls. Level sensor housing must be sealed via a radial type seal; solvents or glues are not acceptable. Level sensing control housing must be integrally attached to pump assembly so that it may be removed from the station with the pump and in such a way as to minimize the potential for the accumulation of grease and debris accumulation, etc. Level sensing housing must be a high-impact thermoplastic copolymer over-molded with a thermo plastic elastomer. The use of PVC for the level sensing housing is not acceptable.
2. Non-fouling wastewater level controls for controlling pump operation shall be accomplished by monitoring the pressure changes in an integral air column connected to a pressure switch. The air column shall be integrally molded from a thermoplastic elastomer suitable for use in wastewater and with excellent impact resistance. The air column shall have only a single connection between the water level being monitored and the pressure switch. Any connections are to be radial sealed with redundant O-rings. The level detection device shall have no moving parts in direct contact with the wastewater and shall be integral to the pump core assembly in a single, readily-exchanged unit. Depressing the push to run button must operate the pump even with the level sensor housing removed from the pump.
3. All fasteners throughout the assembly shall be 300 Series stainless steel. High-level sensing will be accomplished in the manner detailed above by a separate air column sensor and pressure switch of the same type. Closure of the high-level sensing device will energize an alarm circuit as well as a redundant pump-on circuit. For increased reliability, pump ON/OFF and high-level alarm functions shall not be controlled by the same switch. Float switches of any kind, including float trees, will not be accepted due to the periodic

need to maintain (rinsing, cleaning) such devices and their tendency to malfunction because of incorrect wiring, tangling, grease buildup, and mechanical cord fatigue. To assure reliable operation of the pressure switches, each core shall be equipped with a factory installed equalizer diaphragm that compensates for any atmospheric pressure or temperature changes. Tube or piping runs outside of the station tank or into tank-mounted junction boxes providing pressure switch equalization will not be permitted due to their susceptibility to condensation, kinking, pinching, and insect infestation. The grinder pump will be furnished with a 6 conductor 14 gauge, type SJOW cable, pre-wired and watertight to meet UL requirements with a factory installed NEMA 6P EQD half attached to it.

B. Each grinder pump station shall include a NEMA 4X, UL-listed alarm panel suitable for wall or pole mounting. The NEMA 4X enclosure shall be manufactured of thermoplastic to ensure corrosion resistance. The enclosure shall include a hinged, lockable cover with padlock, preventing access to electrical components, and creating a secured safety front to allow access only to authorized personnel. The standard enclosure shall not exceed 12.5" W x 16" H x 7.5" D.

1. The panel shall contain one 15-amp single pole circuit breaker for the alarm circuit and one 15-amp double pole circuit breaker per core for the power circuit. The panel shall contain a push-to-run feature, an internal run indicator, and a complete alarm circuit. All circuit boards in the alarm panel are to be protected with a conformal coating on both sides and the AC power circuit shall include an auto resetting fuse.
2. The visual alarm lamp shall be inside a red, oblong lens at least 3.75" L x 2.38" W x 1.5" H. Visual alarm shall be mounted to the top of the enclosure in such a manner as to maintain NEMA 4X rating. The audible alarm shall be externally mounted on the bottom of the enclosure, capable of 93 dB @ 2 feet. The audible alarm shall be capable of being deactivated by depressing a push-type switch that is encapsulated in a weatherproof silicone boot and mounted on the bottom of the enclosure (push-to-silence button).
3. The high-level alarm system shall operate as follows:
   a. The panel will go into alarm mode if either pump's alarm switch closes. During the initial alarm mode both pumps will run and the alarm light and buzzer will be delayed for a period of time based on user settings (default is 3-1/2 minutes). If the station is still in high-level alarm after the delay, the light and buzzer will be activated.
   b. The audible alarm may be silenced by means of the externally mounted push-to-silence button.
   c. The visual alarm remains illuminated until the sewage level in the wet well drops below the "off" setting
4. The entire alarm panel, as manufactured and including any of the following options shall be listed by Underwriters Laboratories, Inc.

C. The alarm panel shall include a 20 amp, 250 VAC generator receptacle with a spring-loaded, gasketed cover suitably mounted to provide access for connection of an external generator while maintaining a NEMA 4X rating. An automatic transfer switch shall be provided, which automatically switches from AC power to generator power. Power shall be provided to the alarm panel through the generator receptacle whenever power is present at the receptacle, allowing the audible and visual alarms to function normally in generator mode. When power is no longer applied to the generator receptacle, the panel is automatically switched back to the AC Mains power. (No manual switching within the panel enclosure is necessary to switch from generator power back to AC Mains, so the mode cannot be inadvertently left in the generator

position after pumping down the station in generator mode as is the case with a manual transfer switch).

PART 3 - EXECUTION

3.1 EXAMINATION

A. Contractor shall off-load equipment at installation site using equipment of sufficient size and design to prevent injury or damage. Station manufacturer shall provide written instruction for proper handling. Immediately after off-loading, contractor shall inspect complete pump station and appurtenances for shipping damage or missing parts. Any damage or discrepancy shall be noted in written claim with shipper prior to accepting delivery. Validate all station serial numbers and parts lists with shipping documentation. Notify the manufacturer's representative of any unacceptable conditions noted with shipper.

3.2 INSTALLATION

A. Earth excavation and backfill are specified under site work, but are also to be done as a part of the work under this section, including any necessary sheeting and bracing.

B. The contractor shall be responsible for handling ground water to provide a firm, dry subgrade for the structure, and shall guard against flotation or other damage resulting from general water or flooding.

C. The grinder pump stations shall not be set into the excavation until the installation procedures and excavation have been approved by the engineer.

D. Remove packing material. User instructions MUST be given to the owner. Hardware supplied with the unit, if required, will be used at installation. The basin will be supplied with a standard 4" inlet grommet (4.50" OD) for connecting the incoming sewer line. Appropriate inlet piping must be used. The basin may not be dropped, rolled or laid on its side for any reason.

E. Installation shall be accomplished so that 1 inch to 4 inches of access way, below the bottom of the lid, extends above the finished grade line. The finished grade shall slope away from the unit. The diameter of the excavated hole must be large enough to allow for the concrete anchor.

F. A 6" inch (minimum) layer of naturally rounded aggregate, clean and free flowing, with particle size of not less than 1/8" or more than 3/4" shall be used as bedding material under each unit.

G. A concrete anti-flotation collar, as detailed on the drawings, and sized according to the manufacturer’s instructions, shall be required and shall be pre-cast to the grinder pump or poured in place. Each grinder pump station with its pre-cast anti-flotation collar shall have a minimum of three lifting eyes for loading and unloading purposes.

H. If the concrete is poured in place, the unit shall be leveled, and filled with water, to the bottom of the inlet, to help prevent the unit from shifting while the concrete is being poured. The concrete must be manually vibrated to ensure there are no voids. If it is necessary to pour the

concrete to a level higher than the inlet piping, an 8" sleeve is required over the inlet prior to the concrete being poured.

I. The contractor will provide and install a 4-foot piece of 4-inch SCH 40 PVC pipe with water tight cap, to stub-out the inlet for the property owners' installation contractor, as depicted on the contract drawings.

J. E/One requires that an E/One Uni-Lateral assembly (E/One part number NB0184PXX or NC0193GXX) or E/One Redundant Check Valve (E/One part number PC0051GXX) be installed in the pipe lateral outside the home between the pump discharge and the street main on all installations.

K. The electrical enclosure shall be furnished, installed and wired to the grinder pump station by the contractor. An alarm device is required on every installation, there shall be no exceptions. It will be the responsibility of the contractor and the engineer to coordinate with the individual property owner(s) to determine the optimum location for the alarm panel.

L. The contractor shall mount the alarm device in a conspicuous location, as per national and local codes. The alarm panel will be connected to the grinder pump station by a length and type of cable (in conduit per specification requirements) as required by the system supplier . The power and alarm circuits must be on separate power circuits. The grinder pump stations will be provided with 32 feet, 25 feet of useable, electrical supply cable to connect the station to the alarm panel. This cable shall be supplied with a factory installed EQD half to connect to the mating EQD half on the core.

M. The contractor shall install, level, align, and lubricate all equipment associated with the pump station as shown indicated on the project drawings, and as outlined in the O&M manual provided with the equipment. Installation must be in accordance with written instructions supplied by the manufacturer at time of delivery.

N. Check motor and control data plates for compatibility to site voltage. Install and test the station ground prior to connecting line voltage to station control panel.

O. Prior to applying electrical power to any motors or control equipment, check all wiring for tight connection. Verify that all protective devices (fuses and circuit breakers) conform to project design documents. Manually operate circuit breakers and switches to ensure operation without binding. Open all circuit breakers and disconnects before connecting utility power. Verify line voltage, phase sequence and ground before actual start-up.

P. The entire installation shall be provided in strict compliance with all applicable NEC and NFPA820 requirements for hazardous locations. The pump station supplier shall provide specific written direction to the installing contractor on the electrical installation provisions required for a fully-functional, code-compliant installation.

3.3 FIELD QUALITY CONTROL

A. Operational Test

1. Prior to acceptance by Owner, an operational test of all pumps, and control systems shall be conducted to verify that the installed equipment meets the purpose and intent of these

Specifications. Tests shall demonstrate that all equipment provided is electrically, mechanically, structurally, and otherwise acceptable; that it is safe and in optimum working condition; and that it conforms to the specified operating characteristics.

2. After construction debris and foreign material has been removed from the wet well, contractor shall supply clear water volume adequate to operate station through several pumping cycles. Observe and record operation of pumps, suction and discharge gage readings, ampere draw, pump controls, and liquid level controls. Check calibration of all instrumentation equipment, test manual control devices, and automatic control systems. Be alert to any undue noise, vibration or other operational problems.

B. Manufacturer's Start-up Services.

1. The manufacturer shall provide the services of qualified factory trained technician(s) who shall inspect the placement and wiring of each station, perform field tests as specified herein, and instruct the owner's personnel in the operation and maintenance of the equipment before the stations are accepted by the owner.
2. All equipment and materials necessary to perform testing shall be the responsibility of the installing contractor. This includes, as a minimum, a portable generator and power cable (if temporary power is required), water in each basin (filled to a depth sufficient to verify the high level alarm is operating), and opening of all valves in the system. These steps shall be completed prior to the qualified factory trained technician(s) arrival on site.
3. The services of a trained, factory-authorized technician shall be provided at a rate of 40 hours for every 100 grinder pump stations supplied.
4. Upon completion of the installation, the authorized factory technician(s) will perform the following test on each station:
   a. Make certain the discharge shut-off valve in the station is fully open.
   b. Turn ON the alarm power circuit and verify the alarm is functioning properly.
   c. Turn ON the pump power circuit. Initiate the pump operation to verify automatic "on/off" controls are operative. The pump should immediately turn ON.
   d. Consult the Manufacturer's Service Manual for detailed start-up procedures.

5. Upon completion of the start-up and testing, the manufacturer shall submit to the engineer the start-up authorization form describing the results of the tests performed for each grinder pump station. Final acceptance of the system will not occur until authorization forms have been received for each pump station installed and any installation deficiencies corrected.

3.4 CLEANING

A. Prior to acceptance, inspect interior and exterior of pump station for dirt, splashed material or damaged paint. Clean or repair accordingly. Remove from the job site all tools, surplus materials, scrap and debris.

3.5 PROTECTION

A. The pump station should be placed into service immediately upon completion of field startup. If operation is delayed, the station shall be stored and maintained per the manufacturer's written instructions until it is ready for use.

END OF SECTION 115000

SECTION 116000 – DUPLEX SUBMERSIBLE PUMP STATION

PART 1 - GENERAL FOR PUMP STATION No. 1

1.1 GENERAL REQUIREMENTS

A. The work required under this section includes, but is not limited to, furnishing all of the labor, materials, and equipment required to install, field test, and place into satisfactory operation the duplex pump station(s) as specified herein. Pumps and mechanical accessories shall be installed within the wet well as illustrated on the project Plans, and all duplex controls, valves, piping, pressure gauges, and control panels as shown and described on project drawings and specified herein.

B. The general provisions of the contract, including the General and Supplementary Conditions and General Requirements (if any) apply to the work specified in this section.

1.2 REFERENCES

A. Publications listed below form part of this specification to extent referenced in the text by basic designation only. Consult latest edition of publication unless otherwise noted.

1. American National Standards Institute (ANSI) and American Water Works Association (AWWA)

    a. ANSI B16.1 - Cast iron pipe flanges and flanged fittings
    b. ANSI/AWWA C115/A21.51 - Cast/ductile iron pipe with threaded flanges
    c. ANSI 253.1 - Safety Color Code for Marking Physical Hazards
    d. ANSI B40.1 - Gauges, Pressure and Vacuum
    e. AWWA C508 - Single Swing Check Valves
    f. AWWA C504 - Plug Valves

2. American Society for Testing and Materials (ASTM)

    a. ASTM A48 - Gray Iron Castings
    b. ASTM A126 - Valves, Flanges, and Pipe Fittings
    c. ASTM A307 - Carbon Steel Bolts and Studs
    d. ASTM F593 - Stainless Steel Bolts, Hex Cap Screws, and Studs
    e. ASTM A36 - Structural Steel

3. Institute of Electrical and Electronics Engineers (IEEE)

    a. ANSI/IEEE Std. 100 - Standard Dictionary of Electrical Terms
    b. ANSI/IEEE Std. 112 - Test Procedure for Polyphase Induction Motors
    c. IEEE Std. 242 - Protection of Industrial and Control Power Systems

4. National Electric Code (NEC), National Electrical Manufacturers Association (NEMA)

    a. NEC - National Electric Code
    b. NEC 701 - National Electric Code article 701
    c. NEMA Std. MG1 - Motors and Generators

5. Miscellaneous References

a. Ten-State Standards Recommended Standards for Sewage Works
b. Hydraulic Institute Standard for Centrifugal, Rotary and Reciprocating Pumps
c. NMTBA and JIC Std. National Machine Tool Builders Association & Joint Industrial Council Standards

1.3 SYSTEM DESCRIPTION

A. The contractor shall furnish and install automatically controlled submersible pumping station(s) with submersible pumps capable of handling raw unscreened sewage, sludge, and similar domestic liquids. Pump stations shall be installed in the locations shown on the Plans, and as specified herein.

B. The pumps and guide rail accessories shall be installed in the wet well as shown on the Plans. The pump control panel, liquid level control, valves, piping, and pressure gauges shall be installed within the wet well as illustrated on the project Plans, and all duplex controls, valves, piping, pressure gauges, and control panels as shown and described on project drawings and specified herein. Include separate Paragraphs for additional certifications.

C. The pump station design, materials of construction, pumps, valves and piping, and motor/electrical controls shall be manufactured and provided in strict accordance with the requirements as listed under PART 2 - PRODUCTS of this specification section

1.4 DESCRIPTION OF WORK REQUIRED

A. The extent of work required and requirements for the wastewater pumping station for this project are shown on the project drawings and described herein.

B. The work required at each wastewater pump station shall include, but is not limited to, the following:

1. Site grading, erosion control, weed control, construction of access roadway, gravel, and potable water service to the site as shown on the Plans.
2. Installation wastewater pumping stations as specified herein.
3. Piping required for each pump station, including all factory-furnished and installed piping, valves, fittings, Quick Discharge Connector, base elbow, submersible pumps, contractor-furnished piping and valves, stainless steel pump guide rails, and force main piping as specified herein, or as shown on the Plans.
4. Electrical work required for each pump station: main electrical service with utility meter and disconnect, station lighting as may be shown on the Plans, installation of an alarm light at each station, and all necessary conduit and wiring that may be required to provide power for proper installation and operation.
5. Pump station security fence as indicated on the Plans.
6. Finish work as required to complete the installation of the pump station: finish grading, erosion control, weed control, sod and/or grass seed, shrubbery, other landscaping indicated on the Plans.

C. The Contractor shall furnish and install, as shown on the Plans and specified herein, one automatic duplex submersible pump station. The station provided for this project shall comply with the detailed descriptions that follow.

1. The principal items of equipment to be provided with the pump station shall include two submersible centrifugal solids-handling pumps, each provided with a compatible Quick Discharge Connector system, guide rails, anchor bolts, stainless steel lifting chain with intermediate links and all associated hardware, a precast concrete wet well with top slab with integral aluminum wet well access cover, station valves, internal piping of the sizes indicated herein or on the Plans, precast valve pit and top slab with integral aluminum wet well access cover, and a complete factory-built

motor control center with circuit breakers, motor starters and automatic liquid level control system as specified herein to constitute a complete, working system.

2. Wet well: Factory fabricated from precast concrete.
3. Alternates proposed for use on this project shall be considered only if full and complete pre-submittal data for all proposed equipment is received no later than fourteen (14) calendar days prior to the bid date. Pre-submittal shall comply with the requirements of Section 1.06 below. The decision of the Engineer regarding the equality of any/all proposed alternates is final, and resubmittal of equipment will not be allowed.

D. Pumps and all mechanical accessories provided for each sewage pump station shall be installed in/on each wet well as indicated on the Plans and as outlined herein.

1. Pumping Station to be field fabricated, assembled, and tested with wet well for sewage pumps, collection of sanitary sewage and with sewage pumps and valve pit.
2. Wet well underground with valve pit underground with top 6" above finished grade as shown on the Drawings.
3. Wet well shall be factory fabricated from precast concrete.
4. The principal items of equipment to be provided with the pump station shall include two submersible centrifugal solids-handling pumps, each provided with a compatible Quick Discharge Connector system, guide rails, anchor bolts, stainless steel lifting chain with intermediate links and all associated hardware, a precast concrete wet well with top slab with integral aluminum wet well access cover, station valves, internal piping of the sizes indicated herein or on the Plans, precast valve pit and top slab with integral aluminum wet well access cover, and a complete factory-built motor control center with circuit breakers, motor starters and automatic liquid level control system as specified herein to constitute a complete, working system.

1.5 PERFORMANCE CRITERIA

A. Each pump shall be designed to handle raw, unscreened domestic sanitary sewage and pass up to a 3" spherical solid. Pumps shall be furnished with a minimum 4" discharge connection. Each pump shall be selected to provide the stated capacity and total dynamic head as noted elsewhere herein. Additional performance criteria can be found under the requirements of Section 2.06 B. herein.

B. Pressure Rating of Sewage Pumps and Discharge Piping Components: At least equal to sewage pump discharge pressure, but not less than 125 psig.

C. Pressure Rating of Other Piping Components: At least equal to system operating pressure.

D. Site power furnished to pump station shall be 240/3/60VAC 4-wire electrical service, maintained within industry standards. The available fault current provided at the pump station control panel is 30kA RMS symmetrical. Voltage tolerance shall be plus or minus 10 percent. Phase-to-phase unbalance shall not exceed 1% average voltage as set forth in NEMA standard MG-1. Control voltage shall not exceed 120 volts.

1.6 SUBMITTALS

A. Product Data

1. Include rated capacities; shipping, installed, and operating weights; furnished specialties; and accessories. Generic or non-specific submittals will not be considered acceptable and will be rejected.
2. Submittal shall include shop drawings, electrical ladder logic drawings, and support data as follows: Catalog cuts sheets reflecting characteristics for major items of equipment, materials of

construction, major dimensions, motor data, pump characteristic curves to illustrate the design duty point capacity (GPM), head (FT), pump efficiency (n_p), and brake horsepower (BHP). Electrical components used in the motor branch and liquid level control shall be fully described.

B. Shop Drawings

1. Provide layout of mechanical equipment and anchor bolt locations for the Quick Discharge Connector, base elbow, and guide rail components. Pipe penetrations and station access clearances shall be dimensioned relative to the station centerline. Electrical ladder logic drawings shall illustrate motor branch and liquid level control circuits to the extent necessary to validate function and integration of circuits to form a complete working system.
2. Show fabrication and installation details for each pumping station. Detail equipment assemblies and indicate dimensions, weights, loads, required clearances, method of field assembly, components, and location and size of each field connection.
   a. Wiring Diagrams: Power, signal, and control wiring.
   b. Control Panel: Complete schematic diagrams and drawings showing the equipment to be provided and dimensions for the same.
   c. Refer to Specification Section 262900 ("Manufactured Control Panels") for additional requirements.

C. Operation & Maintenance Manuals

1. Comprehensive instructions supplied at time of shipment shall enable personnel to properly install, operate, and maintain all equipment supplied. Content and instructions shall assume operations personnel are familiar with pumps, motors, piping and valves, but lack experience on the exact equipment supplied.
2. All Operation & Maintenance manuals shall be specific to the actual equipment supplied in accordance with this specification. Instruction manuals applicable to many different pump configurations, and which require the operator to selectively read various portions of the manual shall not be acceptable.
3. Documentation shall be specific to the equipment installed and collated in functional sections. Each section shall combine to form a complete system manual covering all aspects of equipment supplied by the manufacturer. Support data for any equipment supplied, even if mounted or included in overall station design, shall be provided by those supplying the equipment and a separate section shall be so designated in the O&M Manual. Instructions shall include the following as a minimum:

   a. Functional description of each major component, complete with operating instructions.
   b. Instructions for operating pumps and pump controls in all modes of operation.
   c. Calibration and adjustment of equipment for initial equipment start-up, replacement of level control components, or as may be required for routine maintenance.
   d. Support data for commercially available components not produced by the manufacturer, but supplied in accordance with the Specifications, shall be supported by literature from the prime manufacturer and incorporated as appendices.
   e. Electrical schematic diagram of the pump station circuits shall be in accordance with NFPA70. Schematics shall illustrate, to the extent of authorized repair, pump motor branch, control and alarm system circuits including interconnections. Wire numbers and legend symbols shall be shown. Schematic diagrams for individual components, not normally repairable by the station operator, need not be included. Details for such parts shall not be substituted for an overall system schematic. Partial schematics, block diagrams, and simplified schematics shall not be provided in lieu of an overall system diagram.
   f. Mechanical layout drawing of the pump station and components, prepared in accordance with good commercial practice, shall provide installation dimensions and location of all pumps, valves and piping.

4. Operation and maintenance instructions that rely on vendor cut-sheets and literature that includes general configurations, or requires operations personnel to selectively read portions of the manual shall not be acceptable. Operation and maintenance instructions must be specific to equipment supplied in accordance with these Specifications.

1.7 QUALITY ASSURANCE

A. Upon request from the Engineer (or Owner), the manufacturer shall prove financial stability long-term performance and the ability to produce the specified product within the specified delivery schedules. At the request of the Engineer (or Owner) the manufacturer shall provide evidence of the facilities, inventory, equipment and expertise that demonstrates the manufacturer's commitment to long-term customer service and product support. Such evidence shall be demonstrated exclusively by a visit to the pump station manufacturer's facility by the Engineer (or Owner).

B. The manufacturer must show proof of original product design and testing. Products violating intellectual property regulations shall not be allowed, as they may violate international law and expose the user or Engineer to unintended liabilities. "Reverse-engineered" products fabricated to substantially duplicate the design of an original product shall not be allowed, as they may contain substantial differences in tolerances and material applications addressed in the original design, which may contribute to product failure.

C. The manufacturer must show that the basic pump station design configuration and equipment used in the pump station is a standard product and has been factory tested, and shall be marketed as all components to be supplied having been assembled, operated, and tested to meet the requirements of these Specifications.

D. The term "pump manufacturer" or "pump station manufacturer" shall be defined as the entity which designs, fabricates, machines, assembles, hydraulically tests, and warrants the final product. Any entity that does not meet this definition will not be considered a "pump manufacturer" or "pump station manufacturer" and is not an acceptable supplier. For quality control reasons and to ensure future pump and parts availability, all major components of the pumps provided shall be readily available from the manufacturer's regular inventory in the United States of America.

E. All pump openings and passages shall be of adequate size to pass 3" diameter spheres (minimum) and any trash or stringy material that can pass through an average house collection system.

F. The manufacturer's technical representative shall inspect the completed installation, correct or supervise the correction of any defect or malfunction, and instruct operating personnel in the proper operation and maintenance of the equipment as described in Part 3 – EXECUTION of this specification section.

G. Upon request from the Engineer, the equipment manufacturer shall document the existence of a *factory-authorized* service and repair facility within a reasonable distance of the job site prior to bidding the specified pump station.

H. Electrical Components, Devices, and Accessories: Listed and labeled as defined in NFPA 70, Article 100, by testing agency acceptable to authorities having jurisdiction, marked for intended use, and manufactured in strict accordance with the National Electric Code.

1.8 MANUFACTURER'S EXPERIENCE REQUIREMENTS

A. It is the specific intention of these Specifications that the wastewater pump station provided for this project be provided by a manufacturer with documented experience in the design, production, and successful installation of units required for this project.

1. The station manufacturer shall have a minimum of twenty (20) calendar years of experience in the production of submersible sewage pumps and related equipment, and shall have the facilities and personnel in place to provide support of the specified units described herein.
2. Upon request, the pump manufacturer shall document the existence of no less than ten (10) installations of the exact specified equipment that has been successfully installed and is in full-time service. All reference stations provided shall be of the exact design and type as the equipment that is specified herein, with only motor horsepower or means of level control varying between the referenced installations and those specified herein.
3. The pump manufacturer shall maintain adequate levels of inventory to be able to provide replacement parts for pumps, including major components such as impellers, casings, and motors, directly from normal stock. Proof of inventory at the pump station manufacturer's normal place of business may be required prior to approval of any submittal data. Proof of inventory shall be confirmed by a visit to the manufacturer's facility, with the cost of the visit to be borne by the pump station manufacturer. Costs for this trip, if required, shall include transportation, lodging, and all meals for not less than six (6) representatives of the municipality and/or the consulting engineer.

B. No consideration will be given to any equipment manufacturer who cannot comply with all of the requirements stated in Sections 1.05, 1.07, and 1.08.

1.9 MANUFACTURER'S WARRANTY

A. The manufacturer shall warrant all equipment provided to be of quality construction, free of defects in material and workmanship. A written warranty shall include specific details described below:

1. Manufacturer's standard form in which manufacturer agrees to repair or replace components of packaged pumping stations that fail in materials or workmanship within specified warranty period.
2. Warranty Period of one year from date of Final Acceptance, except for items specifically noted otherwise.

B. Components that fail to perform as specified by the Engineer, or as represented by the manufacturer, or as proven defective in service during the warranty period, shall be replaced, repaired, or satisfactorily modified by the manufacturer.

PART 2 - PRODUCTS

2.1 MANUFACTURER

A. In other Part 2 articles where subparagraph titles below introduce lists, the following requirements apply for product selection:
1. Available Manufacturers: Subject to compliance with requirements, equipment manufacturers offering products that may be incorporated into the Work include, but are not limited to, the manufacturers specified.
2. Manufacturers: Subject to compliance with requirements, provide products by the manufacturers specified.

B. After execution of the contract, the contractor may offer substitutions to the specified equipment for consideration. The equipment proposed for substitution must be in compliance with Section 1.04.C.3, superior in construction and performance to that specified in the contract, and the higher quality must be demonstrated by a list of current users of the proposed equipment in similar installations.

C. In event the contractor obtains Engineer's approval for equipment substitution, the contractor shall, at his own expense, make all resulting changes to the enclosures, buildings, piping or electrical systems as required to accommodate the proposed equipment. Revised detail drawings illustrating the substituted equipment shall be submitted to the Engineer prior to acceptance.

D. It will be assumed that the contractor's cost for the alternate equipment proposed is less for the proposed substitution, and if approved, the contract price shall be reduced by an amount equal to the savings.

2.2 EQUIPMENT

A. The contractor is responsible for supplying all materials and equipment used on this project. The Contractor is responsible for coordination of delivery, unloading, handling, storage, installation, testing, startup, and all ancillary equipment as if the equipment were supplied by the Contractor.

B. The Scope of Supply for equipment to be furnished is as follows:

1. *Two* *Wastewater Pumps* – Flygt NP 3085 submersible sewage pumps, each to be rated to deliver 114 GPM @ 52' TDH, and driven by approximately 4 HP, 3415 RPM motor suitable for operation on 240/3/60 electrical service. Accessories to be provided with each pump shall include the following, for installation by others as shown on the Plans or as detailed in the submittal data to follow:

- 4" QDC (quick discharge connector) base elbow to 4" piping
- S.S. anchor bolts
- 50' electric power cable
- 30' S. S. lifting chain with intermediate tie-off links
- upper and intermediate S.S. guide bar brackets
- 2" S.S. guide rails.
- certified performance testing, with results provided for approval
- spare parts required - seal kits
- S.S. hanger for chains, floats, and power leads with S.S sinch holders.

One *Control Panel* –NEMA 4X S.S. enclosure, duplex control panel for the above also suitable for operation with 240/3/60 electrical service. Refer to Specification Section 262900 ("Manufactured Control Panels") for additional requirements. The panel will be provided with NEMA-rated FVNR motor starters, circuit breakers, and overload protection as required by the application, as documented in Part 2.9 below.

Refer to Electrical Plans for detailed Wetwell Junction Box requirements. All pump and sensor cables will be routed to this box without cutting, as shown on the Plans.

One *Wet Well Access Cover* – 3' x 4-6' aluminum double-door access cover, for installation in the wet well top slab. The cover shall be rated for 300 PSF live load, and shall include stainless steel hardware, lifting assists for each leaf, slam lock, and other accessories as specified.

One *Valve Vault Access Cover* – 4' x 6' aluminum double-door access cover, for installation in the valve vault top slab. The cover shall be rated for 300 PSF live load, and shall include stainless steel hardware, lifting assists for each leaf, slam lock, and other accessories as specified.

C. The pump station shall be equipped with dual pressure gauges to monitor discharge pressures of each pump. Pressure gauges shall be isolated from the wastewater by the use of neoprene isolator rings to ensure accurate, repeatable readings with no possibility of compromising gauge function. Gauges shall be a minimum of 6 inches in diameter, and shall be graduated in feet water column. Rated accuracy shall be 1 percent of full scale reading. Pressure gauge shall be graduated 0 to 140 feet water column minimum. Gauge kit shall be board mounted and complete with all stainless steel hoses and stainless steel fittings as specified in Section 2.09.F.

1. Under no circumstances shall the pressure gauges, connecting piping, or isolator rings be exposed to raw sewage. Only suitable oil shall be used in the gauge and sensing piping.

D. If the station wet well depth exceeds twenty (20) feet in depth, each pump shall be furnished with a 304 stainless steel intermediate guide rail bracket to provide the correct guide rail splicing and support.

2.3 PUMP DESIGN

A. Requirements

1. Furnish and install two (2) submersible non-clog wastewater pumps. Each pump shall be equipped with a 4 HP, submersible electric motor connected for operation on 240 volts, 3 phase, 60 hertz, 4 wire service, with 50 feet of submersible cable (SUBCAB) suitable for submersible pump applications. The power cable shall be sized according to NEC and ICEA standards and also meet with P-MSHA Approval.

B. Pump Design Configuration

1. The pump shall be supplied with a mating cast iron 3 inch discharge connection and be capable of delivering 114 GPM at 52 FT. TDH. An additional point on the same curve shall be 200 GPM at 35 feet total head. Shut off head shall be 78 feet (minimum). The pump(s) shall be automatically and firmly connected to the discharge connection, guided by no less than two guide bars extending from the top of the station to the discharge connection. There shall be no need for personnel to enter the wet-well. Sealing of the pumping unit to the discharge connection shall be accomplished by a machined metal to metal watertight contact. Sealing of the discharge interface with a diaphragm, O-ring or profile gasket will not be acceptable. No portion of the pump shall bear directly on the sump floor. Each pump shall be fitted with 20 feet of stainless steel lifting chain or stainless steel cable. The working load of the lifting system shall be 50% greater than the pump unit weight.

C. Pump Construction

1. Major pump components shall be of grey cast iron, ASTM A-48, Class 35B, with smooth surfaces devoid of blow holes or other irregularities. The lifting handle shall be of stainless steel. All exposed nuts or bolts shall be AISI type 316 stainless steel construction. All metal surfaces coming into contact with the pumpage, other than stainless steel or brass, shall be protected by a factory applied spray coating of acrylic dispersion zinc phosphate primer with a polyester resin paint finish on the exterior of the pump.
2. Sealing design shall incorporate **metal-to-metal contact** between machined surfaces. Critical mating surfaces where watertight sealing is required shall be machined and fitted with Nitrile or optional Viton rubber O-rings. Fittings will be the result of controlled compression of rubber O-rings in two planes and O-ring contact of four sides without the requirement of a specific torque limit.

D. Cooling System

1. Motors are sufficiently cooled by the surrounding environment or pumped media. A water cooling jacket is not required.

E. Cable Entry Seal

1. The cable entry seal design shall preclude specific torque requirements to insure a watertight and submersible seal. The cable entry shall consist of a single cylindrical elastomer grommet, flanked by washers, all having a close tolerance fit against the cable outside diameter and the entry inside diameter and compressed by the body containing a strain relief function, separate from the function of sealing the cable. The assembly shall provide ease of changing the cable when necessary using the same entry seal.

F. Motor

1. The pump motor shall be a NEMA B design, induction type with a squirrel cage rotor, shell type design, housed in an air filled, watertight chamber. The stator windings shall be insulated with moisture resistant Class H insulation rated for 180°C (356°F). The stator shall be insulated by the trickle impregnation method using Class H monomer-free polyester resin resulting in a winding fill factor of at least 95%. The motor shall be inverter duty rated in accordance with NEMA MG1, Part 31.The stator shall be heat-shrink fitted into the cast iron stator housing. The use of multiple step dip and bake-type stator insulation process is not acceptable. The use of bolts, pins or other fastening devices requiring penetration of the stator housing is not acceptable. The motor shall be designed for continuous duty handling pumped media of 40°C (104°F) and capable of no less than 30 evenly spaced starts per hour. The rotor bars and short circuit rings shall be made of cast aluminum. Thermal switches set to open at 125°C (260°F) shall be embedded in the stator end coils to monitor the temperature of each phase winding. These thermal switches shall be used in conjunction with and supplemental to external motor overload protection and shall be connected to the control panel. The motor and the pump shall be produced by the same manufacturer.
2. The combined service factor (combined effect of voltage, frequency and specific gravity) shall be a minimum of 1.15. The motor shall have a voltage tolerance of plus or minus 10%. The motor shall be designed for operation up to 40°C (104°F) ambient and with a temperature rise not to exceed 80°C. A performance chart shall be provided upon request showing curves for torque, current, power factor, input/output kW and efficiency. This chart shall also include data on starting and no-load characteristics. The motor horsepower shall be adequate so that the pump is non-overloading throughout the entire pump performance curve from shut-off through run-out.
3. The motor shall be capable of continuous submergence underwater without loss of watertight integrity to a depth of 65 feet or greater.
4. The power cable shall be sized according to the NEC and ICEA standards and shall be of sufficient length to reach the junction box without the need of any splices. The outer jacket of the cable shall be oil resistant chlorinated polyethylene rubber. The cable shall be capable of continuous submergence underwater without loss of watertight integrity to a depth of 65 feet or greater.

G. Bearings

1. The pump shaft shall rotate on two bearings. Motor bearings shall be permanently grease lubricated. The upper bearing shall be a single deep groove ball bearing. The lower bearing shall be a two row angular contact bearing to compensate for axial thrust and radial forces. **Single row lower bearings are not acceptable.** The minimum L_{10} bearing life shall be 50,000 hours at any usable portion of the pump curve.

H. Mechanical Seal

1. Each pump shall be provided with a tandem mechanical shaft seal system consisting of two totally independent seal assemblies. The seals shall operate in a lubricant reservoir that hydro-dynamically lubricates the lapped seal faces at a constant rate. The lower, primary seal unit, located between the pump and the lubricant chamber, shall contain one stationary and one

positively driven rotating, corrosion and abrasion resistant **tungsten-carbide** ring. The upper, secondary seal unit, located between the lubricant chamber and the motor housing, shall contain one stationary and one positively driven rotating, corrosion and abrasion resistant tungsten-carbide seal ring.

2. Each seal interface shall be held in contact by its own spring system. The seals shall require neither maintenance nor adjustment nor **depend on direction of rotation for sealing**. The position of both mechanical seals shall depend on the shaft. Mounting of the lower mechanical seal on the impeller hub will not be acceptable. For special applications, other seal face materials shall be available.
3. **The following seal types shall not be considered acceptable or equal to the dual independent seal specified:** shaft seals without positively driven rotating members, or conventional double mechanical seals containing either a common single or double spring acting between the upper and lower seal faces. No system requiring a pressure differential to offset pressure and to effect sealing shall be used.
4. Each pump shall be provided with a lubricant chamber for the shaft sealing system. The lubricant chamber shall be designed to prevent overfilling and to provide lubricant expansion capacity. The drain and inspection plug, with positive anti-leak seal shall be easily accessible from the outside. The seal system shall not rely upon the pumped media for lubrication. **The motor shall be able to operate dry without damage while pumping under load**.
5. Where a seal cavity is present in the seal chamber, the area about the exterior of the lower mechanical seal in the cast iron housing shall have cast in an integral concentric spiral groove. This groove shall protect the seals by causing abrasive particulate entering the seal cavity to be forced out away from the seal due to centrifugal action.
6. Seal lubricant shall be FDA Approved, nontoxic.

I. Pump Shaft

1. Pump and motor shaft shall be the same unit. The pump shaft is an extension of the motor shaft. Couplings shall not be acceptable. The pump shaft shall be stainless steel – ASTM A479 S43100-T.
2. If a shaft material of lower quality than stainless steel – ASTM A479 S43100-T is used, a shaft sleeve of stainless steel – ASTM A479 S43100-T is used to protect the shaft material. However, shaft sleeves only protect the shaft around the lower mechanical seal. No protection is provided in the lubricant housing and above. Therefore, the use of stainless steel sleeves will not be considered equal to stainless steel shafts.

J. Impellar

1. The impeller shall be of grey cast iron, Class 35B. Select impellers shall be available in Hard-Iron™ (ASTM A-532 (Alloy III A) 25% chrome cast iron), dynamically balanced, semi-open, multi-vane, back-swept, non-clog design. The impeller vane leading edges shall be mechanically self-cleaned upon each rotation as they pass across a spiral groove located on the volute bottom. The internal volute bottom shall provide effective sealing between the pump volute and the multi-vane, semi-open impeller. The sharp spiral groove(s) shall provide the shearing edge(s) across which each impeller vane leading edge shall cross during its rotation in order to remain unobstructed. The clearance between the internal volute bottom and the impeller leading edges shall be adjustable.
2. The grey iron impeller vanes shall have screw-shaped leading edges that are hardened to Rc 45, Hard-Iron™ impellers hardened to Rc 60 and shall be capable of handling solids, fibrous materials, heavy sludge and other matter found in waste water. The screw shape of the impeller inlet shall provide an inducing effect for the handling of sludge and rag-laden wastewater. Impellers shall be locked to the shaft and held by an impeller bolt.

K. Volute/Suction Cover

1. The pump volute shall be a single piece grey cast iron, ASTM A-48, Class 35B, non-concentric design with smooth passages of sufficient size to pass any solids that may enter the impeller. Minimum inlet and discharge size shall be as specified. The volute shall have a replaceable suction

cover insert ring in which are cast spiral-shaped, sharp-edged groove(s). The spiral groove(s) shall provide trash release pathways and sharp edge(s) across which each impeller vane leading edge shall cross during rotation so to remain unobstructed. The insert ring shall be cast of grey cast iron, Class 35B, or Hard-Iron™ (ASTM A-532 (Alloy III A) 25% chrome cast iron) when used with Hard-Iron™ impellers and provide effective sealing between the multi-vane semi-open impeller and the volute housing.

L. Protection

1. All stators shall incorporate thermal switches in series to monitor the temperature of each phase winding. The thermal switches shall open at 125°C (260°F), stop the motor and activate an alarm.
2. A leakage sensor shall be available as an option to detect water in the stator chamber. The Float Leakage Sensor (FLS) is a small float switch used to detect the presence of water in the stator chamber. When activated, the FLS will stop the motor and send an alarm both local and/or remote. **USE OF VOLTAGE SENSITIVE SOLID STATE SENSORS AND TRIP TEMPERATURE ABOVE 125°C (260°F) SHALL NOT BE ALLOWED.**
3. The thermal switches and FLS shall be connected to a Mini CAS (Control and Status) monitoring unit. The Mini CAS shall be designed to be mounted in any control panel.

2.4 AUTOMATIC QUICK DISCHARGE CONNECTION

A. Each pump shall be furnished with a submersible discharge connection system to permit removal and installation of the pump without the necessity of an operator entering the wet well. The design must insure an automatic and firm connection of the pump to the discharge piping when lowered into place. The connection shall be metal-to-metal without the use of gaskets, O-rings, or grommets.

B. The QDC shall be ASTM A48, Class 30 iron with integral guide rail pilots and shall be provided with all hardware and anchor bolts required for permanent installation to the wet well floor. The base plate shall be designed with an integral 90^0 elbow for connection to the vertical discharge piping utilizing standard ANSI 125 lbs. flanges. The base plate shall be coated with an epoxy coating for corrosion resistance. The manufacturer shall provide all necessary drawings to insure proper installation and alignment of baseplate within the wet well.

C. Each pump shall be provided with a replaceable ASTM A48, Class 30 iron slide guide attached to pump discharge flange. The connection between the slide guide and the base shall be solely through metal-to-metal contact between the guide and the QDC elbow. Systems that require the use of gaskets, O-rings, elastomer seals, or grommets shall not be acceptable.

1. The slide guide shall direct the pump down two vertical guide rails and onto the discharge connection in a simple lineal movement. The slide guide shall be designed to transmit full weight of the pump to the base (QDC) flange.
2. No portion of the pump shall rest directly on the bottom of the wet well or be supported by the guide rails, or lifting cable (chain). The presence of sludge and grease on guide rails shall not hinder removal of the pump during the lifting operation.

D. The contractor shall provide two lengths of Schedule 40 304L stainless steel guide rail pipes for each pump. Guide rails shall be unspliced (unless the wet well depth exceeds twenty feet – see Section 2.05.D above), and rail size (diameter) shall be as specified by the pump manufacturer.

E. Upper (and intermediate, if required) guide rail brackets, and a lifting cable or chain shall be furnished for each pump. Guide rails shall be plumb, attached to the pump base (QDC) at the bottom and the guide rail brackets as described above. Upper and intermediate guide rail brackets shall be 304 S.S.

F. Lifting cable or chain shall be 304 S.S., permanently attached to the lifting bail of each pump. Excess length necessary to utilize the hoist (if specified herein) shall be secured to the upper guide rail bracket in the wet well. When lifting chain is used, large intermediate lifting links shall be provided every 3-5' along the length of the chain to facilitate use. If lifting cable is provided, a crimped ball end shall be provided at the upper end of each cable for attaching to the lifting hoist drum.

G. All bolts, machine screws, nuts, washers, and lock washers for complete assembly of access cover, guide rail assembly, discharge elbow (QDC), and discharge piping shall be 304 stainless steel.

2.5 ACCESS COVERS

A. Wet Well Access

1. The wet well access cover shall be fabricated from welded aluminum sections. A hinged aluminum door shall be provided for each pump. The hinged door shall be fabricated from 1/4" thick aluminum with non-skid diamond tread on upper surface. All hardware on access assembly shall be stainless steel with a flush upper surface without protrusions. For safety, the door shall have a 300psf rating and be fitted with a recessed staple for padlock. Door shall be furnished with a flush aluminum drop handle and automatic hold open arm.

    a. The access cover shall be provided with an aluminum frame, which shall be cast into the polymer top slab described above. Under no circumstances shall access cover leaves simply be bolted to a concrete base without a full support frame that is cast into the concrete.

2. Safety grating shall be provided to protect personnel from falling into the wet well when the access doors are open. The fall-through protection system shall be a grate consisting of two leafs made of 6061-T6 aluminum hinged on the same side of the hatch. The safety grating system shall be directly attached to the aluminum access cover frame (not bolted to the underside of the concrete base), and shall be designed to provide continuous safety assurance in both closed and open positions.

    a. When closed, the grate shall allow visibility for inspections and performance of limited maintenance below it. When open, the grate shall act as an additional barrier to the access door opening.
    b. Safety grating shall be designed to withstand a minimum pedestrian load of 300 lbs. per square foot. The grate openings shall be 3’ x 4’-6” to allow both visual inspection and limited access for maintenance purposes when the grate is closed.
    c. Each leaf of the safety grating will pivot on aluminum hinge devices with 316 S.S. hardware that shall permit them to rotate upward 90 degrees and automatically lock in place. Aluminum pull rods will be attached to the each grate leaf so the operator is positioned with the grate between him and the hatch’s opening whenever he raises a leaf. Each grate leaf will have a rod made from 316 S.S. that automatically engages to secure the leaf in its open position, and can be lifted upward to permit the grate leaf to close. The hatch cover will not be able to shut until the grate is closed, thereby ensuring the grate is in position when the next operator opens the hatch cover.

    d. The grate shall have an OSHA safety orange finish to increase visual awareness of the safety hazard. All hardware components shall be 316 S.S. to withstand corrosive wastewater environments. Safety grating shall be affixed only to the access cover frame, and not to the concrete top slab. The use of flexible safety netting is not considered a satisfactory alternative to the specified safety grating.

B. Valve Pit Access

1. The valve pit access cover shall be fabricated from welded aluminum sections. A hinged aluminum door shall be provided for each pump. The hinged door shall be fabricated from 1/4" thick aluminum with non-skid diamond tread on upper surface. All hardware on access assembly shall be stainless steel with a flush upper surface without protrusions. For safety, the door shall have a 300psf rating and be fitted with a recessed staple for padlock. Door shall be furnished with a flush aluminum drop handle and automatic hold open arm.

   a. The access cover shall be provided with an aluminum frame, which shall be cast into the polymer top slab described above. Under no circumstances shall access cover leaves simply be bolted to a concrete base without a full support frame that is cast into the concrete.

2. Safety grating shall be provided to protect personnel from falling into the wet well when the access doors are open. The fall-through protection system shall be a grate consisting of two leafs made of 6061-T6 aluminum hinged on the same side of the hatch. The safety grating system shall be directly attached to the aluminum access cover frame (not bolted to the underside of the concrete base), and shall be designed to provide continuous safety assurance in both closed and open positions.

   a. When closed, the grate shall allow visibility for inspections and performance of limited maintenance below it. When open, the grate shall act as an additional barrier to the access door opening.
   b. Safety grating shall be designed to withstand a minimum pedestrian load of 300 lbs. per square foot. The grate openings shall be 4’ x 6’ to allow both visual inspection and limited access for maintenance purposes when the grate is closed.
   c. Each leaf of the safety grating will pivot on aluminum hinge devices with 316 S.S. hardware that shall permit them to rotate upward 90 degrees and automatically lock in place. Aluminum pull rods will be attached to the each grate leaf so the operator is positioned with the grate between him and the hatch’s opening whenever he raises a leaf. Each grate leaf will have a rod made from 316 S.S. that automatically engages to secure the leaf in its open position, and can be lifted upward to permit the grate leaf to close. The hatch cover will not be able to shut until the grate is closed, thereby ensuring the grate is in position when the next operator opens the hatch cover.

   d. The grate shall have an OSHA safety orange finish to increase visual awareness of the safety hazard. All hardware components shall be 316 S.S. to withstand corrosive wastewater environments. Safety grating shall be affixed only to the access cover frame, and not to the concrete top slab. The use of flexible safety netting is not considered a satisfactory alternative to the specified safety grating.

2.6 STATION VALVES AND PIPING

A. Each pump shall be equipped with a full flow type check valve capable of passing a 3" spherical solid. Valve shall be constructed with ANSI flanged ends and fitted with a weighted external lever. Valve seat shall be constructed of stainless steel, secured to the body to ensure concentricity, sealed by an O-ring, and shall be replaceable. The valve body shall be cast iron incorporating a clean-out port large enough to allow removal and/or replacement of the valve clapper without removing valve or piping from the line. Valve clapper shall have a molded neoprene seating surface incorporating low pressure sealing rings.

Valve hinge pin and internal hinge arm shall be stainless steel supported on each end in brass bushings. Shaft nut shall have double O-rings which shall be shall be easily replaceable without requiring access to interior of valve body.

1. All internal hardware shall be stainless steel. Valve shall be rated at 175 PSI working pressure, 350 PSI hydrostatic test pressure. Valves other than full flow type or valves mounted in such a manner that prevents the passage of a 3" spherical solid shall not be acceptable.
2. Check valves shall be a regular production item that are commercially available from a variety of sources. Specially-constructed check valves that are specific to a particular brand of packaged pumping station and are only available from the station manufacturer are not acceptable.

B. Each discharge line shall be equipped with a 2-way plug valve to permit isolation of the pumps from the common discharge header. The plug valve shall be non-lubricated type. Valve body shall be cast iron with flanged end connections drilled to ANSI 125 pound standard. Valve shall be furnished with a drip-tight shutoff plug mounted in stainless steel bearings, and shall have a resilient facing bonded to the sealing surface. Valves shall have ports designed to pass 3" spherical solids.

C. Flanged header pipe shall be centrifugally cast, ductile iron, complying with the requirements of ANSI/AWWA A21.51/C115 and Class 53 thickness. Flanges shall be cast iron Class 125, and shall comply with ANSI B16.1. Pipe and flanges shall be threaded and suitable thread sealant applied before assembling flange to pipe. Bolt holes shall be in angular alignment within ½° between flanges. Flanges shall be faced and a gasket finish applied. All pipes connected to the pump station shall be supported according to good commercial practice.

D. The station shall be provided with an integral discharge bypass piping arrangement to allow the operator to connect an external emergency pump in the event of a power and/or station failure. The station header pipe shall incorporate a 2-way plug valve to permit emergency access to the pump station force main after isolation of the pumps. The plug valve shall be non-lubricated, tapered type. Valve body shall be cast iron with flanged end connections drilled to 125 pound standard. Valve shall be furnished with a drip-tight shutoff plug mounted in stainless steel bearings, and shall have a resilient facing bonded to the sealing surface. The header pipe shall penetrate the station sidewall and terminate with a 4" male OPW type quick connect fitting.

E. Separate pressure gauges shall be provided for each pump, and shall be protected from the pumped media by means of isolator rings to assure accurate, repeatable pressure readings without compromising gauge function. Any pressure gauge design that allows raw sewage or sludge to contact the internals of the pressure gauge is not considered acceptable and will not be allowed.

1. The isolator ring shall incorporate a flexible rubber (Viton®) sleeve designed to measure line pressure throughout the full 360° circumference of the pipe inner diameter. The inside diameter of the isolator ring shall match that of the pipe to assure smooth, unobstructed flow, self-cleaning operation, and minimize turbulence and friction. Isolator ring body shall be fabricated of carbon steel. End plates shall be acetyl homo polymer and the elastomeric sleeve shall be Viton®.
2. Isolator rings shall be of the same diameter as the specified station piping, and shall fit inside the bolt circle of 125# ANSI flanges. Face to face length of the isolator ring shall conform to specification MSS-SP67. The center section shall have a cavity behind the rubber sleeve filled with a high viscosity food grade silicone fluid to transfer pressure to the gauge. The isolator system shall dampen out surges or pressure spikes and eliminate gauge fluctuations without the need for a separate snubber. All pressure instruments attached to the sensor shall be rigidly supported by a post at least 0.875 inches diameter welded to the isolator. Isolator rings with more than one instrument, shall have minimum 1/2" NPT connections; 1/4" NPT fittings are not acceptable.
3. Isolator rings shall be vacuum-filled and permanently sealed at the factory using a high viscosity food grade silicone fluid with a modular seal consisting of a rubber membrane and needle fitting to allow removal and replacement of pressure instruments without compromising the vacuum fill.

The needle fitting shall have both 1/4" NPT(F) thread and 1/2 NPT(M) threads. Pressure isolator shall be capable of operating under pressure with all instruments removed with no loss of fill fluid, without isolating valves.

4. Pressure instruments shall be attached to the isolator with a hand tightened lock ring. Maximum operating pressure without leakage shall be 1,000 psi. In addition, all gauges and/or instrumentation shall be prefilled at the factory with high viscosity food grade silicone fluid and supplied with a fitting that shall allow them to be installed and/or replaced in the field without the need for vacuum filling. The system shall be designed to allow field replacement of gauges without service interruption or process spills. No isolation valves shall be required. No tools shall be required to change pressure gauges and/or instruments. Isolator rings with a fill plugs that can be removed with the resultant loss of fluid shall not be acceptable. Standard tapped single point connections or diaphragm seals vulnerable to plugging by debris or deposits shall not be acceptable.

2.7 SUPPORTS AND THRUST BLOCKS

A. All piping connected to the pump station shall be supported in accordance with good commercial practice. The control panel, control power transformer, and discharge pressure gauge shall be mounted on a supporting framework of fabricated steel. The support frame shall be drilled to accept all equipment, and shall be constructed entirely of fabricated steel angle shapes.

2.8 FINISH

A. All above ground station piping, control panel, and exposed steel framework shall be cleaned with industrial grade chemical cleaner. The prime coat shall be zinc-based synthetic primer. The finish coat shall be a high performance protective enamel coating.

2.9 ELECTRICAL CONTROLS

A. A complete pump control system shall be provided as a part of the factory-built pump station assembly. The pump station control panel shall be tested as an integral unit by the pump station manufacturer.

B. Refer to Specification Section 262900 (“Manufactured Control Panels”) for additional requirements.

C. The electrical control equipment shall be mounted within the NEMA 4X stainless steel pump control panel described above. The enclosure door shall be hinged and sealed with a neoprene gasket. It shall include a removable plated steel back panel on which control components shall be mounted. Back panel shall be secured to enclosure with collar studs. Operator controls shall be mounted on the enclosure door. The control enclosure shall be mounted within the fiberglass station enclosure. The control panel will be equipped with vapor emission type corrosion inhibitors.

D. All control components shall be securely fastened to a removable back panel with screws and lock washers. Switches, indicators and instruments shall be mounted through the control panel door. All control devices and instruments shall be secured to the sub-plate with machine screws and lock washers. Mounting holes shall be drilled/tapped, and self-tapping screws shall not be used to mount any components. All connections from the back panel to door mounted or remote devices shall be made through terminal blocks. All control devices shall be clearly labeled to indicate function.

E. A main terminal block and ground bar shall be furnished for field connection of the incoming electrical supply. The connections shall be designed to accept copper conductors of sufficient size to serve anticipated pump station loads. Main terminal block shall be mounted to allow incoming wire bending space in accordance with Article 373 of the National Electrical Code (NEC).

F. Pump station controls shall conform to third party safety certification. The finished control panel shall bear a serialized UL label listed for "Enclosed Industrial Control Panels". The enclosure, and all components mounted on the sub-panel or control cover, shall conform to UL descriptions and procedures.

G. The control panel shall be equipped with a transient voltage surge suppressor to minimize damage to the pump motors and control from transient voltage surges. The suppressor shall utilize thermally protected silicon-oxide varistors encapsulated in a non-conductive housing. Mechanical indicators shall be provided on each phase to indicate protection has been lost.

H. Motor Branch Components

1. A properly sized heavy duty air circuit breaker shall be furnished for each pump motor, and shall have a symmetrical RMS interrupting rating of 30,000 amperes at 230 volts. Circuit breakers shall be sealed by the manufacturer after calibration to prevent tampering.
   a. A padlocking operating mechanism shall be installed on each motor circuit breaker. Operating handles for the breaker mechanisms shall be located on the enclosure outer door, with interlocks which permit the door to be opened only when circuit breakers are in the "OFF" position. An additional mechanism(s) shall be provided on the circuit breaker permitting the breaker to be operated and/or locked with the control panel door in the open position.
2. An open frame, across-the-line, NEMA rated magnetic motor starter with solid state adjustable overloads shall be furnished for each pump motor. Starters shall be designed for addition of at least two auxiliary contacts. Power contacts shall be double-break and made of cadmium oxide silver. Coils shall be epoxy molded for protection from moisture and corrosive atmospheres. The starter assembly shall be equipped with a metal mounting plate for durability. All motor starters shall be equipped to provide under-voltage release and overload protection on all three phases. Motor starter contacts and coils shall be easily replaceable without removing the motor starter from its mounted position.
3. Overload relays shall be solid-state block type, having visual trip indication with trip-free operation. Electrically resetting the overload will cause one (1) normally open and one (1) normally closed isolated alarm/control contact to reset, thus re-establishing a control circuit. Trip setting shall be governed by solid-state circuitry and adjustable current setting. Trip classes shall be 10, 15 and 20. Additional features to include phase loss protection, selectable jam/stall protection and selectable ground fault protection.
   a. An overload reset pushbutton, mounted through the control panel door, shall permit resetting the overload relay for each pump without opening the exterior door.

I. All motor branch and power circuit components shall be of highest industrial quality. The short circuit current rating of all power circuit devices shall be a tested combination or evaluated per the National Electrical Code Article 409. The lowest rated power circuit component shall be the overall control panel short circuit rating and shall not be less than the fault current available. The minimum control panel rating shall not be less than 10 kA, RMS symmetrical. Control assemblies operating at 120 volts nominal or less may be provided with transformers which limit the fault current and may be rated less than the minimum required short circuit rating.

J. Oil-tight pilot lights shall be provided as specified herein. Pilot lights furnished shall be in addition to any lights provided as a part of any automatic level controller that may be specified herein. All pilot lights shall be suitable for 120VAC, and shall be mounted in keyed openings on the inner door of the control panel. Pilot lights shall be push-to-test, shall utilize LED lamps and shall be provided with jeweled glass or plastic lenses a minimum of 30mm in diameter. A common push-to-test button for verifying the condition of pilot light lamps shall also be acceptable.

1. Individual pilot lights will be provided on the door of the control panel to alert station maintenance personnel to a “pump run”, “high stator temperature” or “seal leak” condition for each pump, plus “wetwell high level alarm” and “wetwell low level alarm”.

2. Each "pump run" light shall be wired in parallel with the related pump motor starter to indicate that the motor is (or should be) running. Running lights shall be green in color.
3. The pump control panel shall be equipped to terminate pump operation due to high motor winding temperature or moisture in the motor housing, utilizing contacts in the pump motor housing. If either event should occur, the motor starter will drop out and a "high stator temperature" or "seal fail" pilot light on the panel door shall indicate that the pump motor has been shut down. The associated circuitry for either condition shall require manual reset. High temperature and seal leak lights shall be red in color.

K. The control circuit shall be protected by a normal duty thermal-magnetic air circuit breaker which shall be connected in such a manner as to allow control power to be disconnected from all control circuits.

L. Pump mode selector switches shall be connected to permit manual start and manual stop for each pump individually, and to select automatic operation of each pump under control of the liquid level control system. Manual operation shall override the liquid level control system. Selector switches shall be heavy duty, oil-tight design, with contacts rated NEMA A300 minimum.

M. Control panel designs that utilize float switches for level sensing and control shall be provided with a separate alternating relay, as well as a lead-lag-auto selector switch mounted on the inner door of the control panel.)

1. A lag pump start delay timer shall be provided to prevent the simultaneous starting of pumps after a power failure, or if both pumps are called for by the liquid level control system.

N. Six digit elapsed time indicators (non-reset type) shall be connected to each motor starter to indicate the total running time of each pump in "hours" and "tenth of hours".

O. Dry (non-powered) contacts shall be provided to the terminal strip for connection to existing or future SCADA equipment that may not be required under this contract. Contacts provided shall be provided for each pump to indicate "pump on", "pump off", "pump high temperature", and "pump leakage alarm". Dry contacts for "high wet well level" and "Control Panel Loss of Phase" shall also be provided.
1. Monitoring contacts shall be provided for each pump located in the wet well. All contacts shall be Form B design, capable of carrying a minimum of 10 amps at 120VAC. Contact closures shall be separately wired with two separate leads in the panel, and with no common wiring between functions.

P. A 4-20mA output signal to existing or future SCADA equipment shall be provided for "wetwell level".

Q. One (1) duplex ground fault indicating utility receptacle providing 115VAC power shall be mounted on the side of the control enclosure. Receptacle circuits shall be protected by 15 ampere thermal-magnetic circuit breakers.

R. The lift station shall be equipped with NEMA 3R enclosed 5KVA auxiliary control transformer to supply 115VAC for control and auxiliary equipment. The primary and secondary side of the transformer is to be protected by a thermal magnetic circuit breaker sized to meet the power requirements of the transformer.

S. The lift station shall be equipped with 120/240V-1Phase load center with main breaker, branch circuit breakers for all 120/240V lift station equipment. The load center shall be fed from the stepdown transformer described above. An operating mechanism shall penetrate the control panel deadfront inner door for each breaker. All breakers shall be numbered and labeled (with associated circuit function), as follows:
1. Breaker(s) as required for all controls/etc. internal to panel (quantities/types as required)
2. 20A/1P for SCADA RTU/Telemetry

3. 20A/1P for Site Lighting/Receptacle
4. 20A/1P for Generator Block Heater
5. 20A/1P for Generator Battery Charger
6. A minimum of two (2) 20A/1P Spares

T. The control panel shall be equipped to monitor the incoming power and shut down the pump when required to protect the motor(s) from damage caused by voltage less than 83% of nominal. The motor(s) shall automatically restart when power conditions return to normal.

U. The control panel shall be equipped with a panel heater to minimize the effects of humidity and condensation. The heater shall include an adjustable thermostat.

V. The control panel, as furnished by the manufacturer, shall be completely wired. The contractor shall field connect the power feeder lines to the main terminal block, final connections to the remote alarm devices, and the connections between the pump and the pump motor control. All wiring, workmanship, and schematic wiring diagrams shall be in compliance with applicable standards and specifications set forth by the National Electric Code (NEC). All user serviceable wiring shall be type MTW or THW, 600 volts, and shall be color coded as follows:

- Line and load circuits, AC or DC power — Black
- AC control circuit less than line voltage — Red
- DC control circuit — Blue
- Interlock control circuit, from external source — Yellow
- Equipment grounding conductor — Green
- Current carrying ground — White
- Hot with circuit breaker open — Orange

W. Control circuit wiring inside the panel, with the exception of internal wiring of individual components, shall be 16 gauge minimum, type MTW or THW, 600 volts. Power wiring shall be 14 gauge minimum. Motor branch and other power conductors shall not be loaded above the temperature rating of the connected termination. Wires shall be clearly numbered with suitable indelible marking tape at each end, in accordance with the electrical diagrams. All wires on the sub-plate shall be bundled and tied.

X. Wires connected to components mounted on the enclosure door shall be bundled and tied in accordance with good commercial practice. Bundles shall be flexible at the hinged side of the enclosure. Adequate length and flex shall be provided to allow the door to swing to its full open position without undue stress or abrasion on the wire or insulation. Bundles shall be held in place on each side of the hinge by mechanical fastening devices.

Y. The pump control manufacturer shall provide a common ground bar mounted on the enclosure back plate. The mounting surface of the ground bar shall have any paint removed before making final connections. The contractor shall make the field connections to the main ground lug and each pump motor in accordance with the National Electric Code.

Z. A permanent corrosion resistant name plate(s) shall be attached to the control and include the following information:

- Equipment serial number
- Control panel short circuit rating
- Supply voltage, phase and frequency
- Current rating of the minimum main conductor

- Electrical wiring diagram number
- Motor horsepower and full load current
- Motor overload heater element
- Motor circuit breaker trip current rating
- Name and location of equipment manufacturer

AA. Control components shall be permanently marked using the same identification shown on the electrical diagram. Identification labels shall be mounted adjacent to the device. Switches, indicators, and instruments shall be plainly marked to indicate function, position, etc. Marking shall be mounted adjacent to and above the device.

BB. All conduit and fittings utilized in construction of the station shall be UL listed. Liquid tight flexible metal conduit shall be constructed of smooth, flexible galvanized steel core with smooth abrasion resistant, liquid tight, polyvinyl chloride cover. Conduit shall be supported in accordance with articles 346, 347, and 350 of the National Electric Code. Conduit shall be sized according to the National Electric Code.

CC. Station manufacturer shall provide a station/system (or direction to the contractor on how to install the system) to meet all applicable requirements of NEC for hazardous areas as defined by NFPA 820 (for conduit seals, explosion-proof devices where in hazardous areas, conduit types, intrinsically-safe relaying/isolation, etc.). Station design shall provide physical separation between the wetwell and the above-ground pump station control panel as required to limit the hazardous area.

2.10 LIQUID LEVEL CONTROL

A. The manufacturer of the liquid level control system shall be ISO 9001:2000 revision certified, with scope of registration including design control and service after sales activities.

B. The level control system shall start and stop the pump motors in response to sensed changes in wet well level, as set forth herein. The level control system shall utilize a submersible transducer for primary level control, but shall also be provided with backup floats.

C. The level control system shall incorporate automatic alternation to select first one pump, then the second pump to run as the lead pump for successive pump starts. Alternation shall occur at the end of a pumping cycle, or in the event of excessive run time.

D. The liquid level control system shall be model PC3000, as manufactured by Primex Controls or equal. The PC-3000 is a general purpose pump controller designed to sequence pumps on and off in response to changes in level. The primary sensor input to the controller shall be a 4-20 ma loop as provided by the submersible level transducer as specified herein. A loop power supply shall included in the PC-3000 controller to provide excitation voltage to the transducer.

E. The PC-3000 shall provide a front panel user interface for field setup and level setting adjustments. Connection to the level controller shall be made by means of a removable terminal block assembly on the back cover, facilitating replacement if necessary without the need to remove individual wires to the controller. The block assembly shall unplug directly without need of removing/disconnecting individual wires.

F. The PC-3000 shall incorporate the following features as a minimum:

1. A 32-character alpha-numeric liquid crystal display for level, status, and setpoint information. An alternation selection switch shall be provided on the front panel to enable the operator to turn alternation on, and allow the manual designation of the lead pump if alternation is off. The controller shall provide a simple menu structure for easy display and modification of pump operating setpoints and setup configuration.
2. Built in elapsed time meters shall be provided for all pumps, which shall be non-volatile and easily examined from the front panel.
3. A 4-20 ma main sensor input with loop power supply shall be included, for easy connection to the submersible level transducer, with adjustments being provided for both scale and offset as may be required. A fully-scalable 4-20 ma level output transmitter shall also be included.
4. Inputs for pump seal leak sensors and pump over temperature sensors with display messages for out of specification conditions shall be included.
5. Built-in single float backup logic shall be provided.
6. Three auxiliary inputs shall be provided, which can be used as pump-disable or pump-run confirmation inputs for a fail to start test.
7. A built-in horn relay with internal contact closures shall be provided, as well as an input for an external mute button.
8. Relay outputs for both high and low level alarms with adjustable setpoints shall be provided. These outputs shall be integrated into the pump control design to provide contact closures for the operating circuitry, as well as to provide the dry output contacts for future SCADA integration, as specified herein.
9. Individually selectable on and off setpoints for up to three pumps shall be provided, for integration into the pump control panel logic for operation as specified herein.

G. Inputs to the level controller shall be filtered and transient protected. The controller shall be provided with all required software as “built in”, and no programming shall be shall be required for proper operation. Only adjustments to level control settings shall be necessary to facilitate field setup.

H. All inputs to the level controller shall operate on low voltage/current for safety. Input power to the controller shall be 115VAC, internally fused and transient protected. As specified above, all terminal strips connecting panel wiring to/from the controller shall unplug without removing the wires for easy field replacement.

I. Level in the wet well shall be sensed by means of a submersible level transducer suspended in the wet well. The transducer shall be manufactured for years of trouble free service in the harshest applications, and shall measure the height of the liquid in the wet well above its position in the tank referenced to atmospheric pressure. The transducer shall consist of a piezoresistive sensing element, fully encased in a 316 SS housing. Superior lightning and surge protection utilizing dual arrestor technology, grounded to the case, eliminating both power supply surges and lightning ground strike transients shall be provided. A large diameter 316 SS diaphragm shall be provided for non-clogging service and damage resistance to any floating solids.

1. The transducer shall be suspended approximately 6" off the bottom of the wet well. Transducer shall be an analog device, specifically selected for the intended service, and shall be capable of providing a 4-20 milliamp level signal proportional to the sensed

liquid level in the wet well. The unit shall be sealed and non-fouling design, and shall be provided with a flush-mounted abrasion resistant 316 S.S. diaphragm.

2. The transducer shall be constructed with 316 S.S. wetted materials. Cable jacket shall be EFTE or polyurethane. Accuracy shall be +/- 0.25% of full scale, including the effects of linearity, hysteresis and repeatability, and shall be suitable for a maximum temperature of 200° F. Integral lightning and surge protection shall be provided. Diaphragm shall be protected from cuts or damage from foreign objects in the wastewater by means of a 316 S.S. plate across the bottom of the transducer, supported by 316 S.S. rods and positioned to prevent contact of trash with the diaphragm.
3. Output signal from the transducer shall be 4-20 mA, two wire design, with integral shielding and a ventilation tube to automatically compensate for changes in atmospheric pressure. Cable shall have a minimum 270-pound tensile strength. Adequate cable shall be provided to allow installation of the transducer without need for splices in the cable between the wet well and the control panel location. Extra cable length shall be neatly coiled in the bottom of the panel enclosure.
4. The transducer shall be vented to atmosphere by means of tubing contained within the included cable, and a desiccant cartridge shall be provided for installation in the control panel at the end of the cable. The filter shall block particles such as dust, dirt, and water droplets from entering the tube. Not less than two (2) spare filters shall be provided.
5. A 316 S.S. lift loop/hanger fitting shall be provided with the transducer. 316 S.S. aircraft cable (or chain) shall be used to suspend the transducer, with double clamps provided at each end. The transducer shall be suspended from a 316 S.S. hanger bracket mounted inside the wet well access cover.
6. Level transducer shall be the Dwyer Model PBLT2, or approved equal. One spare transducer shall be provided as a spare part, complete with cable length as noted above, for use by the Owner.

J. A total of four (4) backup control level float switches shall be supplied with the pump control panel, for installation by the contractor as shown on the Plans or as directed in the field. The backup control level float system shall incorporate automatic alternation to select first one pump, then the second pump to run as the lead pump for successive pump starts. Alternation shall occur at the end of a pumping cycle, or in the event of excessive run time. Each float switch shall be provided with adequate cable to reach the wetwell junction box, with 10’ coil of extra cable, without splicing. Switches shall be the direct-acting type, designed and constructed for extremely long life in severe applications. Each switch shall contain a single pole mercury switch in the normally open position, which shall close when the switch body is tilted. Switches shall be epoxy encapsulated, and the level sensors shall be impact and corrosion resistant.

1. Float switch housings shall be 316 S.S., and shall be provided with a Teflon coating to reduce the buildup of fat, oil, grease and other materials. #14/3 AWG Hypalon-jacketed Type SO cable shall be provided with each float switch, of the length as noted herein, or as necessary for installation on site. Cable shall have a minimum of 105 strands of copper in each conductor for maximum flexibility. A green ground wire shall also be included in the cable for each float switch, and shall be connected to the ground terminals in the pump control panel. Float switch contacts shall be rated for 20 amps @ 120VAC.
2. Each float switch shall be provided with the necessary hardware to enable it to be securely mounted on a 1/8" diameter 316 S.S. mounting cable. A suitable weight kit shall be attached to the bottom of the float switch suspension cable to secure both the cable and the float in the wet well, and to prevent excessive movement. The float switch connection hardware shall be adjustable to allow repositioning in the wet well as

required. The entire float assembly (weight, support cable, and all switches) shall be easily removed from the wet well for inspection, cleaning, or adjustment as required. Mounting hardware shall be included for installation of the float switches on the support cable assembly.

3. Float switches shall be Model P40NO-SST, manufactured by Anchor Scientific, Inc. or approved equal. A suitable 304 S.S. support bracket shall be provided with the wet well access cover, for securing the switch support cable at the top of the wet well. Two (2) spare float switches shall be provided for future use by the Owner.

K. An alarm silence push button and relay shall be provided to permit maintenance personnel to de-energize the audible alarm device (if provided) while any corrective actions are underway. After silencing the alarm device, manual reset of the alarm condition shall clear the alarm silence relay automatically. The pushbutton shall be oil tight design with contacts rated NEMA A300 minimum.

L. The station manufacturer will supply a 115VAC LED alarm light fixture with a vapor-tight red globe, guard, conduit box, and mounting base. The design must prevent rain water from collecting in the gasketed area of the fixture, between the base and globe. The alarm light will be shipped loose, for installation by the contractor in the location as designated by the Engineer or the Owner.

M. The alarm light circuit shall be equipped with a flasher causing the alarm light to flash. Flash rate shall be approximately 1 second (½ second on and off)..

2.11 SPARE PARTS AND EQUIPMENT

A. After installation and startup of the existing station, the pump station manufacturer shall provide the following spare parts and equipment to the Owner for use during normal operation and/or maintenance:

1. Twelve (12) oil inspection plug gaskets
2. One (1) mechanical seal for each pump model
3. One (1) complete set of all O-rings required for each pump model, in addition to the requirements of Item 1 above
4. Ten (10) oil plug inspection O-rings, in addition to the complete set of O-rings required in (3) above.
5. One (1) complete PBLT2 submersible transducer with cable.
6. Two (2) float switches of the type(s) provided.
7. Other items per Specification Section 262900 (“Manufactured Control Panels”) requirements.

B. All spare parts shall be provided packed in suitable containers for extended storage by the Owner. Any spare parts consumed during the course of equipment startup shall be replaced by the manufacturer without cost to the Owner

PART 3 - EXECUTION

3.1 EXAMINATION

A. Contractor shall off-load equipment at installation site using equipment of sufficient size and design to prevent injury or damage. Station manufacturer shall provide written instruction for proper handling. Immediately after off-loading, contractor shall inspect complete pump station and appurtenances for shipping damage or missing parts. Any damage or discrepancy shall be noted in written claim with shipper prior to accepting delivery. Validate all station serial numbers and parts lists with shipping documentation. Notify the manufacturer's representative of any unacceptable conditions noted with shipper.

3.2 INSTALLATION

A. The contractor shall install, level, align, and lubricate all equipment associated with the pump station as shown indicated on the project drawings, and as outlined in the O&M manual provided with the equipment. Installation must be in accordance with written instructions supplied by the manufacturer at time of delivery.

B. Check motor and control data plates for compatibility to site voltage. Install and test the station ground prior to connecting line voltage to station control panel.

C. Prior to applying electrical power to any motors or control equipment, check all wiring for tight connection. Verify that all protective devices (fuses and circuit breakers) conform to project design documents. Manually operate circuit breakers and switches to ensure operation without binding. Open all circuit breakers and disconnects before connecting utility power. Verify line voltage, phase sequence and ground before actual start-up.

3.3 FIELD QUALITY CONTROL

A. Operational Test

1. Prior to acceptance by Owner, an operational test of all pumps, and control systems shall be conducted to verify that the installed equipment meets the purpose and intent of these Specifications. Tests shall demonstrate that all equipment provided is electrically, mechanically, structurally, and otherwise acceptable; that it is safe and in optimum working condition; and that it conforms to the specified operating characteristics.
2. After construction debris and foreign material has been removed from the wet well, contractor shall supply clear water volume adequate to operate station through several pumping cycles. Observe and record operation of pumps, suction and discharge gage readings, ampere draw, pump controls, and liquid level controls. Check calibration of all instrumentation equipment, test manual control devices, and automatic control systems. Be alert to any undue noise, vibration or other operational problems.

B. Manufacturer’s Start-up Services

1. Coordinate station start-up with the manufacturer's technical representative. The representative or factory service technician will inspect the completed installation,

calibrate and adjust instrumentation, correct or supervise correction of defects or malfunctions, and instruct operating personnel in proper operation and maintenance procedures.

3.4 CLEANING

A. Prior to acceptance, inspect interior and exterior of pump station for dirt, splashed material or damaged paint. Clean or repair accordingly. Remove from the job site all tools, surplus materials, scrap and debris.

3.5 PROTECTION

A. The pump station should be placed into service immediately upon completion of field startup. If operation is delayed, the station shall be stored and maintained per the manufacturer's written instructions until it is ready for use.

END OF SECTION 115000

JRA PROJECT NO. 218176
Horseleg Creek Sanitary Sewer Pump Station Addition
Rome, Georgia
CLIENT JOB NO. 260519.04
BASED ON CLIENT TEMPLATE: "Insite doc.docx"
PRINTED ON: April 25, 2019

ELECTRICAL SPECIFICATION INDEX:

SECTION NO ..... SECTION DESCRIPTION
260500..... BASIC ELECTRICAL MATERIALS AND METHODS
260519..... POWER CONDUCTORS AND CABLES 51V-600V
260526..... GROUNDING
260533..... RACEWAYS
260534..... OUTLET BOXES, JUNCTION BOXES, WIREWAYS
260553..... ELECTRICAL IDENTIFICATION
262726..... WIRING DEVICES
262816..... SAFETY SWITCHES AND FUSES
262900..... MANUFACTURED CONTROL PANELS
263213..... GENERATOR SETS
263623..... AUTOMATIC TRANSFER SWITCHES
264300..... SURGE PROTECTIVE DEVICES
265000..... LIGHTING MATERIALS AND METHODS
270500..... AUXILIARY SYSTEM CABLES, 0-50V

INSITE ENGINEERING

WWW.INSITEENGINEERING.ORG

DIVISION 26/27/28 ELECTRICAL

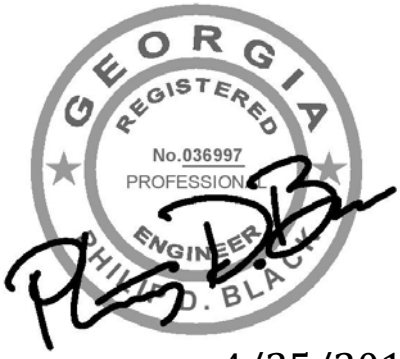

4/25/2019

SECTION 260500 - BASIC ELECTRICAL MATERIALS AND METHODS

PART 1 - GENERAL

1.1. DESCRIPTION

A. General Conditions:
   1. The accompanying General Conditions (front-end specifications) shall apply to and form a part of this section.

B. General Requirements:
   1. Carefully examine General Conditions, other specification sections, and other drawings (in addition to Electrical) in order to be fully acquainted with their effect on electrical work.
   2. Do all work in compliance with all applicable codes, laws, and ordinances, the National Electrical Safety Code, the National Electrical Code (hereinafter referred to as "Code"), applicable energy codes, and the regulations of the local utility companies. Obtain and pay for any and all required permits, inspections, certificates of inspections and approval, and the like.
   3. Cooperate with other trades and contractors at job. Perform work in such manner and at such times as not to delay work of other trades. Complete all work as soon as the structure and installations of equipment will permit. Patch, in a satisfactory manner and by the proper craft, any work damaged by electrical workmen.
   4. The Owner shall be provided access to all software to include copies of software for all systems provided under this division of the specifications. Software shall be password protected where applicable.
   5. Only qualified electrical sub-contractors will be allowed to submit proposals for this project. In order to be considered qualified, contractor shall have completed a minimum of five (5) projects of similar type/scope and equal or greater magnitude and complexity within the last ten (10) years. Sub-contractors without qualifications will be rejected. If desired, potential electrical sub-contractors may submit qualification evidence for review and pre-bid approval a minimum of ten (10) days prior to bid. Previous projects used to meet this experience requirement must have included similar (or greater) scopes of work for each of the following areas:
      a. Power Systems.
      b. Control Systems.
      c. Instrumentation Systems.
   6. Electrical contracting firm shall be licensed as an electrical contractor in the state where work will be performed

1.2. GENERAL SCOPE OF ELECTRICAL WORK (REFER TO DRAWINGS FOR OTHER SPECIFIC SCOPE ITEMS)

A. Furnish all labor and materials to complete electrical work as shown on drawings and/or herein specified.

B. Remove all existing electrical equipment and wiring made obsolete by this project and remove or relocate all electrical services located on or crossing through the project property, either above or below grade, which would obstruct the construction of the project or conflict in any manner with the completed project or any code pertaining thereto. Dispose of salvageable materials as directed by the Engineer. Contractor shall schedule meeting to review scope of electrical demolition and to confirm scope and phasing of proposed demolition with the owner in the presence of the prime consultant prior to start of any electrical demolition.

C. Furnish and install complete power, telephone and other electrical services as shown on drawings and/or specified herein.

D. Pay all electrical utility company service charges (if any) in connection therewith, including permanent meter deposit. Meter deposits will be refunded to Contractor at time of Owner's acceptance.

E. Furnish and install complete power distribution system as shown on drawings and/or specified herein.

F. Furnish and install a complete Power Generation and Automatic Transfer Switch System as shown on drawings and/or specified herein.

G. Furnish and install disconnect switches for motors as shown on drawings and/or specified herein.

H. Furnish and install complete electrical grounding systems as shown on drawings and/or specified herein.

I. Install and connect electrical equipment mentioned in Division 26/27/28 Specifications or noted in drawings, whether furnished by electrical contractor or by others.
   1. Where shown or specified, equipment furnished by others shall be installed and connected under this Contract.
   2. Where shown or specified, Contractor shall receive, unpack, check and assume custody of equipment furnished by Others. Contractor shall assume responsibility for care and safekeeping of this equipment, when delivered into his custody. He shall protect it from moisture, dust and damage during construction and until Owner acceptance of project.

J. Furnish and install complete electrical lighting systems as shown on drawings and/or specified herein.

K. Furnish and install all electrical items shown on drawings and/or herein specified, unless shown or specified otherwise.

L. Furnish and install complete telephone/data raceway (including all outlet boxes, face plates, conduit raceways, telephone backboards, terminal cabinets, etc.) system as shown on drawings and/or specified herein.

M. Furnish and install a complete Surge Protection System as shown on drawings and/or specified herein.

N. Procure and pay for permits and certificates as required by local and state ordinances and fire underwriter's certificate of inspection.

O. Balance loads as equally as practicable on services, distribution feeders, circuits and buses. Provide typewritten directory for each panel.

P. Unless specifically indicated or required otherwise, terminate all circuitry/cabling provided within this contract at associated equipment/devices/etc. in accordance with all applicable codes, standards and supplier requirements, whether associated equipment/device/etc. is furnished within this contract or by others.

Q. Complete field testing, adjustment & startup of all systems listed above as shown on drawings and/or specified herein.

PART 2 - PRODUCTS

2.1. APPROVED MATERIALS AND DEVICES

A. Where not otherwise specified, provide only new, standard, first-grade materials/systems throughout, conforming to standards established by Underwriter's Laboratories, Inc., and so marked or labeled, together with manufacturer's brand or trademark. All equipment/systems subject to approval of Engineer before installation. All like items and associated equipment/systems shall be of one manufacturer.

B. To insure proper coordination, it is intended that all electrical equipment and materials specified in Division 26/27/28 of these specifications and shown on the electrical drawings be furnished and installed by the electrical sub-contractor. It will not be permissible for any of these items to be furnished directly by the general contractor without the electrical contractor's coordination.

C. To insure commonality of spare parts, it is required that the electrical contractor provide the same brand for all circuit breakers, starters, power equipment, etc. provided under the following divisions of these specifications:

2.2. SUBMITTALS

A. All submittals to the design team shall be accompanied by a letter summarizing all proposed deviations from specified products or pre-approved substitutions. The absence of such a letter shall be understood to indicate that the contractor intends to meet all contract requirements, regardless of cut-sheets/data-sheets provided within the submittal.

B. Submit to Engineer ten (10) days prior to bid date three (3) copies of any items and/or manufacturers which are proposed as substitutes for those specified.

C. Submit to Engineer promptly after award of Contract and prior to purchasing, the number of copies required by the contract. All drawings of a specific item or system shall be made in one submittal, and within thirty (30) days after award of Contract. Shop drawings of all power equipment shall contain exact details of device placement, phasing and numbering, in form of elevations, for each major piece of equipment. Shop drawings shall be submitted on the

following:

1. SECTION 262816: SAFETY SWITCHES AND FUSES
2. SECTION 262900: MANUFACTURED CONTROL PANELS
3. SECTION 263213: GENERATOR SETS
4. SECTION 263623: AUTOMATIC TRANSFER SWITCHES
5. SECTION 264300: SURGE PROTECTIVE DEVICES
6. SECTION 265000: LIGHTING MATERIALS AND METHODS
7. ALL POWER DISTRIBUTION EQUIPMENT (i.e. SWITCHBOARDS, PANELBOARDS, DRY TYPE TRANSFORMER, ETC.)
8. ALL ELECTRICAL PLATFORM LAYOUTS - Submittals shall include to-scale sketches of the proposed electrical platform layouts indicating all panelboards, transformers, equipment racks, control panels, generators, transfer switches, meters, etc.. Layouts shall show that each piece of electrical equipment has the clearances, working space and dedicated equipment space required by applicable codes. No conduits to equipment within these rooms shall be installed until submittals have been provided and returned without exception by the design team.
9. ALL CONTROL ITEMS & SYSTEMS

D. The contractor shall fully review, comment upon and correct all shop drawings as required to assure compliance with contract documents prior to submittal to Engineer. The failure of the contractor to properly review and correct shop drawings prior to submittal will result in rejection of shop drawings by the engineer. Review by the Engineer will be for general conformance with contract documents. The contractor shall be fully responsible for correctness of all submitted dimensions, details, quantities and locations.

E. None of the above items shall be installed until shop drawings or catalog data have been reviewed by Engineer without rejection or required resubmittal. Any listed item not submitted, even if specified, shall be considered not acceptable and shall be removed if directed.

F. Any required resubmittal will be reviewed by the Engineer for conformance with previously issued comments only. The contractor shall be responsible for verifying that all items not specifically requiring resubmittal have not been altered from the previously reviewed submittal.

G. Material proposed for substitution shall be of the same quality, perform the same functions, conform to such physical dimensions and appearance as are required by the Engineer. All material proposed for substitution is subject to the approval of the Engineer and his authority for approval is final. No material proposed for substitution will be considered unless all submittal data complies with the drawings and specifications of Section 16 as to time of submission, number of copies of submittal, and detail requirements.

H. Samples of material shall be furnished where required by drawings or Division 26/27/28 Specification, or as requested by the Engineer on items proposed as substitutes.

I. Submit to Engineer a certificate of final inspection from local inspection department.

PART 3 - EXECUTION

3.1. SITE VISIT

A. The Contractor shall visit the site to determine existing dimensions and conditions affecting electrical work. Failure to do so in no way relieves Contractor of his responsibility under Contract.

3.2. CLEARANCE WITH UTILITIES

A. It shall be the responsibility of this Contractor, prior to bid, to reaffirm with the utility companies involved, that the locations, arrangement (and with power company voltage, phase, and metering required) and connections to utility service are in accordance with their regulations and requirements. If their requirements are at variance with these drawings and specifications, the Contract price shall include any additional cost necessary to meet those requirements without extra cost to Owner after a contract is entered into.

B. On many projects the utility company may levy charges due to locations, size or type service involved. The Contractor shall be responsible for these charges (including permanent meter deposit), unless such charges are not available prior to bid and Contractor so documents as described below. The meter deposit will be refunded to the contractor at time of Owner's acceptance.

C. Should above cost not be available, prior to bid, Contractor must submit a letter signed by a responsible utility company person so stating with his bid and in turn must be submitted by Prime Contractor with his bid to Owner. The cost will then be deleted from the Contract and become responsibility of the Owner.

D. Arrange with utility companies for such services as shown or herein specified and installation of meter where shown. Furnish with shop drawings a signed document from utility companies describing the location and type of services to be furnished and any requirements they may have. This document shall be signed for each utility company by a person responsible for granting such service.

3.3. WORKMANSHIP

A. All work shall be in accordance with the latest editions of NFPA 70 (National Electrical Code), NFPA 101 (Life Safety Code), National Electric Safety Code, International Building Code, applicable NECA standards and the rules and regulations of State and Local Authorities Having Jurisdiction.

B. All work shall be executed in a workmanlike manner and shall present a neat and mechanical appearance upon completion.

C. All equipment, devices, etc. shall be installed in accordance with manufacturer's recommendations.

D. All items shall be installed straight and plumb in a workmanlike manner and care shall be exercised so that like items are mounted the same position, heights and general location.

E. Keep site clean of accumulation of cartons, trash and debris.

3.4. SAFETY

A. The contractor is solely responsible for all job safety. Engineer assumes no responsibility for job safety. Maximum consideration shall be given to job safety and only such methods as will reasonably insure the safety of all persons shall be employed. The codes and regulations of OSHA shall be given strict compliance as well as such other codes, laws, and regulations as may be applicable.

3.5. CONTRACT DOCUMENTS

A. Contract documents indicate diagrammatically, extent, general character and approximate location of work. Where work is indicated but minor details omitted, furnish and install it complete so as to perform its intended functions. For details and mechanical equipment, follow drawings provided by other disciplines (Architectural, Mechanical, Structural, Civil, etc.) and fit electrical work thereto.

B. Contract documents consist only of the hardcopy documents issued by the Prime Engineer. Electronic documents issued directly by the electrical engineer to the contractor and/or its sub-contractors/vendors are issued for convenience only (electronic documents are not formal contract documents).

C. If the contractor and/or one of its suppliers require a one-time transfer of electronic files of the current electrical construction documents to prepare shop drawings (or for another similar purpose), it shall:
   1. Sign a waiver prepared by the electrical engineer prior to the transmittal of these files.
   2. Agree to pay the electrical engineer a fee of $50.00 per drawing, up to a maximum of $400 per transfer, payable upon receipt of the files.
   3. To the fullest extent permitted by law, indemnify, hold harmless, and defend JRA from all claims, damages, losses and expenses, including attorneys' fees arising out of or resulting from the use of the CAD files.

D. Take finish dimensions at job in preference to scaled dimensions.

E. Except as above noted, make no changes in or deviations from work as shown or specified except on written order of Engineer.

3.6. UNDERGROUND UTILITY/EQUIPMENT COORDINATION

A. Prior to commencement of work, verify exact locations of all existing or proposed underground utilities and/or underground equipment and verify that proposed electrical installation does not conflict with these items. Notify Engineer immediately if any conflict is found.

3.7. EQUIPMENT STORAGE

A. Store all electrical equipment in dry, covered locations as directed by equipment manufacturers. Contractor shall be responsible for replacing or repairing improperly-storted equipment as directed by Engineer.

3.8. EXCAVATION, CUTTING AND PATCHING

A. Perform all cutting and excavating as necessary for installation of electrical systems, unless specifically covered under another section. After Engineer's observation, complete all excavation, filling and backfilling as directed under specifications for preparation of site and earthwork. Foundations for equipment shall be as specified under concrete section. Concrete pads shall be minimum of 6" thick; unless greater thickness required by equipment manufacturer. Obtain specific approval of Engineer before cutting into any structural members.

B. For all such work employ competent workmen, and finish up in neat and workmanlike manner, equal to quality and appearance to adjacent work.

3.9. PENETRATIONS

A. All penetrations in water tight barriers shall be made so that barrier rating is not compromised. Furnish roof flashing for all equipment installed under Division 26/27/28 that penetrates through the roof. Appropriate flashing is specified under roofing and sheet metal section. Supply these flashings for installation under roofing and sheet metal section.

B. All fire/smoke barrier penetrations shall be made in accordance with a U.L. listed assembly to maintain the fire/smoke rating of the associated membrane.

C. Where penetrations are required through structural elements, verify penetration locations and sizes with structural engineer. In no case shall the structural integrity be compromised without written approval from structural engineer.

3.10. INSTALLATION OF EQUIPMENT - GENERAL

A. Care shall be exercised in exact routing and location of all items so as not to obstruct access to equipment, personnel walkways, or expose it to potential mechanical damage.

B. Items shall be securely anchored and/or fastened. All construction shall meet the seismic design requirements of the building code. Items (especially transformers, light fixtures, equipment racks, freestanding gear, etc.) installed in seismic zones C, D, E or F shall be supported and braced per applicable codes and standards.

C. All wall, pole or frame-mounted electrical equipment shall be mounted to metal unistrut (or similar) frames of same material as electrical equipment. For example, pole-mounted stainless steel disconnect switches shall be mounted to stainless steel unistrut frames.

D. All electrical equipment, furnished by Contractor or by others shall be covered and protected during construction.

E. All control cabinets, panels, motor control centers and other electrical cabinets and enclosures shall have all trash removed and be vacuumed clean. All foreign paint, etc., shall be removed from exterior and all scratches in finish touched up with same color and material as original. Any rusted areas shall be sanded, primed and repainted.

F. All relays, starters, push-button and other control devices shall be cleaned and if necessary, lubricated with CRC 2-26 to assure free operation.

3.11. MOTORS, STARTERS AND CONTROLS

A. Unless otherwise specified or shown, all motors will be furnished and installed under other sections of this specification.

B. Electrical Contractor shall install all starters and all electrical power wiring and connections to motors and starters.

C. Unless otherwise specified or shown, all control items for motors shall be furnished, installed and wired in conduit by the electrician.

3.12. CIRCUITS AND BRANCH CIRCUITS

A. Outlets shall be connected to branch circuits as indicated on drawings by circuit numbers. No more outlets than are indicated shall be connected to a circuit.

B. Branch circuit homeruns shall be installed as shown on drawings. Multiple homerun conduits shall not be combined by contractor into larger, single homerun conduits unless specific permission is granted by the Engineer.

3.13. LUG/TERMINAL RATINGS

A. All lug/terminal ratings, sizes, locations, types, etc. shall be coordinated with the associated conductor sizes, types, routings, etc. by the contractor.

B. All lugs/terminals/etc. shall be rated for 75 degree C terminations (minimum, unless specified otherwise).

3.14. EQUIPMENT FAULT CURRENT RATINGS

A. All equipment and breakers shall meet the minimum RMS symmetrical interrupting capacity ratings shown on plans for the associated distribution equipment. All interrupting ratings shall be full ratings. Where new devices or breakers are added to existing distribution equipment, the new devices/breakers shall have interrupting ratings matching or exceeding that of the existing distribution equipment.

3.15. OUTLET LOCATION

A. Symbols shown on drawings and mounting heights indicated on drawings and in specifications are approximate only. The exact locations and mounting height must be determined on the job and it shall be the Contractor's responsibility to coordinate with other trades to insure correct installation.

3.16. IDENTIFICATION

A. Each panel shall have each circuit identified. Panels without branch circuit nameplates shall have typewritten directories.

B. Each individually mounted switch, circuit breaker, starter and/or any other control or protective

device shall identify equipment fed and fuse size, if any, by engraved plastic nameplate, white with black letters, screw attached.

C. See Specification Section 260553 for additional requirements.

3.17. GROUNDING

A. All equipment shall be grounded and bonded in accordance with all state/local regulations, The National Electrical Code and as specified herein.

3.18. TELEPHONE WORK

A. Provide telephone raceways, outlets and backboards, as shown. Provide additional work as shown on drawings. Bond all raceways together at backboards and provide No. 6 ground wire extending from raceway bonds to cold water pipe, in 1/2 inch raceway. Carefully ream ends of all raceways.

3.19. PAINTING

A. Refer to Painting/Finishing specifications for requirements regarding field painting of exposed conduit. Any scratches, dents or rust spots in conduit electrical enclosures, panels, motor control or any other electrical items shall have the dents removed, and they, along with any rust spots or scratches, sanded and touched up with the same exact color paint as original finish.

3.20. ACCEPTANCE TESTING

A. Upon completion of work, the entire electrical system installed within this project shall be tested and shall be shown to be in perfect working condition, in accordance with the intent of the specifications and drawings. It shall be the responsibility of the Electrical Contractor to have all systems ready for operation and to have an electrician available to operate same in accordance with and under the supervision of the observation representative(s) of the Engineer. The Electrician shall be available to assist in removal of panel fronts, etc., to permit inspection as required.

B. The electrical sub-contractor shall include in bid price start-up assistance and training from a certified representative of the manufacturer for the following systems:
   1. SECTION 263213: GENERATOR SETS
   2. SECTION 263623: AUTOMATIC TRANSFER SWITCHES

3.21. OPERATION AND MAINTENANCE DATA

A. One set of marked “AS BUILT” drawings, three (3) sets of all equipment catalog and maintenance data and three (3) sets of all final shop drawings, on all equipment requiring same shall be turned over to owner. These items shall be bound in hard back book. Contractor shall explain and demonstrate all systems to Owner’s representative.

3.22. GUARANTY-WARRANTY

A. Furnish a written Guarantee-Warranty, countersigned and guaranteed by General Contractor,

stating:

1. That all work executed under this section will be free from defects of workmanship and materials for a period of one (1) year from date of final acceptance of this work.
2. Above parties further agree that they will, at their own expense, repair and replace all such defective work, and all other work damaged thereby, which becomes defective during the term of the Guaranty-Warranty.

END OF SECTION 260500

SECTION 260519 - POWER CONDUCTORS AND CABLES 51V-600V

PART 1 - GENERAL

1.1. DESCRIPTION

A. Power Wires and Cables

B. Low Voltage Wires and Cables

PART 2 - PRODUCTS

2.1. POWER WIRES AND CABLES - 600 VOLT

A. General: Conductors shall have current carrying capacities as per N.E.C. and with 600 volt insulation, #12 minimum except for controls and fixture wire. Conductors shall be copper.

B. General Application (see below for exceptions):
1. At or Below Grade (including within slab-on-grade):
   a. #8 or larger conductors:
      1) XHHW or RHH/RHW/USE stranded (in conduit).
   b. #10 or smaller conductors for circuits terminating at motors:
      1) THHN/THWN or XHHW stranded (in conduit).
   c. #10 or smaller conductors (excluding circuits terminating at motors):
      1) THHN/THWN or XHHW solid (in conduit).
2. Above Grade:
   a. #8 or larger conductors:
      1) THHN/THWN, XHHW or RHH/RHW/USE stranded (in conduit).
   b. #10 or smaller conductors for circuits terminating at motors:
      1) THHN/THWN, XHHW or RHH/RHW/USE stranded (in conduit).
   c. #10 or smaller conductors (excluding circuits terminating at motors):
      1) THHN/THWN, XHHW or RHH/RHW/USE solid (in conduit).
3. Power Wire and cable shall be as manufactured by Southwire, Rome, American Insulated Wire, Okonite, Phelps-Dodge, Amercable, Aetna or approved equal.

C. Class 1 Control Cabling (120VAC Control Circuits, Etc.)
1. Unless specified otherwise, Class 1 control cabling shall:
   a. Be rated for exposed cable tray installation.
   b. Be plenum rated (Class 1 Control cabling and Instrumentation cabling installed in conduit or exposed in cable tray in non-plenum areas is not required to be plenum-rated).
   c. Be UL-rated for the proposed application.
   d. Be multi-conductor with overall outer sheath as required by the application. The insulation of each conductor within the overall multi-conductor cable shall be uniquely color-coded. Ground conductors (when provided) within the multi-conductor cable shall have green insulation. Conductors with green insulation shall not be used for conductors other than ground.

e. Utilize copper conductors.
f. Have wire gauge as required to limit voltage drop to acceptable limits determined by the system supplier and to meet all applicable code requirements.
g. Where installed underground, within slab-on-grade or in exterior locations, be rated for wet locations.
h. Where required for specific systems, meet the specific requirements (conductor quantity, wire gauge, insulation type, shielding, etc.) of the system supplier.
i. Be rated for 600V.
j. Be industrial grade.
k. Have stranded conductors.
l. Have sunlight/oil-resistant PVC/Nylon insulation and jacket with ripcord.

2. Control cabling shall be as manufactured by Belden, AlphaWire or General Cable.

D. Fixture Wiring
1. Conductor Types:
a. Type TFFN or XFF.
2. Minimum Sizes:
a. For fixtures up to 300 watts: #16.
b. For fixtures over 300 watts up to 1500 watts: #14.
c. For fixtures over 1500 watts: as required.
d. Conductors to concrete pour fixtures: #12.
3. Fixture wire shall extend only from fixture to first junction, and not over 6 feet, except for concrete pour units.

2.2. WIRE CONNECTIONS:

A. All connector types:
1. Shall be properly rated for the proposed application by UL and per the manufacturer.

B. At Motor Connections (within motor terminal boxes):
1. On Unshielded Wire:
a. Single conductor per phase: shall be made with insulated set screw connectors or 3M 5300 Series 1kV Motor Lead Connections kits with mechanical lugs as required.
b. Multiple conductors per phase: shall be made with insulated mechanical lugs, rated for the associated motor cable types, by Polaris or Ilsco.
2. On Shielded Power Wire:
a. The braided shields and internal grounding conductors of shielded power (not instrumentation) cables shall be grounded at BOTH ends (at VFD/starter and at motor) with a termination kit provided by the cable supplier. This termination kit shall include a connection ring that makes contact around the full circumference of the braided shield, and connects all internal grounds to a common external ground point.

C. Other Dry locations:
1. On Wire larger than #10: shall be made with solderless, non-insulated compression-type connectors meeting requirements of Federal Specification WS-610e for Type II, Class 2

and shall be covered with Scotch #33 electrical tape so that insulation is equal to 150% of conductor insulation.

2. On Wire #10 and smaller: shall be made with one of the following:
   a. Ideal Wing Nuts or equal by 3M .
   b. Ideal Push-In Wire Connectors (for #12 and smaller only).

D. Other Wet/Damp locations:
   1. On Wire larger than #10: shall be made with underground/direct-burial, waterproof rated EPDM or TPE-insulated connectors by Ilsco, Burndy or T&B.
   2. On Wire #10 and smaller: shall be made with one of the following:
      a. Ideal Weatherproof or Underground Wire Connectors pre-filled with 100% silicone sealant as required by the application.

PART 3 - EXECUTION

3.1. GENERAL INSTALLATION

A. All wires and cables shall be installed in conduit unless specifically noted otherwise.

B. All joints and splices on wire shall be made with solderless connectors, and covered so that insulation is equal to conductor insulation.

C. No splices shall be pulled into conduit.

D. No conductor shall be pulled until conduit is cleaned of all foreign matter.

E. Wire and cable shall be neatly formed, bundled and tied in all panelboards, wireways, disconnect switches, pullboxes, junction boxes, cabinets and other similar electrical enclosures.

F. All wires and cables installed in underground or other wet locations shall be rated by the manufacturer for wet locations.

G. Network cabling shall be continuous from endpoint to endpoint and shall not be spliced unless specifically noted otherwise.

3.2. POWER WIRE AND CABLE INSTALLATION:

A. No power conductor shall be smaller than #12 except where so designated on the drawings or hereinafter specified.

B. Multi-wire lighting branches shall be used as indicated.

C. Where more than three current-carrying conductors are installed in a single raceway or cable, conductors shall be derated as indicated in NEC Table 310.15(B)(3)(a).

D. Raceways/cables shall generally not be installed exposed to sunlight on roofs unless specifically required. Where raceways or cables are installed exposed to sunlight on roofs, conductors shall be derated with ampacities adjusted per NEC Table 310.15(B)(3)(c).

E. In installing parallel power conductors, it is mandatory that all conductors making up the feeder be exactly the same length, the same size, the same type of conductor with the same insulation. Each group of conductors making up a phase or neutral must be bonded at both ends in an approved manner.

F. In installing overhead main power services, a minimum of 5'-0" of cable per run shall be extended beyond the weatherhead(s) for connection to service drop. Confirm exact requirements with local utility company.

3.3. WIRE CONNECTIONS

A. See Part 2 above for material types.

B. Aluminum Wire Connections:
   1. Where aluminum wiring is allowed, connections shall utilize compression fittings, no exceptions (Anderson Versa Crimp or equal).

C. Any stranded wire connection to wiring devices shall be made with crimp type terminals.

D. All electrical connections and terminals shall be tightened according to manufacturer's published torque-tightening values with calibrated torque wrenches as required to clearly indicate final torque value to the contractor. Where manufacturer's torque values are not provided, those specified in UL 486A & 486B shall be used.

E. All connections and connector types shall be installed in strict compliance with all requirements of the connector manufacturer.

F. Under no condition shall the specified conductors be connected to terminals rated less than 75°C. Where conductors sized #1 or smaller are shown to be terminated at equipment and the terminals of that equipment are rated for less than 75°C, contractor shall install junction box near equipment to capture the specified conductors, splice with compression connections (rated for a least 75°C) and extend conductors with ampacity rating as required by NEC (based on terminal temperature rating) to equipment terminals. The length of the conductors to be terminated shall be as directed by the AHJ but not less than 48 inches.

3.4. SHIELDED CABLE INSTALLATION

A. Shielded instrumentation (low voltage) cables:
   1. The outer foil of shielded instrumentation cables shall be grounded at the PLC/control panel end only (not at the field device end) with a termination kit as directed by the PLC/control panel supplier.

3.5. LOW VOLTAGE (LESS THAN 50V) CONTROL AND NETWORK CABLE INSTALLATION:

A. All wires and cables shall be installed in conduit unless specifically noted otherwise. Low voltage control and/or network cabling located within concealed, accessible ceiling spaces (such as above lay-in ceilings) may be run without conduit if the following requirements are met:

1. Cabling shall be plenum-rated, multi-conductor.
2. Cabling shall be supported by cable tray or with J-hook supports on intervals not to exceed 5'-0" on center. Cabling shall be supported solely from the cable tray or j-hooks supported from the building structure, without using piping, ductwork, conduit or other items as supports.
3. Cabling shall be properly bundled with plenum-rated Velcro straps on intervals not to exceed 30" on center.
4. Properly-sized conduit(s) shall be provided wherever cabling enters an inaccessible or exposed area (such as above gyp board ceilings or through walls). End bushings shall be provided on both ends of all raceway terminations. All fire/smoke barrier penetrations shall be made in accordance with a U.L. listed assembly.

3.6. CIRCUITS AND BRANCH CIRCUITS

A. Outlets shall be connected to branch circuits as indicated on drawings by circuit number adjacent to outlet symbols, and no more outlets than are indicated shall be connected to a circuit.

3.7. LABELING AND COLOR CODING OF WIRE AND CABLE

A. Refer to Specification Section 260553 for all labeling requirements.

B. A color coding system as listed below shall be followed throughout the network of branch power circuits as follows:

PHASE	120/208/240/ COLOR	120/240 HIGH LEG DELTA COLOR	277/480 VOLT COLOR
A	BLACK	BLACK	BROWN
B	RED	ORANGE (FOR HI-LEG)	ORANGE
C	BLUE	BLUE	YELLOW
NEUTRAL	WHITE	WHITE	GRAY
GROUND	GREEN	GREEN	GREEN

C. Where dedicated neutrals are installed for multi-wire branch circuits, the neutral conductors shall be color coded as follows:

PHASE	120/208/240/ COLOR	120/240 HIGH LEG DELTA COLOR	277/480 VOLT COLOR
NEUTRAL A	WHITE W/ BLACK TRACER	WHITE W/ BLACK TRACER	GRAY W/ BROWN TRACER
NEUTRAL B	WHITE W/ RED TRACER	WHITE W/ ORANGE TRACER (FOR HI-LEG NEUTRAL)	GRAY W/ ORANGE TRACER
NEUTRAL C	WHITE W/ BLUE TRACER	WHITE W/ BLUE TRACER	GRAY W/ YELLOW TRACER

D. Control Conductors: Shall be color coded by use of colored "tracers". No control circuit shall contain two identical conductors. For example, a set of five (5) control conductors for a pushbutton station represents one (1) control circuit which would require five (5) uniquely-colored control conductors.

3.8. TESTING

A. The insulation resistance of all feeder conductors (feeding electrical distribution equipment such as switchboards, panelboards, transfer switches, transformers, etc.) shall be tested at the load side of the feeder breaker with a 500-volt DC Megger Tester. Any feeder conductor with an insulation resistance less than 1 Mega ohm to ground shall be replaced by the contractor at the contractor's expense. All final test results shall be clearly documented (with date, time, feeder, results, test equipment, etc.), and the final test results shall be submitted to the design team for review.

END OF SECTION 260519

SECTION 260526 - GROUNDING

PART 1 - GENERAL

1.1. GENERAL

A. THE WORK UNDER THIS SECTION INCLUDES BUT IS NOT LIMITED TO GROUNDING OF THE FOLLOWING:
   1. Service Equipment.
   2. Transformers.
   3. Non-current carrying conductive surfaces of equipment.
   4. Metal Buildings.
   5. Structures.
   6. Other Equipment.

1.2. GENERAL REQUIREMENTS

A. All equipment, building steel, and main service shall be effectively and permanently grounded with a conductor cross section as required by the National Electrical Code and of capacity sufficient to insure continued effectiveness of the ground connections for fault current. Ground conductors shall be as short and straight as possible, protected from mechanical injury and, if practicable, without splice or joint.

B. All grounding connections shall be installed in accordance with the National Electrical Code and all local codes and requirements. Such codes shall be considered minimum requirements and the installation of the grounding system shall insure freedom from dangerous shock voltage exposure and provide a low impedance ground fault path to permit proper operation of overcurrent and ground fault protective devices.

PART 2 - PRODUCTS

2.1. CONDUCTORS

A. All grounding conductors shall be insulated with green colored, 600 volt insulation unless noted otherwise.

B. Motors having power supplied by single conductor wire in conduit shall be grounded through the conduit system. Flexible conduit shall be “jumpered” by an appropriate bonding conductor.

C. Supplemental grounding system conductors shall be bare, softdrawn, stranded, single conductor copper wire, and generally sized as follows (unless shown otherwise on plans):
   1. Switchgear, motor control centers, and power transformer #4/0 minimum or as shown on plans.
   2. Power panels, #2/0.
   3. Control panels and consoles, #4.
   4. Process Motors, #1/0.

5. Building Columns, #4/0.
6. Light Poles, #2.
7. Telephone Backboard & Cabinet ground busses, #2.

2.2. GROUNDING ELECTRODES

A. Grounding electrodes shall be copper-clad steel rods 3/4 inch in diameter and ten feet long. Where longer electrodes are necessary to reduce the ground resistance, Contractor shall provide sectional rods, connectors, drive heads, etc.

2.3. CONNECTIONS

A. All conductor-to-conductor, conductor-to-ground rod, conductor-to-structure, conductor-to-fence connections of #6 and larger sized conductors and underground ground connections shall be permanent exothermic welded connections (Cadweld or equal) unless otherwise noted on applicable drawings.

B. Connections to equipment shall be by bolted compression type lugs (except for motors). When the conductor is #6 and larger, the lug shall be joined to the conductor by an exothermic weld (Cadweld or equal).

C. Motors to be grounded by the grounding conductors run with the power conductors shall have a split-post grounding stud installed in the connection box.

D. Each cast pull box or junction box shall have a ground lug, connected to largest ground conductor to enter box.

E. Ground connections at conduit terminations shall be made by approved grounding bushings (see Raceways Specification Section for additional requirements).

2.4. MANUFACTURERS

A. Conduit clamps and connectors shall be manufactured by Raco, OZ., or Ercon.

B. Lugs shall be as manufactured by Square “D”, Burndy, or T and B.

C. Exothermic weld connections shall be as manufactured by Cadweld, or approved equal.

D. Ground rods shall be as manufactured by Joslyn or McGraw Edison.

E. Split post grounding shall be as manufactured by Burndy or T and B.

PART 3 - EXECUTION

3.1. MAIN SERVICE GROUND

A. The main service grounding electrode system shall consist of the following items bonded together by the grounding electrode conductor:
1. The main underground cold water pipe (metal).

2. The metal frame of the building.
3. Driven ground rods. Ground rods shall be embedded at the lowest point in the building and below the permanent moisture level. Ground rods shall be spaced a minimum of ten (10) feet apart and connected in parallel until resistance to ground does not exceed five (5) ohms.

B. The grounding electrode system shall be connected to the grounded conductor (neutral) on the supply side of the service disconnecting means by a grounding electrode conductor not smaller than that shown in Table 250.66 of the N.E.C. The main service equipment grounding conductor shall be connected to the grounding conductor on the supply side of the service disconnecting means in accordance with Table 250.122 of the N.E.C. for the ampere rating of the service entrance equipment. Where in a service entrance switchboard, the equipment grounding conductor shall not be less than 25% of the main bus rating. These connections shall be made inside the service entrance equipment enclosure.

3.2. TRANSFORMER GROUNDS

A. Dry type insulation transformers with a grounded conductor in the secondary shall be grounded in accordance with N.E.C. Section 250-26.

3.3. EXPOSED NON-CURRENT-CARRYING METAL PARTS

A. General: Ground connections to equipment or devices shall be made as close to the current carrying parts as possible, that is, to the main frame rather than supporting structures, bases or shields. Grounding connections shall be made only to dry surfaces that are clean and dry. Steel surfaces shall be ground or filed to remove all scales, rust, grease, and dirt. Copper and galvanized steel shall be cleaned to remove oxide before making welds or connections. Code size ground conductors shall be run in all power conduits and properly terminated at each end.

B. Motors: Exposed non-current-carrying metal parts, shall be grounded by a grounding conductor either run with power conductors, and/or separate grounding conductors. Drawings will show method(s) to be used. The ground conductors with all motor conductors shall be connected to the ground buss in the motor connection box. Jumper connections shall be installed between frames and rigid conduit for equipment having flexible conduit connections (sealtight). All AC motor grounds shall provide a low impedance path to ground. Connections from the supplemental grounding system (when specified) shall be made directly to the motor frame. Additionally, utilization equipment connected to the motor (pump, fan, mixer, etc.) shall be bonded to the motor with flexible braid-type bonding strap to ensure equalization of ground potentials.

C. Raceways & boxes: All raceways, conduits, armored or shielded cable and all exposed non-current carrying metal parts shall be grounded. Such items shall be bonded together and permanently grounded to the equipment ground buss. Metallic conduits shall be connected by grounding or clamps to ground buss. Flexible “jumpers” shall be provided around all raceway expansion joints. Bonding straps for steel conduit shall be copper. Jumper connections shall be provided to effectively ground all sections or rigid conduit connected into plastic pipe. No metallic conduit shall be left ungrounded. In conduit systems interrupted by junction or switch boxes where locknuts and bushings are used to secure the conduit in the box, the sections of

conduit and box must be bonded together. If conduit, couplings or fittings have a protective coating or non-conductive material, such as enamel, such coating must be thoroughly removed from threads of both couplings and conduit and the surface of conduit or fitting where the ground clamp is secured.

D. Enclosures: Metal conduits entering free standing motor control centers, switchboards or other free standing equipment shall be grounded by bare conductors and approved clamp. Any conduits entering low voltage (480 volts or below) equipment through sheet metal enclosure and effectively grounded to enclosure by double locknut or hub need not be otherwise bonded.

E. Equipment: In addition to equipment grounding provisions mandated by code requirements, additional equipment grounding provisions (including local ground rods, connections, etc.) shall be provided by the contractor as directed by equipment suppliers.

F. Both ends of ground busses in motor control centers, switchboards, etc., shall be separately connected to the main ground buss to form two separate paths to ground.

G. Fences and Grills: Fences and metal grills around equipment carrying voltage above 500 volts between phases shall be bonded together and to ground. Fences and grill work shall be grounded at every post, column, or support, and on each side of every gate.

3.4. ACCEPTANCE DOCUMENTATION AND TESTING

A. Contractor shall take and store photographs of all underground grounding system connections prior to burial of connections, for review by Engineer.

B. Upon completion of work, the entire ground system shall be shown to be in perfect working condition, in accordance with the intent of the Specifications.

C. Contractor shall measure the resistance between the main ground bonding jumper to true earth ground using the Fall of Potential method as described by ANSI/IEEE Standard 81 ("Guide for Measuring Earth Resistivity, Ground Impedance, and Earth Surface Potentials of an Earth System"). If the measured value is greater than five ohms, additional grounding electrodes shall be installed as described in Part 3.1 above. The final ground resistance value shall be submitted in writing, and documented via picture of the meter reading from the Fall of Potential test, to the Engineer prior to the final observation, and shall be included in final O&M documentation.

END OF SECTION 260526

SECTION 260533 - RACEWAYS

PART 1 - GENERAL

1.1. DESCRIPTION

A. THE WORK UNDER THIS SECTION INCLUDES BUT IS NOT LIMITED TO THE FOLLOWING:
1. Conduits
2. Conduit Fittings
3. Couplings & Connectors
4. Bushings
5. Raceway Hardware, Conduit Clamps & Supports
6. Watertight Entrance Seal Devices

PART 2 - PRODUCTS

2.1. CONDUITS

A. PVC-Coated Rigid Steel:
1. The PVC coated rigid metal conduit must be UL Listed. Hazardous location fittings, prior to plastic coating must be UL listed. All conduit and fittings must be new, unused material. Applicable UL standards may include: UL 6 Standard for Safety, Rigid Metal Conduit, UL514B Standard for Safety, Fittings for Conduit and Outlet Boxes.
2. The PVC-coated rigid metal conduit shall be ETL PVC-001 listed.
3. The conduit shall be hot dip galvanized inside and out with hot galvanized threads.
4. Form 8 Condulets®, 3/4" through 2" diameters, shall have a tongue-in-groove “V-Seal" gasket to effectively seal against the elements. The design shall be equipped with a positive placement feature to ease and assure proper installation. Certified results confirming seal performance at 15 psig (positive) and 25 in. of mercury (vacuum) for 72 hours shall be available.
5. A PVC sleeve extending one pipe diameter or two inches, whichever is less, shall be formed at every female fitting opening except unions. The inside sleeve diameter shall be matched to the outside diameter of the conduit.
6. The PVC coating on the outside of conduit couplings shall have a series of longitudinal ribs 40 mils in thickness to protect the coating from tool damage during installation.
7. Form 8 Condulets® shall be supplied with plastic encapsulated stainless steel cover screws.
8. A urethane coating shall be uniformly and consistently applied to the interior of all conduit and fittings. This internal coating shall be a nominal 2 mil thickness. Conduit or fittings having areas with thin or no coating shall be unacceptable.
9. The PVC exterior and urethane interior coatings applied to the conduit shall afford sufficient flexibility to permit field bending without cracking or flaking at temperatures above 30deg.F (-1deg.C).
10. All male threads on conduit, elbows and nipples shall be protected by application of a urethane coating.

11. All female threads on fittings or conduit couplings shall be protected by application of a urethane coating.
12. Independent certified test results shall be available to confirm coating adhesion per ETL PVC-001 standards under the following conditions:
    a. Conduit immersed in boiling water with a minimum mean time to adhesion failure of 200 hours. ASTM D870)
    b. Conduit and condulet exposure to 150deg F (65deg C) and 95% relative humidity with a minimum mean time to failure of 30 days. (ASTM D11513.
    c. The interior coating bond shall be confirmed using the Standard Method of Adhesion by Tape Test (ASTM D3359).
    d. No trace of the internal coating shall be visible on a white cloth following six wipes over the coating which has been wetted with acetone (ASTM D1308).
    e. The exterior coating bond shall be confirmed using the methods described in Section 3.8, NEMA RN1.
    f. After these tests the physical properties of the exterior coating shall exceed the minimum requirements specified in Table 3.1, NEMA RN1.
13. Water tight flex connectors used in areas where PVC coated metal conduit is utilized shall be PVC coated also.
14. Shall be as manufactured by Perma-Cote, Plastibond, Korkap, Ocal or Okote.

B. Rigid Galvanized Steel and I.M.C.:
1. Shall be galvanized outside and inside by hot dipping.
2. Shall be as manufactured by Republic, Wheatland, Triangle, Pittsburg Standard, Youngstown, Allied or equal.

C. E.M.T.:
1. Shall be Electro-Galvanized.
2. Shall be as manufactured by Republic, Wheatland, Triangle, Pittsburg Standard, Youngstown, Allied or equal.

D. Rigid Aluminum:
1. Shall be manufactured of 6063 Alloy, T-1 temper.
2. Shall be as manufactured by Republic, Wheatland, Triangle, Pittsburg Standard, Youngstown, Allied or equal.

E. Schedule 40 and 80 PVC:
1. Shall be composed of polyvinyl chloride and shall be U.L. rated type 40 or 80 for use with 90 degree rated conductors. Conduit shall conform to NEMA Standards and applicable sections of N.E.C.
2. The conduit manufacturer shall have had a minimum of 5 years experience in the manufacture of the products. Non-metallic raceways shall be as manufactured by Carlon, Triangle, Can-Tex, Allied or equal.

F. HDPE Innerduct
1. Shall be composed high density polyethylene and shall be orange in color, unless noted otherwise.
2. Shall be corrugated unless noted otherwise.
3. Shall be manufactured by Carlon, Ipex or equal.

G. Flexible Metallic Conduit:
   1. Shall be continuous spiral wound and interlocked galvanized material, code approved for grounding.

H. Liquidtight Flexible Metallic Conduit:
   1. Shall be galvanized steel-core sealtite, code approved for grounding.
   2. Shall have an outer liquidtight, nonmetallic, sunlight-resistant jacket over an inner flexible metal core.
   3. Shall be as manufactured by Electric-Flex, Anaconda or equal.

2.2. FITTINGS, COUPLINGS & CONNECTORS

A. Rigid Galvanized Steel and I.M.C. couplings and connectors shall be standard threaded type, galvanized outside and inside by hot dipping. Threadless and clamp type are not acceptable. Couplings/connectors shall be as manufactured by Raco, Efcor, or Appleton or equal.

B. All fittings, couplings and connectors (**including conduit seals, Meyers hubs, sealtite connectors, etc.**) used in areas where PVC-Coated Rigid Steel conduit is used shall also be PVC-coated.

C. All rain tight connectors shall be threaded Myers or approved equal, rated for outdoor application.

D. E.M.T. couplings and connectors shall be set screw, or steel compression type. All couplings and connectors shall be 720B, 730, 750B, or 760 series of Efcor or equal series of Raco. Pressure indented type connectors or cast metal will not be approved for any location. E.M.T. couplings and connectors shall be as manufactured by O-Z/Gedney, T&B, Efcor, Raco, Midwest or equal. E.M.T. fittings, couplings and connectors located within concrete (where allowed) shall be compression type and shall be adequately sealed with tape to ensure a concrete-tight seal.

E. Rigid Aluminum couplings and connectors shall be standard threaded type, of the same alloy as the associated conduit. Threadless and clamp type are not acceptable. Fittings shall be as manufactured by Thomas & Betts, Crouse-Hinds, Appleton, Pyle-National or equal.

F. All PVC couplings, adapters, end bells, reducers, etc., shall be of same material as conduit.

G. Liquidtight Flexible Metallic Conduit connectors shall be steel-core liquidtight with insulating throat or end bushing, designed for application with Liquidtight Flexible Metallic Conduit. Fittings shall be as manufactured by Efcor, Raco, Midwest or equal.

H. All LB unilets sizes 1 ¼” or larger shall have rollers.

I. Miscellaneous conduit fittings shall be as manufactured by Appleton, Crouse-Hinds, Pyle-National, Russell & Stoll or equal.

2.3. BUSHINGS

A. All non-grounding rigid bushings 1-1/4” and larger shall be the insulating type (O-Z/Gedney

type “BB” or equal by T&B, Midwest Electric or Penn Union).

B. All non-grounding rigid bushings 1” and smaller shall be threaded malleable iron with integral noncombustible insulator rated for 150°C. Non-grounding rigid conduit bushings shall be O-Z/Gedney type “B” or equal by T&B, Midwest Electric or Penn Union.

C. All grounding rigid bushings shall be threaded malleable iron with integral noncombustible insulator rated for 150°C. All grounding rigid conduit bushings shall be O-Z/Gedney type “BLG” or equal by T&B, Midwest Electric or Penn Union.

2.4. HARDWARE, CONDUIT CLAMPS AND SUPPORTS

A. All hardware such as expansion shields, machine screws, toggle bolts, “U” or “J” bolts, machine bolts, conduit clamps and supports shall be of corrosion resistant materials (stainless steel, aluminum, galvanized or plated steel, or other approved materials).

B. Hardware in contact with aluminum handrails, plates or structural members and all hardware in exterior, wet or corrosive areas shall be type 316 stainless steel or aluminum (with bitumastic paint coating to isolate aluminum from contact with concrete where necessary) unless specifically noted otherwise.

C. Supports in exterior, process, wet or corrosive locations shall be type 316 stainless steel or aluminum (with bitumastic paint coating to isolate aluminum from contact with concrete where necessary) unless specifically noted otherwise.

D. Supports in extremely corrosive environments (such as chlorine or fluoride storage rooms) shall be PVC-Coated steel unless specifically noted otherwise.

E. Hardware and conduit clamps shall be as manufactured by Efcor, Steel City, G.A., Tinnerman or equal.

2.5. WATERTIGHT ENTRANCE SEAL DEVICES

A. For new construction, seal devices shall consist of oversized sleeve and malleable iron body with sealing rings, pressure rings, sealing grommets and pressure clamps as required (O-Z/Gedney type FSK/WSK or equal).

B. For cored-hole applications, seal devices shall consist of assembled dual pressure disks with neoprene sealing rings and membrane clamps as required (O-Z/Gedney type CSM or equal).

PART 3 - EXECUTION

3.1. RACEWAY APPLICATION

A. Minimum Diameter: 3/4-inch.

B. Raceway Type: Raceway types shall be as specified below, unless indicated otherwise on drawings:
   1. Exterior, Exposed: Rigid Aluminum unless otherwise noted.

2. Exterior, Used for Instrumentation Circuits: See Below.
3. Other Exterior (Concrete-Encased or Direct Earth Buried): Schedule 40 PVC. PVC conduit shall convert to metallic conduit prior to exiting concrete-encasement or direct earth burial. See "transition" items below for additional requirements. Conduits shall be left exposed until after Engineer's observation.
4. Interior, Exposed:
   a. Hazardous Locations: Rigid Aluminum .
   b. Wet Locations (including, but not limited to, Pump Rooms, Areas with exposed piping, Dewatering Rooms, Wet Wells, Underground Vaults, and other similar locations): Rigid Aluminum .
   c. Dry Locations: Rigid Aluminum.
   d. Extremely Corrosive Locations (Chlorine Storage Rooms, Fluoride Storage Rooms and other similar areas): Schedule 80 PVC.
5. Interior, Concealed:
   a. Embedded inside Poured Concrete Walls, Ceilings or Floors, with a minimum of 2" of concrete between finished surface and outer wall of conduit on all sides, where no anchor bolts, screws or other similar items will be installed: Schedule 40 PVC. PVC conduit shall convert to metallic conduit (exact type as specified elsewhere within this section) prior to exiting poured concrete-encasement of wall, ceiling, floor or ductbank. See "transition" items below for additional requirements.
   b. Other Raceways Embedded inside Poured Concrete Walls, Ceilings or Floors (not meeting requirements above): PVC-Coated Rigid Steel
   c. Other Raceways: E.M.T.
6. Raceways used for Instrumentation Circuits:
   a. Typical Dry or Wet Locations: Rigid Aluminum .
   b. Underground or Locations Embedded inside Poured Concrete: PVC-Coated Rigid Steel.
   c. Extremely Corrosive Locations (Chlorine Storage Rooms, Fluoride Storage Rooms and other similar areas): PVC-Coated Rigid Steel.
7. Terminations at motors, transformers and other equipment which has moving or vibrating parts:
   a. Exterior or Wet Locations (including, but not limited to, Pump Rooms, Wet Wells, Underground Vaults, and other similar locations): Liquidtight Flexible Metallic Conduit (shall generally not exceed 24 inches in length) with watertight fittings.
   b. Dry, Interior Locations: Flexible Metallic Conduit (shall generally not exceed 24 inches in length).
8. Terminations at instruments:
   a. Liquidtight Flexible Metallic Conduit (shall generally not exceed 12 inches in length) with watertight fittings.
9. Terminations at fixtures mounted in grid-type ceilings:
   a. Flexible Metallic Conduit or MC cabling (shall generally not exceed 72 inches in length and shall run from junction box to fixture, not from fixture to fixture).
10. Transition from underground or concrete-encased to exposed:
   a. Convert PVC to PVC-Coated Rigid Steel utilizing PVC-Coated Rigid Steel 90 degree bends (and vertical conduits as required by application) prior to exiting concrete/grade (except at outdoor pull boxes and under freestanding electrical equipment, where terminations shall be by PVC end bells installed flush with

top of slab). Exposed portions of these coated conduits shall extend a minimum of 6" above floor level, and shall be installed at uniform heights.

3.2. RACEWAY INSTALLATION

A. General:

1. Follow methods which are appropriate and approved for the location and conditions involved. Where not otherwise shown, specified, or approved in a particular case, run all wiring concealed.
2. Where conduit crosses a structural expansion joint an approved conduit expansion fitting shall be installed.
3. Where any run of rigid aluminum conduit (including bends) exceeds 50' in length, an approved conduit expansion fitting shall be installed (beginning at center of run) at intervals not to exceed 50' on center.
4. A non-conductive polypropylene pull string, properly tied/secured at either end, shall be installed in all empty conduits.
5. Metal conduit field-cuts shall be cut square with a hacksaw and the ends reamed after threading.
6. PVC conduit field-cuts shall be made with hacksaw, and ends shall be deburred.
7. All PVC joints shall be made as follows:
   a. Clean the outside of the conduit to depth of the socket, and the inside of socket with an approved cleaner.
   b. Apply solvent cement as recommended by the conduit manufacturer to the interior of the socket and exterior of conduit, making sure to coat all surfaces to be joined.
   c. Insert conduit into the socket and rotate 1/4 to 1/2 turn and allow to dry.
8. All metallic conduit installed below grade or within concrete shall be painted with two (2) coats of asphaltum paint prior to installation.
9. Install ground wire sized per N.E.C. Table 250.122 in all conduits.
10. Use of running threads is absolutely prohibited. Conduit shall be jointed with approved threaded conduit couplings. Threadless and clamp type not acceptable.
11. Conduits shall be sized in accordance with latest National Electrical Code except when size shown on drawings.
12. Exposed, field-cut threads on all metal conduits shall be painted with zinc primer (for Galvanized Rigid or I.M.C.) or urethane paint (for PVC-Coated Rigid Steel) as recommended by conduit manufacturer .
13. Installation of PVC coated conduit systems shall be performed in strict accordance with the manufacturer's installation instructions. Damage to PVC coated conduit coating shall be touched up with patching compound as directed by manufacturer. To assure correct installation, the installer shall be certified by the manufacturer to install coated conduit.

B. Routing/Locating:

1. Exposed conduit runs shall be run level and plumb and shall, on interior of buildings, be run parallel and/or at right angles to building walls and/or partitions.
2. Conduit with an external diameter larger than 1/3 the thickness of a concrete slab shall not be placed in the slab. Conduits in slab shall not be spaced closer than 3 diameters on center.

3. Conduit run in ceiling spaces shall be run as high as possible, all at same level, and shall be supported from building structure. Do not support conduit from any other installation.
4. Conduit run within exterior CMU, concrete or other similar walls shall be run within the CMU cells / concrete structure / etc. Conduits shall not be run on the outside surface of CMU cells / concrete structure / etc. underneath exterior veneers / etc., which could cause a thermal break in the wall insulation or a future water intrusion problem.
5. Install conduit runs to avoid proximity to steam or hot water pipes. In no place shall a conduit be run within 6" of such pipes except where crossing is unavoidable, then conduit shall be kept at least 3" from the covering of the pipe crossed.
6. Before installing raceways for motors, HVAC equipment and other fixed equipment, check location of all equipment connections/terminal boxes with equipment supplier and locate and arrange raceways appropriately.
7. No conduit for instrumentation shall be run closer than 12 inches to parallel power conduits.
8. A minimum of 12" of clearance (or more as required by associated utility companies) shall be provided between the finished lines of exterior, underground conduit runs and exterior, underground utilities (gas, water, sewer, etc.).
9. Where any portion of raceway is installed in a wet environment (such as below grade) and located at a higher elevation than the raceway termination point in a dry environment, install watertight compound inside raceway at termination around cabling to prevent transfer of water through conduit system. Watertight compound shall be rated for the potential water head pressure, based on the assumption that ground water level would be at grade level.

C. Bends:
1. Do not make bends (in any raceway, including flexible conduits) that exceed allowable conductor bending radius of cable to be installed or that significantly restrict conductor flexibility.
2. All bends within concrete-encased ductbanks installed in exterior locations shall be long radius bends (24" minimum bending radius – varies with conduit diameter).
3. All bends in raceways containing multi-conductor power cables (such as shielded VFD cables) shall be long radius bends (24" minimum bending radius – varies with conduit diameter).
4. Where numerous exposed bends or grouped together, all bends shall be parallel, with same center and shall be similar in appearance
5. All PVC elbows, bends, etc., shall be either factory bends or made with an approved heat bender.

D. Support:
1. Anchor conduit securely in place by means of approved conduit clamps, hangers, supports and fastenings. Arrangement and methods of fastening all conduits shall be subject to Engineer's direction and approval. All conduits shall be rigidly supported (wire supports may not be used in any location). Use only approved clamps on exposed conduit.
2. Rigid Aluminum Conduits shall be supported at intervals not to exceed 5' on center.
3. Conduit in riser shafts shall be supported at each floor level by approved clamp hangers.
4. Right angle beam clamps and U bolts shall be specially formed and sized to snugly fit the outside diameters of conduits.

5. Where installed in seismic zones, suspended raceways shall be braced in two (2) directions as required to prevent swaying and excessive movement.
6. Raceways installed on top of flat roofing shall be supported a minimum of 3 ½" above roof with rubber block supports (Cooper B-Line Dura-Blok or equal). Installation shall be in strict accordance with support manufacturer's instructions and recommendations.

E. Terminations:
1. All conduit connections to sheet metal cabinets or enclosures located in exterior or wet locations shall terminate by use of rain tight hubs.
2. Where rigid or I.M.C. conduits enter sheet metal boxes, they shall be secured by approved lock nuts and bushings.
3. Where metal conduits enter outdoor pull boxes, manholes, under freestanding electrical equipment or other locations where direct metal-to-metal contact does not exist between enclosure and conduit, grounding bushings shall be installed. Each grounding bushing shall be connected to the enclosure ground and all other grounding bushings with properly sized grounding conductors.
4. Where E.M.T. enters sheet metal boxes they shall be secured in place with approved insulating fittings.
5. Where PVC enters outdoor pull boxes, manholes or under freestanding electrical equipment, PVC end bells shall be installed.
6. Where conduit terminates in free air such that associated cabling/circuitry becomes exposed (such as at cable trays, etc.), conduit shall generally terminate in a horizontal orientation (to prevent dust/debris/etc. from entering conduit system). Where vertical conduit termination is necessary, the termination shall be provided with cord-grip conduit terminations to seal the conduit system.
7. Conduit ends shall be carefully plugged during construction.
8. Permanent, removable caps or plugs shall be installed on each end of all empty raceways with fittings listed to prevent water and other foreign matter from entering the conduit system.

F. Penetrations:
1. All fire/smoke barrier penetrations shall be made in accordance with a U.L. listed assembly. Refer to drawings and other specifications for additional requirements.
2. All penetrations shall be at right angles unless shown otherwise.
3. Structural members (including footings and beams) shall not be notched or penetrated for the installation of electrical raceways unless noted otherwise without specific approval of the structural engineer.
4. Dry-packed non-shrink grout or watertight seal devices shall be used to seal openings around conduits at all penetrations through concrete walls, ceilings or aboveground floors.
5. All raceways entering structures shall be sealed (at the first box or outlet) with polyurethane grout compound that expands to form a flexible foam seal that prevents the entrance of gases or liquids from one area to another (Prime Resins Prime-Flex or equal).
6. All raceways passing through concrete roofs or membrane-waterproofed walls or floors shall be provided with watertight seals as follows:
   a. Where ducts are concrete encased on one side: Install watertight entrance seal device on the accessible side of roof/wall/floor as directed by equipment manufacturer.

b. Where ducts are accessible on both sides: Install watertight entrance seal device on each side of roof/wall/floor as directed by equipment manufacturer.

7. All raceways passing through walls of rooms containing/storing noxious chemicals (chlorine, ammonia, etc.) or through hazardous locations shall be sealed with conduit seals (Crouse-Hinds type EYS or equal).
8. All raceways terminating into electrical enclosures/devices/panels/etc. located in hazardous locations shall be sealed with conduit seals (Crouse-Hinds type EYS, EZS or equal) within 18" of the termination.

G. Exterior Electrical Ductbanks:

1. Where exterior electrical concrete-encased ductbanks are indicated on drawings, conduit runs between buildings or structures shall be grouped in concrete-encased ductbanks as follows:
   a. A minimum of 3" of concrete shall encase each side of all ductbanks.
   b. A minimum of 1 ½" of separation shall be provided between each conduit within ductbanks. PVC spacers shall be installed at the necessary intervals prior to placement of concrete to maintain the required spacing and to prevent bending or displacement of the conduits.
   c. Top of concrete shall be a minimum of 30" below grade. A continuous magnetic marking tape shall be buried directly above each ductbank, 12" below grade.
   d. Exact routing of ductbanks shall be field verified and shall be modified as necessary to avoid obstruction or conflicts.
   e. Underground electrical raceways shall be installed to meet the minimum cover requirements listed in NEC Table 300.5. Refer to drawings for more stringent requirements.

END OF SECTION 260533

SECTION 260534 - OUTLET BOXES, JUNCTION BOXES, WIREWAYS

PART 1 - GENERAL

1.1. DESCRIPTION

A. Outlet and Junction Boxes

B. Pull Boxes

C. Wireways

PART 2 - PRODUCTS

2.1. OUTLET BOXES & JUNCTION BOXES (THROUGH 4-11/16")

A. Sheet Metal: Shall be standard type with knockouts made of hot dipped galvanized steel as manufactured by Steel City, Raco, Appleton, Bowers or equal.

B. Cast: Shall be type FS, FD, JB, GS, or SEH as required for application as manufactured by O-Z/Gedney, Appleton, or equal.

C. Nonmetallic: Shall be type Polycarbonate/ABS construction as required for application with non-metallic quick-release latches as manufactured by Hoffman, O-Z/Gedney, Appleton, or equal.

2.2. JUNCTION AND PULL BOXES (LARGER THAN 4-11/16")

A. Oil-Tight JIC: Shall be Hoffman Type CH box or approved equal.

B. Galvanized Cast Iron or Cast Aluminum: Shall be O-Z/Gedney or approved equal.

C. Stainless Steel: Shall be as manufactured by O-Z/Gedney, Hoffman or approved equal. Boxes shall have continuous hinges, seamless foam-in-place gaskets and screw-down clamps.

D. Nonmetallic: Shall be type Polycarbonate/ABS construction as required for application with non-metallic quick-release latches as manufactured by Hoffman, O-Z/Gedney, Appleton, or equal. Boxes shall have hinged covers and screw-down clamps.

E. Wireways: Shall be standard manufacturer's item as manufactured by Hoffman, Square "D", Burns, B & C or equal. Wireways shall have hinged covers and screw-down clamps.

F. Pre-cast Polymer Concrete Below-Grade Hand Holes & Pull Boxes:
   1. Enclosures, boxes and cover are required to be UL Listed and conform to all test provisions of ANSI/SCTE 77 "Specifications For Underground Enclosure Integrity" for Tier 15 applications (15,000lb design load and 22,500lb test load) unless noted otherwise.

2. All covers shall have a minimum coefficient of friction of 0.05 in accordance with ASTM C1028 and the corresponding Tier level shall be embossed on the top surface.
3. Cover shall be bolt-down include factory-labeling to read “Electric”, “Communications” or other as directed.
4. Hardware shall be stainless steel.
5. Shall be Quazite PG/LG Style or approved equal.

PART 3 - EXECUTION

3.1. APPLICATION

A. General
1. All boxes and wireways shall be of sufficient size to provide free space for all enclosed conductors per NEC requirements. Fill calculations shall be performed by contractor per NEC requirements.

B. Outlet Boxes & Junction Boxes (through 4-11/16”)
1. Sheet metal boxes shall be used on concealed work in ceiling or walls.
2. Cast boxes shall be used wherever Rigid or I.M.C. conduits are installed.
3. All boxes installed in extremely corrosive areas (such as chlorine and fluoride storage rooms) where non-metallic raceways are used shall be non-metallic.
4. Except when located in exposed concrete block, switch and receptacle boxes shall be 4" square for single gang installation. Appropriate gang boxes shall be used for mounting ganged switches.
5. When installed in exposed concrete block, switch and receptacle boxes shall be square type designed for exposed block installation.
6. Ceiling outlet boxes shall be 4" octagon 1-1/2" deep or larger required due to number of wires.
7. Boxes installed in hazardous locations shall be explosion-proof rated for the associated application, constructed of copper-free cast aluminum.

C. Junction & Pull Boxes (larger than 4-11/16”)
1. For all below grade exterior use and elsewhere as shown:
   a. In areas subject to future vehicular traffic: shall be galvanized cast iron (rated AASHTO H-20 Loading unless noted otherwise).
   b. In areas not subject to vehicular traffic: shall be galvanized cast iron or pre-cast polymer concrete (rated for Tier 15 Loading unless noted otherwise).
2. All boxes installed exposed in exterior or wet areas shall be stainless steel (NEMA 4X).
3. All boxes installed exposed in corrosive areas shall be stainless steel (NEMA 4X).
4. All boxes installed in extremely corrosive areas (such as chlorine and fluoride storage rooms) where non-metallic raceways are used shall be non-metallic.
5. Padmounted Pull Boxes shall be installed as shown on Plans or as required by project conditions. Transclosure-style Padmounted boxes shall be installed wherever required by the quantities and sizes of conductors. Contractor shall submit all Padmounted Pull Box types prior to ordering for engineer’s review and comment.
6. Boxes installed in hazardous locations shall be explosion-proof rated for the associated application, constructed of copper-free cast aluminum.
7. All others shall be oil tight JIC box not less than 16 gauge.

3.2. INSTALLATION

A. General
1. All boxes and wireways shall be securely anchored.
2. All boxes shall be properly sealed and protected during construction and shall be cleaned of all foreign matter before conductors are installed.
3. All boxes and wireways shall be readily accessible. Contractor shall be responsible for furnishing and installing access panels per architect's specifications. Locations shall be as directed by the architect as required to make boxes, wireways, electrical connections, etc. accessible where above gypsum board ceilings or in other similar locations.
4. All metallic boxes and wireways shall be properly grounded.
5. Refer to Specification Section 260553 for identification requirements.

B. Outlet Boxes & Junction Boxes (through 4-11/16")
1. Boxes shall be provided with approved 3/8" fixture studs were required.
2. Recessed boxes for wiring devices, surface fixtures, or connections, shall be set so that the edge of cover comes flush with finished surface.
3. There shall be no more knockouts opened in any sheet metal box than actually used.
4. Any unused opening in cast boxes shall be plugged.
5. Back to back boxes to be staggered at least 3 inches.
6. Under no circumstances shall through-the-wall boxes be used.

C. Junction & Pull Boxes (larger than 4-11/16")
1. Pull boxes shall be installed as indicated on plans and/or as required due to number of bends, distance or pulling conditions.
2. Boxes to be imbedded in concrete shall be properly leveled and anchored in place before the concrete is poured.
3. All pull boxes and/or junction boxes installed exterior below grade, shall have their tops a minimum of 1-1/2 inches above surrounding grade and sloped so that water will not stand on lid. A positive drain shall be installed, to prevent water accumulation inside.
4. Above grade pull boxes shall be installed on concrete anchor bases as shown on Plans.

D. Wireways and/or wall-mounted equipment
1. Mount each wireway to channels of the same metal type as the wireway.
2. Conductors serving a wireway shall be extended without reduction in size, for the entire length of the wireway. Tap-offs to switches and other items served by the wireway shall be made with ILSCO type GTA with GTC cap.

END OF SECTION 260534

SECTION 260553 - ELECTRICAL IDENTIFICATION

PART 1 - GENERAL

1.1. DESCRIPTION

A. Wire and cable identification.

B. Pullbox & Junction Box Identification

C. Electrical distribution & utilization equipment identification.

D. Emergency and Standby Power receptacle identification.

E. Instrument and control device identification.

F. Raceway identification.

PART 2 - PRODUCTS

2.1. WIRE AND CABLE IDENTIFICATION

A. Intermediate Locations:
1. Wires and cable labels shall be white, thermal transfer, halogen-free, flame-retardant marker plates (sized to accommodate three lines of text) permanently affixed to the associated cable with UV-resistant plastic wire ties. Labels shall be Panduit #M200X/300X series or equal.

B. Circuit/Cable Termination Locations:
1. Wires and cable labels shall be non-ferrous identifying tags or pressure sensitive labels unless noted otherwise.

2.2. ELECTRICAL DISTRIBUTION & UTILIZATION EQUIPMENT IDENTIFICATION

A. Labels on electrical distribution & utilization equipment shall be black-on-white engraved Bakelite nameplates permanently affixed to the equipment with rivets or silicone adhesive unless noted otherwise.

2.3. EMERGENCY AND STANDBY POWER RECEPTACLE IDENTIFICATION

A. Receptacles fed from emergency or standby power sources (such as emergency generators) shall be provided with factory-marked engraved coverplates as follows:
1. Emergency System source: Red engraved lettering to read “EMERGENCY”.
2. Legally-Required or Optional Standby Generator source:
   a. If only part of facility is fed with generator backup: Black engraved lettering to read “FED FROM GENERATOR”.

b. If entire facility is fed with generator backup: No "….GENERATOR…" label required.

2.4. INSTRUMENT AND CONTROL DEVICE IDENTIFICATION

A. Instruments and control device labels shall be black-on-white engraved Bakelite nameplates permanently affixed to the equipment or the adjacent, visible mounting surface with silicone adhesive or stainless steel wire ties.

2.5. RACEWAY IDENTIFICATION

A. Raceway labels shall be white thermal transfer marker plates permanently affixed to the associated raceway with stainless steel wire ties, with two wire ties (one on either end of marker plate to provide a flush installation) where possible. Labels shall be Panduit #M300X series or equal.

PART 3 - EXECUTION

3.1. GENERAL

A. Any proposed deviation in identification methods and materials from those described herein shall be submitted to Engineer for review and comment prior to installation.

B. Contractor shall provide all labeling or identification required by applicable local, state and national codes. These specifications do not intend to itemize all code-required labeling or identification requirements.

C. All labels/identification shall be positioned such as to be readable from the normal perspective without adjusting wiring/cables/labels. For example, labels/identification of wires/cables within cable trays shall be positioned to point towards the viewer (typically downward for overhead cable trays, or upward for cable trays within trenches).

D. All labels/identification (except for handwritten labels on concealed pullbox/junction box covers as noted below) shall be typewritten/printed/engraved in a neat, workmanlike, permanent, legible, consistent and meaningful manner. Labels shall not be handwritten unless specific approval is granted by engineer.

3.2. WIRE AND CABLE IDENTIFICATION

A. General:
1. Where cabling is exposed (such as within cable trays), provide two wire ties per cable (one on either end of marker plate to provide a flush installation). Where cabling is concealed (such as within pullboxes/wireways), one wire tie per cable will be acceptable.

B. Intermediate Locations:
1. Thermal transfer labels shall be securely fastened to all wiring and cabling in the following locations:
   a. Wireways
   b. Pullboxes/Junction boxes larger than 4-11/16"

c. Pullboxes/Junction boxes through 4-11/16" where wires and cables are not easily identifiable via the color coding and box labeling
d. Vaults & Manholes
e. Approximately every 50 feet within cable trays (especially at locations where cables exit or diverge). Labels within cable trays shall be grouped (rather than being pre-labeled on cables and pulled into cable trays).
f. Other similar intermediate locations.

2. Labels shall be stamped or printed with the following data so that the feeder or cable can be readily identified and traced:
   a. From where the circuit originates (including panel designation and circuit number):
      1) Ex: "FROM: PP-A CIR. 3 (IN MAIN ELEC ROOM)"
   b. To where the circuit extends (using the common name of the equipment):
      1) Ex: "TO: RTU-6 (ON ROOF)"
   c. The purpose of the circuit:
      1) Ex: "POWER"
   d. The set number (If parallel power feeds are used).
      1) Ex: "SET NO. 3 OF 4"

C. Circuit/Cable Termination Locations:
1. Where multiple termination points exist within a circuit origination point (panelboard, switchboard, MCC, starter, etc.) or other similar circuit endpoint (control panel, etc.), labels shall be securely fastened to all ungrounded and neutral conductors to clearly identify the terminal and/or circuit number associated with each conductor. For example, within lighting panels, each phase and neutral conductor shall be labeled near the terminals at a clearly visible location with the associated circuit number(s), so that if all conductors were unterminated, the labels would clearly indicate which conductor was associated with each circuit.

D. Refer to Specification Section 260519 for all color-coding requirements of wires and cables.

3.3. PULLBOX & JUNCTION BOX IDENTIFICATION

A. Concealed pullboxes/junction boxes:
1. Front surface of all pullbox/junction box covers in concealed areas (such as above lay-in ceilings) or within mechanical/electrical rooms (and other similar areas where appearance of boxes is not an issue) shall be neatly marked with the ID of circuits/cables contained with permanent black marker on cover of box (Ex: "RP-1A Cir. 1, 2 & 3"). Additionally, front surface of box shall be painted red where box contains fire alarm system cabling.

B. Exposed pullboxes/junction boxes:
1. Interior surface of all pullbox/junction box covers in exposed areas shall be labeled "Power", "Telecommunications", "Fire Alarm" or with other similar general text neatly with permanent black marker to indicate function of box. Circuit/cable labeling within box (see above) shall identify specific cables contained. Additionally, interior surface of cover shall be painted red where box contains fire alarm system cabling.

C. Where pullboxes/junction boxes are named on contract documents (Ex:"PULLBOX #3"), an engraved nameplate shall be installed on the front surface of the box to identify the name.

3.4. ELECTRICAL DISTRIBUTION & UTILIZATION EQUIPMENT IDENTIFICATION

A. General:
1. All new and existing equipment modified by this project shall include arc-flash warning labels in accordance with NEC article 110.16.

B. All Panels, Motor Control Centers, Switchboards, Switchgear, Transformers, Etc.:
1. Engraved nameplates identifying name of equipment, nominal voltage and phase of the equipment and where the equipment is fed from shall be installed on front surface of all panels, motor control centers, switchboards, switchgear, transformers, etc.:
   a. Ex: First Line: "NAME: RP-A", Second Line: "120/208V-3Ø-4W", Third Line: "FED FROM: PP-A CIR. 4 (IN MAIN ELEC ROOM)"
2. Refer to Panelboard Specification Sections for additional labeling requirements (circuit directory cards, permanent circuit labels, permanent circuit numbers, etc.) required inside panelboards.

C. Safety/Disconnect Switches and Utilization Equipment (HVAC Equipment, Pumps, Powered Valves, Control Panels, Starters, Etc.)::
1. Engraved nameplates identifying equipment being fed and where the equipment is fed from shall be installed on front surface of all disconnect switches (including both visible blade type switches and toggle-type switches) and on utilization equipment (where not clearly identified by immediately adjacent local disconnect switch):
   a. Ex: First Line: "RTU-6", Second Line: "FED FROM: PP-A CIR. 5"
2. Where safety/disconnect switches are installed on the load side of variable frequency drives, the safety/disconnect switch shall be furnished with an additional engraved nameplate to read: "WARNING: TURN OFF VFD PRIOR TO OPENING THIS SWITCH".
3. Safety/Disconnect switches feeding equipment that is fed from multiple sources (such as motors with integral overtemperature contacts that are monitored via a control system) and Utilization Equipment fed from multiple sources shall be furnished with an additional BLACK-ON-YELLOW engraved nameplate to read: "WARNING: ASSOCIATED EQUIPMENT FED FROM MULTIPLE SOURCES – DISCONNECT ALL SOURCES PRIOR TO OPENING COVER".

D. Emergency Systems:
1. A sign shall be placed at the service entrance equipment (and at any remote shunt trip operators, or similar, for service equipment) indicating the type and location of on-site emergency power sources (such as generators, central battery systems, etc.) per NEC requirements.
2. All boxes and enclosures (including transfer switches, generators, power panels, junction boxes, pullboxes, etc.) dedicated for emergency circuits shall be permanently marked with white-on-red engraved nameplates so they will be readily identified as a component of an emergency circuit or system.

E. Services:

1. All Service Equipment:
   a. Engraved nameplates identifying maximum available fault current, including date the fault current calculation was performed, in accordance with NEC article 110.24.
      1) Ex: First Line: "AVAILABLE FAULT CURRENT: 16,154 AMPS", Second Line: "DATE CALCULATED: JULY 8, 2013"
   b. All service entrance equipment shall be clearly labeled as being service entrance rated.
2. Where a building or structure is supplied by more than one service (or any combination of branch circuits, feeders and services), a permanent plaque or directory shall be installed at each service disconnect location denoting all other services, feeders & branch circuits supplying that building or structure and the area served by each, per NEC requirements.

F. Generators:
   1. Generators shall be labeled with engraved nameplates identifying name of equipment.

3.5. EMERGENCY AND STANDBY POWER RECEPTACLE IDENTIFICATION

A. Receptacles fed from emergency or standby power sources (such as emergency generators) shall be provided with factory-marked engraved coverplates as described above.

3.6. INSTRUMENT AND CONTROL DEVICE IDENTIFICATION

A. New Instruments and control devices (whether furnished by contractor or not) shall be labeled with black-on-white engraved nameplates permanently affixed to the equipment or to the adjacent, readily-visible mounting surface with silicone adhesive or stainless steel wire ties.
   1. Instruments and process control devices (float switches, etc.) shall be labeled with instrument name and, where available, instrument ID number.
   2. Pushbutton stations shall be labeled with equipment being controlled. Labels shall be installed on front surface (or adjacent mounting surface) of all pushbutton stations.
   3. Thermostats and other similar HVAC control devices installed in process areas shall be labeled with equipment being controlled. Labels shall be installed on front surface (or adjacent mounting surface) of all thermostats and other similar HVAC control devices.

3.7. RACEWAY IDENTIFICATION

A. Each exposed raceway shall be labeled at the point where it becomes concealed, such as where it enters a concrete floor slab, a concrete wall, the ground, etc.

B. Each raceway entering in-grade or on-grade pullboxes/junction boxes, where the conduits are only visible inside the box, shall be labeled within the box at the point where the raceway becomes concealed.

C. Raceway nameplates shall identify:
   1. The location of the other end of the raceway ("TO MCC-1" or similar). If the other end of the raceway is at an intermediate, named pullbox ("INSTRUMENTATION PULLBOX #4" or similar), that pullbox name shall be labeled rather than the endpoint of the circuitry.

3.8. OTHER IDENTIFICATION

A. Factory-engraved coverplates identifying functions of light switches and other similar devices shall be installed where so required by plans/specifications.

END OF SECTION 260553

SECTION 262726 - WIRING DEVICES

PART 1 - GENERAL

1.1. DESCRIPTION

A. Wiring Devices

B. Plates

C. Finishes

PART 2 - PRODUCTS

2.1. WIRING DEVICES AND PLATES

A. Switches shall be AC type, extra-heavy duty industrial grade (unless otherwise shown) of ratings shown on drawings. Switches shall be as manufactured by Hubbell, P & S, Sierra, Bryant, GE, Arrow Hart or equal.

B. Receptacles shall have blade configuration and shall be extra-heavy duty industrial grade (unless otherwise shown) of current and voltage rating as shown on drawings. Receptacles shall be as manufactured by Hubbell, P & S, Sierra, Bryant, GE, Arrow Hart or equal.

C. All GFCI-type receptacles shall continuously self-test and shall trip/deny power if the receptacle does not provide proper GFCI protection or if the line/load terminations are miswired and shall provide visual indication of power status, trip conditions, ground fault conditions and end-of-life status.

D. Each wiring device shall have a plate (see “Finishes” section below for specific requirements).

2.2. FINISHES

A. All wiring devices (switches, receptacles, etc.) shall be colored to match the coverplates described below. For instance, all items covered by stainless steel, aluminum or malleable iron plates shall be gray in color.
   1. Exceptions:
      a. Emergency wiring devices shall be red.
      b. Isolated ground wiring devices shall be orange.

B. Coverplates for recessed, wall-mounted electrical items (switches, receptacles, telephone outlets, etc.) shall be stainless steel unless shown otherwise.

C. Coverplates, trim rings, etc. for recessed, floor-mounted electrical items (floor outlets, underfloor duct junctions, etc.) shall match finish of building hardware (302/304 stainless steel, brass, etc.) in area installed.

D. Coverplates for exposed electrical items (switches, receptacles, telephone outlets, etc.) shall be of same material as exposed boxes (see Outlet Box Specification for required material type) and shall have beveled edges.

E. Coverplates for receptacles in wet locations shall be metallic, in-use type, rated for wet locations per NEC requirements unless noted otherwise.

F. See “Electrical Identification” specification section for coverplate labeling requirements.

PART 3 - EXECUTION

3.1. GENERAL MOUNTING

A. Symbols on drawings and mounting heights are approximate. The exact locations and mounting heights shall be determined on the job, and it shall be the Contractor's responsibility to coordinate with all trades to secure correct installation. For example, Contractor shall coordinate exact mounting heights over counters, in or above backsplashes, in block walls, and at other specific construction features.

B. Verify all door swings with Architectural. Locate boxes for light switches within four inches of door trim on swing side (not hinge side) of door.

C. Devices and associates plates shall not be used as support; outlet boxes shall be rigidly supported from structural members.

D. Mount all straight-blade receptacles vertically with ground pole up, unless specifically noted otherwise.

E. Unless otherwise shown or required by local handicap codes, centerline of outlet boxes shall be the following distances above the finished floor unless otherwise noted.
1. Receptacles and telephone outlets in offices and other finished areas: 1’-6”
2. Receptacles and telephone outlets in equipment rooms and other unfinished areas: 4’-0”
3. Receptacles over counters: As Noted
4. Switches, general: 4’-0”
5. Push-button, etc., general: 4’-0”

END OF SECTION 262726

SECTION 262816 - SAFETY SWITCHES AND FUSES

PART 1 - GENERAL

1.1. DESCRIPTION

A. Safety Switches

B. Fuses

C. Branch Feeders

D. Feeders

PART 2 - PRODUCTS

2.1. SAFETY SWITCHES

A. Safety switches shall be quick-make, quick-break, NEMA heavy duty type HD, fused or nonfused as shown. Switch blades shall be fully visible in the off position.

B. Safety switches shall be furnished with transparent internal barrier kits to prevent accidental contact with live parts. Barriers shall provide finger-safe protection when the switch door is open and shall allow use of test probes and removal of fuses without removing barrier.

C. Fused switches shall have provisions for class R, rejection type fuses.

2.2. FUSES (600V)

A. Fuses for all branch switches shall be Bussman Mfg. Co., Dual Element, Class “R” Fusetron.

B. Fuses for main switch/switches shall be Bussman Mfg. Co. Hi-Cap.

2.3. MANUFACTURER

A. Safety switches shall be as manufactured by Square 'D', G.E., Siemens or Cutler Hammer.

B. Fuses shall be as manufactured by Bussman Mfg. Co. or equal.

PART 3 - EXECUTION

3.1. SAFETY SWITCHES

A. Safety switches shall be installed as shown on the plans and in accordance with N.E.C.

B. Locations shown for safety switches on plans are diagrammatical only. Exact locations shall be field coordinated by contractor as required to provide code-required clearances.

C. Switch enclosures shall be rated NEMA I indoors in dry locations and NEMA 4 stainless steel outdoors and in wet or process areas.

D. Adequate support shall be provided for mounting safety switches. Safety switches shall not be mounted to the associated equipment (unless the safety switch is furnished with the equipment).

3.2. FUSES

A. Fuses shall be sized as shown on drawings, unless a smaller size is required by the associated equipment supplier, in which case the contractor shall provide fuses sized as directed by the associated equipment supplier at no additional cost.

B. Provide not less than one spare set of fuses for each size used. Provide an additional spare set for each five sets of same size fuses used.

END OF SECTION 262816

SECTION 262900 - MANUFACTURED CONTROL PANELS

PART 1 - GENERAL

1.1. SCOPE

A. This section describes control stations, PLC panels, motor control panels, manufactured control panels, and other similar panels specified herein. Specifications herein are intended as an extension of requirements in other Divisions of these specifications where reference is made to Electrical Specifications.

1.2. DEFINITIONS

A. "Control Stations": Enclosures (with all required accessories) containing only door-mounted pushbuttons, indicator lights and/or selector switches (no electronic components or starter/controller equipment).

B. "Control Panels": Enclosures (with all required accessories) containing equipment/devices other than door-mounted pushbuttons, indicator lights and/or selector switches (such as electronic components, starter/controller equipment, etc.).

1.3. SUBMITTALS

A. Provide the following for each control panel:
   1. A job-specific, custom wiring diagram
      a. The wiring diagram shall clearly show all components (whether the components are mounted internal or external to the control panel enclosure).
      b. All wires and terminal blocks shall be clearly labeled.
      c. Diagram shall be in accordance with NEMA/ICS standards.
   2. Size, type and rating of all system components.
   3. Unit frontal elevation and dimension drawings.
   4. Internal component layout diagrams.
   5. Manufacturer's product data sheets for all components.

B. A Bill of Materials shall be included with catalog information on all components.

C. Information shall be included on any proprietary logic component sufficient to demonstrate its ability to perform the required functions.

D. The following calculations shall be submitted:
   1. Thermal calculations showing amount of air conditioning or ventilation and heating required for each control panel, per ambient requirements listed below and operating temperature limitations of all equipment/devices within each control panel. Where possible, forced air ventilation shall be utilized rather than air conditioning. Panel shall be oversized, interior equipment/devices shall be derated, and solar shielding shall be provided as required to allow the use of forced air ventilation as the cooling method.

a. Thermal calculations used for sizing cooling/ventilation systems for each control panel located in exterior or non-conditioned spaces shall assume:
   1) Ambient exterior air temperature ranges of -5 degrees F to 105 degrees F.
   2) Full solar contact where applicable (not applicable where enclosures are fully protected from solar contact using solar shields separated from panel enclosure with standoffs or similar).
   3) No wind.
   4) Heat loss from interior equipment (electronics, etc.) per equipment supplier's information.

b. Thermal calculations used for sizing heating systems for each control panel shall assume:
   1) Ambient exterior air temperature ranges of -5 degrees F to 105 degrees F.
   2) No heat loss by interior components of control panel.
   3) No solar gain on exterior of control panel.
   4) Doubling of heating wattage required to account for wind where control panels are located outdoors.
   5) Minimum temperature difference (due to heating) of 10 degrees F to prevent condensation, regardless of equipment temperature limitations.

2. Load calculations showing the sizing of all power supplies provided (with spare capacity as specified).
3. Load calculations showing the sizing and anticipated runtime of all Uninterruptible Power Supply systems provided (with spare capacity as specified).

PART 2 - PRODUCTS

2.1. GENERAL

A. Control panels shall be Underwriters' Laboratories labeled by the panel manufacturer. Control panel manufacturers not capable of applying the U.L. label to their products are unacceptable.

B. All human interface equipment/devices (indicator lights, selector switches, pushbuttons, time switches, displays, keypads, and other similar items used for control, adjustments or monitoring) shall be mounted on the non-energized side of enclosure door(s) in such a way as to be accessible without exposing the user to energized parts.

2.2. RATINGS

A. All Control Panels shall have short circuit current ratings at least equal to the lesser of the following, unless noted otherwise on plans:
   1. The short circuit current rating of the electrical distribution equipment that feeds the Control Panel.
   2. 150% of the available fault current at the Control Panel as determined by a Short Circuit Current study prepared by a licensed professional electrical engineer.

B. All equipment/devices installed within control panels shall be rated to operate in ambient temperatures of 50 degrees C (122 degrees F) or higher.

2.3. ENCLOSURES

A. All enclosures (with any required accessories or auxiliary items) shall fit within the space shown on the Plans. Any costs associated with furnishing equipment which exceeds the available space shall be borne by the Contractor.

B. Enclosures (with any required accessories or auxiliary items) shall be suitable for the environment where installed.

C. Enclosure materials shall be as follows unless noted otherwise:
   1. Control Stations:
      a. Where located in extremely corrosive areas (chlorine rooms, fluoride rooms, etc.): NEMA 4X of non-metallic construction (with non-metallic hardware) compatible with the associated chemical(s).
      b. Where located in other wet, process or outdoor areas: NEMA 4X of type 304 stainless steel construction (with stainless steel hardware).
      c. Where located in dry, non-process, indoor areas (such as electrical rooms): NEMA 1 of die cast zinc/aluminum construction.
   2. Control Panels:
      a. Where located in extremely corrosive areas (chlorine rooms, fluoride rooms, etc.): NEMA 4X of non-metallic construction (with non-metallic hardware) compatible with the associated chemical(s).
      b. Where located in other wet, process or outdoor areas: NEMA 4X of type 316 stainless steel construction (with stainless steel hardware).
      c. Where located in dry, non-process, indoor areas (such as electrical rooms): NEMA 1 or 12.

D. Control Panel Enclosure Construction:
   1. Non-metallic control panel enclosure material, where specified, shall be reinforced polyester resin or equivalent, with a minimum thickness of 3/16 inch for all surfaces except those requiring reinforcement. Panels shall be precision molded to form a one piece unit with all corners rounded. Exterior surfaces shall be gel-coated to provide a corrosion-resistant maintenance-free satin finish which shall never need painting. Color pigments shall be molded into the resin. Color shall be grey.
   2. Metallic control panel enclosures, where specified, shall be fabricated using a minimum of 14 gauge steel for wall or frame mounted enclosures and a minimum of 12 gauge for freestanding enclosures. Continuously weld all exterior seams and grind smooth. Reinforce sheet steel with steel angles where necessary support equipment and ensure rigidity and preclude resonant vibrations.
   3. Use pan-type construction for doors.
   4. Door widths shall not exceed 36-inches.
   5. Mount doors with full length, heavy duty piano hinge with hinge pins.
   6. Provide gasket completely around each door opening.
   7. Mount and secure all internal components to removable back plate assembly.
   8. For NEMA 1 or 12 enclosures, provide handle-operated key-lockable three point stainless steel latching system for each door.
   9. For NEMA 4X enclosures, provide provisions for padlocking all doors and provide clamps on three (3) sides of each door.

2.4. CONTROL PANEL ACCESSORIES:

A. Cooling systems shall be provided if so required by the application to maintain temperatures within the acceptable ranges of the interior equipment. In no case (regardless of temperature ratings of internal equipment) shall maximum temperatures within control panels be allowed to exceed 50 degrees C (122 degrees F). Thermostats shall be provided to control cooling without need of manual operation. Thermostat setpoints shall be as per recommendations of the equipment suppliers. See above for thermal calculation requirements. Cooling units shall be as manufactured by Hoffman Engineering Co., Rittal or approved equal and shall be thermostatically controlled.

B. Space heaters shall be provided for condensation and temperature control. Thermostats AND hygrostats (or combination hygrotherm controllers) shall be provided to control heating requirements (based on temperature and relative humidity within enclosure) without need of manual operation. Setpoints shall be as per recommendations of the equipment suppliers. See above for thermal calculation requirements. Space heaters and associated control devices shall be as manufactured by Hoffman Engineering Co., Rittal, Stego or approved equal.

C. NEMA 4X control panels shall be provided with vapor-phase corrosion inhibitor(s) (chemical combinations that vaporize and condense on all surfaces in the enclosed area, to protect metal surfaces/devices within the enclosed area from corrosion). Corrosion inhibitor shall be Hoffman #AHCI series (sized as required by the enclosure volume to be protected) or equal.

D. For outdoor panels, stainless steel solar shields for front, top and each side of panel, supported to associated panel face with standoffs as required (to allow free air flow between solar shield and panel enclosure), shall be provided where required to limit solar loading on panel to allow use of a ventilated panel design rather than an air-conditioned panel design.

E. Provide a sun shield over all LCD displays in exterior-mounted panels. Sun shield shall be collapsible to fully protect LCD display from UV light when not in use, shall provide side and top shielding when in use, shall be constructed of stainless steel and shall be installed such as to maintain NEMA 4X ratings of enclosures.

F. Provide a clear polycarbonate gasketted hinged door or window to encompass all indicators, controllers, recorders, etc. mounted on NEMA 4 and 4X enclosures.

G. Provide interior mounting panels and shelves constructed of minimum 12 gauge steel with white enamel finish. Provide metal print pocket with white enamel finish on inside of door.

H. Provide interior LED light kit, mounted at top of interior of panel, and switched to turn “ON” when door is opened for the following control panels:
   1. Control panels with outer dimensions greater than 20” wide or 30” high.
   2. Control panels containing PLCs or other similar programmable devices.

I. Control panels containing VFDs or Reduced Voltage Soft Starters shall include a door mounted digital keypad for adjusting the starter parameters and viewing process values and viewing the motor and starter statuses without opening the enclosure deadfront door.

2.5. CONTROL COMPONENTS

A. General:

1. All pushbuttons, pilot lights, selector switches and other control devices shall be separate, standard size (full 30mm) and shape, heavy duty oil-tight units.
   a. Devices in extremely corrosive areas (chlorine rooms, fluoride rooms, etc.) shall be of non-metallic construction.
   b. Devices in other areas shall be of chrome-plated construction.
2. All components and devices so that connection can be easily made and so there is ample room for servicing each item.
3. Door-mounted indicators, recorders, totalizers and controllers shall be located between 48" and 72" above finished floor level.
4. Door-mounted indicator lights, selector switches and pushbuttons shall be located between 36" and 80" above finished floor level.
5. All devices and components shall be adequately supported to prevent movement. Mounting strips shall be used to mount relays, timers and other devices suitable for this type of mounting.

B. Pilot Lights:
1. All pilot lights to be cluster LED type & push to test.

C. Pushbuttons:
1. All STOP operators within control stations located at equipment shall be provided with lockout provisions and a minimum of two (2) sets of contact blocks.
2. Emergency shutoff pushbutton devices shall be as follows unless noted otherwise:
   a. 2 ¼" diameter, mushroom-style, maintained contact push buttons
   b. With a minimum of one (1) normally open dry contact and three normally closed dry contacts.
   c. Connections made such that pushing "in" the button will shutoff the associated equipment.
   d. Provided with a red engraved nameplate with ½" lettering to read "Emergency Shutoff".

D. Relays:
1. Control relays shall have the following characteristics, unless noted otherwise:
   a. General purpose, plug-in type.
   b. Minimum mechanical life of 10 million operations.
   c. Coil voltage as indicated or required by application.
   d. Single-break contacts rated 12 amperes, resistive at 240 volts.
   e. Contacts as shown on wiring diagrams plus a minimum of one (1) spare N.O. contact and one (1) spare N.C. contact. At a minimum, each individual relay shall have 3PDT contacts. Where required, multiple control relays shall be provided (to provide the required quantities of contacts) for each "relay" function shown on plans/diagrams.
   f. Furnished with RC transient suppressor to suppress coil-generated transients to 200% of peak voltage.
   g. LED on/off indicator light and manual operator.
   h. Industry standard wiring and pin terminal arrangements.
   i. Equal to Square D 8501KP series with matching plug-in socket.
2. Interposing/isolation relays used to isolate discrete output field wiring (and where required for voltage translation for other discrete signals) to/from PLC inputs/outputs

shall be terminal-block style. Terminal-block style relays shall have the following characteristics, unless noted otherwise:

a. Minimum mechanical life of 10 million operations.
b. Single-break contacts rated 6 amperes, resistive at 120 volts.
c. One (1) N.O. contact per relay.
d. Furnished with integral transient protection.
e. LED on/off indicator light.
f. DIN-rail mounted.
g. Equal to Square D type Zelio RSL.

3. Timer relays shall be electronic, adjustable plug-in devices meeting the following characteristics, unless noted otherwise:

a. General purpose, plug-in type.
b. Minimum mechanical life of 10 million operations.
c. Single-break contacts rated 10 amperes, resistive at 240 volts.
d. Contacts as shown on wiring diagrams plus a minimum of one (1) spare N.O. contact and one (1) spare N.C. contact. At a minimum, each relay shall have DPDT contacts (2 N.O. & 2N.C.). Where required, multiple timer or control relays shall be provided (to provide the required quantities of contacts) for each "relay" function shown on plans/diagrams.
e. Rotary-thumbwheel adjustments for time value, timing range and function.
f. Time value adjustments from .05 seconds to 999 hours
g. Selectable Timing Functions, including the following:
   1) On Delay
   2) Interval
   3) Off Delay
   4) One Shot
   5) Repeat Cycle-Off
   6) Repeat Cycle-On
   7) On/Off Delay
   8) One Shot Falling Edge
   9) Watchdog
   10) Trigger On Delay
h. Accuracy shall be $\pm$ 2% and repeatability shall be $\pm$ 0.1%.
i. Furnished with integral transient protection.
j. LED indicator light(s) for "timing" and "on/off status"
k. Held in place with hold-down spring
l. Equal to Square D type JCK with matching plug-in socket.

2.6. DC POWER SUPPLIES

A. DC Power supplies shall be provided where specified elsewhere, or as required by design of system. Power supplies shall be industrial type, AC-to-DC switching, output voltage as required, 120vac input, size as required for the initial application plus 50% spare capacity.

B. Redundant power supplies with diode isolation shall be provided so that the loss of one power supply does not affect system operation. The back-up supply systems shall be designed so that either the primary or the back-up supply can be removed, repaired, and returned to service without disrupting the system operation.

C. Power supply output shall be protected by secondary overcurrent protection device(s).

D. The power distribution from multiloop supplies shall be selectively fused so that a fault in one instrument loop will be isolated from the other loops being fed from the same supply.

E. Each power supply shall meet the following requirements.
1. Regulation, line: 0.4% for input from 105 to 132vac.
2. Regulation, load: 0.8%
3. Ripple/Noise: 15mV RMS / 200 mV peak to peak
4. Operating temperature range: 0 deg C - 60 deg C
5. Overvoltage protection
6. Overload Protection
7. Output shall remain within regulation limits for a least 16ms after loss of AC power at full load.
8. Output status indicator.
9. UL listing

F. Power supplies shall be manufactured by Puls, Sola, Phoenix Contact or equal.

2.7. UNINTERRUPTIBLE POWER SUPPLIES

A. Uninterruptible power supplies (UPSs) shall be provided where specified elsewhere, or as required by design of system. Power supplies shall be industrial type, size as required for the initial application plus 50% spare capacity unless noted otherwise.

B. Battery runtime shall be as specified elsewhere. If no other specification for battery runtime is specified, battery runtime shall be 12.5 minutes at full load.

C. UPSs shall be double-conversion, on-line type.

D. UPSs shall be rated for operation in -20 degrees C to 55 degrees C ambient temperatures.

E. UPS batteries shall be hot-swappable and 12-year rated when installed in 25 degrees C environment and 4-year rated when installed in 50 degrees C environment.

F. UPSs shall include dry contacts for the following alarm points:
1. Loss of Input Power Alarm
2. Low Battery Alarm

G. UPSs shall be manufactured by Falcon UPS or approved equal.

2.8. DISCONNECTS

A. A main disconnect switch or circuit breaker shall be supplied integral to all control panels. The main disconnect or circuit breaker shall be accessible/operable without exposing the operator to energized sections of the control panel(s).

B. Individual circuit breakers shall be provided integral to the manufactured control panel for each separate power circuit originating within the control panel.

C. Where the highest continuous current trip setting for which the actual overcurrent device installed in a circuit breaker is rated (or can be adjusted to is 1200A or higher, breakers shall be electronic trip and shall be provided with arc energy-reducing maintenance switching (with local status indicator) to reduce arc flash energy per NEC 240.87 requirements.

2.9. COMBINATION STARTERS

A. All combination starters shall utilize a unit disconnect. Magnetic starters shall be furnished in all combination starter units unless specifically shown otherwise. All starters shall utilize full NEMA/EEMAC rated contactors (size 1 minimum).

B. Starters shall be provided with a three-pole, external (door mounted) manual reset, solid state overload relay. Solid state overload relay shall have switch-selectable trip class and shall provide protection from:
1. Overload.
2. Phase Unbalance.
3. Phase Loss.
4. Ground Fault (Class II detection).

C. Unless specifically shown otherwise, each combination starter shall be furnished with a control circuit transformer including two primary protection fuses and one secondary fuse (in the non-ground secondary conductor). The transformer shall be sized to accommodate the contactor(s) and all connected control circuit loads (including motor space heaters and other similar loads where specified). The transformer rating shall be fully visible from the front when the unit door is opened. Unless otherwise indicated, control voltage shall be 120V AC. Control power shall be provided by individual unit control power transformers.

D. When a unit control circuit transformer is not provided, the disconnect shall include an electrical interlock for disconnection of externally powered control circuits.

E. Auxiliary control circuit interlocks shall be provided where indicated. Auxiliary interlocks shall be field convertible to normally open or normally closed operation.

F. NEMA/EEMAC Size 1-4 starters shall be mounted directly adjacent to the wireway so that power wiring (motor leads) shall connect directly to the starter terminals without the use of interposing terminals. Larger starters shall be arranged so that power wiring may exit through the bottom of the starter cubical without entering the vertical wireway.

G. Each starter shall be equipped with a minimum of the following control devices:
1. Door-mounted reset button.
2. Two (2) field-reversible (N.O./N.C.) auxiliary contacts
3. For reversing and two-speed starters: Four (4) field-reversible (N.O./N.C.) auxiliary contacts
4. Additional control devices as indicated on plans.

H. Terminal Blocks
1. Wiring within all units shall be type B, with unit-mounted control terminal blocks for each field wire.

2. Terminal blocks shall be the pull-apart type 600 volt and rated at 25 amps. All current carrying parts shall be tin plated. Terminals shall be accessible from inside the unit when the unit door is opened. Terminal blocks shall be DIN rail mounted with the stationary portion of the block secured to the unit bottom plate. The stationary portion shall be used for factory connections, and shall remain attached to the unit when removed. The terminals used for field connections shall face forward so they can be wired without removing the unit or any of its components.

I. Nameplates
1. Each unit shall be properly labeled with an engraved phenolic nameplate with a white background and black letters.
2. Each pilot device shall be properly labeled with a legend plate or an engraved phenolic nameplate.

2.10. WIRING

A. Refer to Section 260519 for all wiring types/applications.

B. All wiring shall be identified on each end with hot stamped, shrink tube type, or self-laminating vinyl permanent wire markers to correspond with numbering shown on wiring diagrams.

C. All connections shall be made on terminals with no splices.

D. All wiring runs shall be along horizontal or vertical routes to present a neat appearance. Angled runs will not be acceptable. Group or bundle parallel runs of wire in plastic wire duct where practical.

E. All wiring runs shall be securely fastened to the panel or wire duct by means of plastic wire ties. Adequately support and restrain all wire runs to prevent sagging or movement.

F. AC power wiring and instrumentation/analog wiring shall be run separate.

G. Color code all internal wiring (not field wiring) as follows:
1. Line and load circuits: Black (B)
2. AC control wiring: Red (R)
3. Externally-Powered control wiring: Yellow (Y)
4. Neutral wiring: White (W)
5. Low voltage DC(+)pos: Blue (BL)
6. Low voltage DC(-)neg: Blue/White Tracer (BL/W)
7. Grounding: Green/Yellow Tracer (G/Y)

H. Terminal strips shall be provided for all input and output wiring. No more than two (2) wires shall be connected to one (1) terminal block.

2.11. ELECTRICAL SURGE AND TRANSIENT PROTECTION

A. General
1. Function: Protect the system against damage due to electrical surges.

B. Application: As a minimum, provide surge and transient protection (with proper grounding) at the following locations as described below:
   1. Power Input:
      a. Provide surge protection device at any connection of 120VAC power to panels containing programmable logic controllers, remote I/O equipment, UPS's, transmitters, radios, VFDs, Reduced Voltage Soft Starters or other electronic equipment. Device shall:
         1) Be mounted internal to the associated panel, with dedicated overcurrent protection.
         2) Be of two-part (base and SPD), DIN-rail mountable construction.
         3) Have 15kA total nominal discharge current per line (based on 8/20µs waveform).
         4) Have maximum continuous operating voltage (MCOV) rating as required by the associated circuit voltage.
         5) Visually indicate operational status.
         6) Be Dehn DEHNguard series or equal by MTL Technologies.
      b. Provide surge protection device at any connection of multi-pole AC power to panels containing programmable logic controllers, remote I/O equipment, UPS's, transmitters, radios, VFDs, Reduced Voltage Soft Starters or other electronic equipment. Device shall:
         1) Be mounted internal to the associated panel, with dedicated overcurrent protection.
         2) Provide protection for all phases.
         3) Have 40kA (per phase) peak surge current rating.
         4) Have maximum continuous operating voltage (MCOV) rating as required by the associated circuit voltage.
         5) Visually indicate operational status.
         6) Be Square D SDSA or HWA series or equal.
   2. Analog I/O Panel Terminations:
      a. Provide surge protection device at the PLC (or similar) panel connection of each analog I/O signal. Device shall:
         1) Be mounted internal to the associated panel.
         2) Be of two-part (base and SPD), DIN-rail mountable construction.
         3) Have 10kA total nominal discharge current per line (based on 8/20µs waveform).
         4) Have maximum continuous operating voltage (MCOV) rating as required by the associated signal.
         5) Be Dehn Blitzductor XT series or equal by MTL Technologies.
   3. Discrete I/O Panel Terminations:
      a. Provide isolation relay at the PLC (or similar) panel connection of each discrete output signal (within the associated panel). See above for isolation relay requirements.
   4. Network Panel Terminations:
      a. Provide surge protection device at the PLC (or similar) panel connection of each network cable. Device shall:
         1) Be mounted internal to the associated panel.
         2) Be of DIN-rail mountable construction.

3) Have 1kA total nominal discharge current per line (based on 8/20µs waveform).
4) Be designed specifically for the associated network connection type (Ethernet, RS485, RS232, etc.).
5) Be MTL Zonebarrier series or equal.

5. Antenna Cable Terminations:
   a. Provide surge protection device at the connection of antenna cable to the radio panel. Device shall:
      1) Be mounted internal to the associated panel.
      2) Provide coarse protection via replaceable gas-filled surge voltage arrestor
      3) Be Phoenix Contact COAXTRAB series or equal.

C. Installation and grounding of suppressor: As directed by manufacturer. Provide coordination and inspection of grounding.

PART 3 - EXECUTION

3.1. INSTALLATION

A. Provide enclosure mounting supports as required for floor, frame or wall mounting. All supports in exterior, wet or process areas shall be stainless steel unless noted otherwise. All floor-mounted panels or other similar distribution equipment shall be mounted on 6" concrete housekeeping pads unless specifically shown otherwise.

B. All enclosures used outside shall be solid bottom unless otherwise specified. All cable and piping openings shall be sealed watertight. Cable and piping shall enter the enclosure as shown on drawings or specified herein.

C. All equipment and components shall be solidly grounded to the control panel. One grounded terminal unit shall be provided in each control panel for connection to plant ground system. Grounding digital and analog components shall be performed in accordance with the instrument supplier's installation recommendations. Signal ground shall be solidly connected to the ground system so as to prevent ground loops

3.2. PAINTING

A. For enclosures other than NEMA 4X stainless steel or fiberglass:
   1. Completely clean all surfaces so that they are free of corrosive residue. Then, phosphatize all surfaces for corrosion protection.
   2. Prime with two (2) coats and finish with one coat of factory finish textured polyurethane. Paint shall be Sherwin-Williams Polane "T' or approved equal.
   3. Color to be selected during shop drawing review phase.

3.3. IDENTIFICATION & DOCUMENTATION

A. Refer to specification section 260553 for additional requirements.

B. Control panel power supply source, type, voltage, number or circuit ratings shall be identified inside control panels and on drawings.

C. All interior devices and components shall be identified with thermal transfer labels with black letters on white background. Labels shall be placed on the subpanel and not the component. Marking system shall be a Brother “PTouch II” or equal. Lettering shall be 1/4" high.

D. All front panel mounted devices such as push buttons shall be identified by the use of engraved bakelite nameplates or legend plates. Nameplates shall be 1/8” thick, white with black core.

E. A job-specific, custom wiring diagram for each control panel (not including control stations without relays) shall be provided to the contractor prior to installation for making the appropriate electrical connections. The wiring diagram shall clearly show all control components connected to the panel (whether the components are mounted internal or external to the enclosure). All wires and terminal blocks shall be clearly labeled. A laminated copy of the final wiring diagram for each unit shall be installed inside the door of the associated panel, and submitted to the owner with the as-built documentation.

3.4. OWNER TRAINING

A. Fully train the owner in the proper operation of all control panels/equipment, describing and demonstrating full operation, including function of each door-mounted device.

3.5. SPARE EQUIPMENT

A. Provide the following spare equipment:
   1. Fuses: 10% (minimum of 3) of each size and type utilized, mounted within a pocket within the associated control panel.
   2. Where control panel contains programmable controller (or similar equipment): Flash drive containing copies of all final programs utilized within the control panel, with provisions/cable assemblies as required to connect the flash drive provided to the controller to download the programs. Flash drive shall be attached to retractable cord (long enough to reach the associated port) attached to the inside of the panel door.

END OF SECTION 262900

SECTION 263213 - GENERATOR SETS

PART 1 - GENERAL

1.1. SCOPE

A. Provide complete factory assembled generator set equipment with digital (microprocessor-based) electronic generator set controls, digital governor, and digital voltage regulator.

B. Provide factory test, startup by a supplier authorized by the equipment manufacturer(s), and on-site testing of the system.

C. The generator set manufacturer shall warrant all equipment provided under this section, whether or not is manufactured by the generator set manufacturer, so that there is one source for warranty and product service. Technicians specifically trained and certified by the manufacturer to support the product and employed by the generator set supplier shall service the generator sets.

1.2. CODES AND STANDARDS

A. The generator set installation and on-site testing shall conform to the requirements of the following codes and standards, as applicable. The generator set shall include necessary features to meet the requirements of the latest editions of the following standards/codes where applicable:
1. CSA 282, 1989 Emergency Electrical Power Supply for Buildings
2. IEEE446 – Recommended Practice for Emergency and Standby Power Systems for Commercial and Industrial Applications
3. International Building Codes.
4. NFPA70 – National Electrical Code. Equipment shall be suitable for use in systems in compliance to Article 700, 701, and 702.
5. NFPA99 – Essential Electrical Systems for Health Care Facilities.
6. NFPA110 – Emergency and Standby Power Systems. The generator set shall meet all requirements for Level 1 systems. Level 1prototype tests required by this standard shall have been performed on a complete and functional unit, component level type tests will not substitute for this requirement.

B. The generator set and supplied accessories shall meet the requirements of the latest editions of the following standards where applicable:
1. NEMA MG1-1998 part 32. Alternator shall comply with the requirements of this standard.
2. UL142 – Sub-base Tanks
3. UL1236 – Battery Chargers
4. UL2200. The generator set shall be listed to UL2200 or submit to an independent third party certification process to verify compliance as installed.

C. The generator set and supplied accessories shall meet all applicable Environmental Protection Agency (EPA) TIER Emission Level or Emission Certification requirements in effect at the

time the generator set is ordered.

D. The control system for the generator set shall comply with the following requirements.
   1. CSA C22.2, No. 14 – M91 Industrial Control Equipment.
   2. EN50082-2, Electromagnetic Compatibility – Generic Immunity Requirements, Part 2: Industrial.
   3. EN55011, Limits and Methods of Measurement of Radio Interference Characteristics of Industrial, Scientific and Medical Equipment.
   4. FCC Part 15, Subpart B.
   5. IEC8528 part 4. Control Systems for Generator Sets
   6. IEC Std 801.2, 801.3, and 801.5 for susceptibility, conducted, and radiated electromagnetic emissions.
   7. UL508. The entire control system of the generator set shall be UL508 listed and labeled.
   8. UL1236 –Battery Chargers.

E. The generator set manufacturer shall be certified to ISO 9001 International Quality Standard and shall have third party certification verifying quality assurance in design/development, production, installation, and service, in accordance with ISO 9001.

1.3. ACCEPTABLE MANUFACTURERS

A. Cummins/Onan (Basis of Design)

B. Caterpillar

C. Generac

D. Kohler

PART 2 - PRODUCTS

2.1. GENERATOR SET

A. Ratings
   1. The generator set assembly (including both the motor/engine assembly and the generator assembly) shall operate at 1800 rpm, and the generator shall produce a 60 Hz waveform.
   2. Voltage and phase ratings shall be as shown on plans.
   3. Minimum kW rating (and associated alternator sizing) shall be the greater of the following:
      a. Minimum kW rating listed on plans.
      b. Ratings required to provide skVA as follows (shall be documented with reports in submittals using generator sizing software described in Part 3 below):
         1) If so listed on plans, the step loads fed by the generator at voltage/frequency dip criteria specified.
         2) If so listed on plans, the skVA rating specified.
         3) If neither of the above are listed on plans, generator shall be sized to accommodate a block load of 100% of the Total Demand Load listed on plans, with a maximum voltage dip of 20% and a maximum frequency dip of 10%.

4. kVA rating shall be 1.25 times the kW rating (based on .8 PF).
5. Unless shown otherwise on plans, the generator set shall be rated based on the following site conditions:
   a. Altitude of project site.
   b. Ambient temperatures up to 120 degrees F.
6. The generator set rating shall be based on emergency/standby service unless noted otherwise.

B. Performance
1. Voltage regulation shall be plus or minus 0.5 percent for any constant load between no load and rated load. Random voltage variation with any steady load from no load to full load shall not exceed plus or minus 0.5 percent.
2. Frequency regulation shall be isochronous from steady state no load to steady state rated load. Random frequency variation with any steady load from no load to full load shall not exceed plus or minus 0.5%.
3. The engine-generator set shall be capable of accepting a single step load of 100% nameplate kW and power factor, less applicable derating factors, with the engine-generator set at operating temperature.
4. Minimum motor starting capability shall be as shown on plans. The generator set shall be capable of recovering to a minimum of 90% of rated no load voltage following the application of the specified skVA load at near zero power factor applied to the generator set. Maximum voltage dip on application of this load, considering both alternator performance and engine speed changes shall not exceed 20% unless shown otherwise on plans.
5. The alternator shall produce a clean AC voltage waveform, with not more than 5% total harmonic distortion at full linear load, when measured from line to neutral, and with not more than 3% in any single harmonic, and no 3rd order harmonics or their multiples. Telephone influence factor shall be less than 40.
6. The generator set shall be certified by the engine manufacturer to be suitable for use at the installed location and rating, and shall meet all applicable exhaust emission requirements at the time of commissioning.

C. Construction
1. The engine-generator set shall be mounted on a heavy-duty steel base to maintain alignment between components. The base shall incorporate a battery tray with hold-down clamps within the rails.
2. The engine-generator set shall be rated for the seismic conditions for the installation location as mapped by the US Geological Survey and required by local building codes.
3. All switches, lamps, and meters in the control system shall be oil-tight and dust-tight. All active control components shall be installed within a UL/NEMA 3R enclosure. There shall be no exposed points in the control (with the door open) that operate in excess of 50 volts.

D. Connections
1. The generator set load connections shall be composed of silver or tin plated copper bus bars, drilled to accept compression terminations of the number and size as shown on the drawings. Sufficient lug space shall be provided for use with cables of the number and size as shown on the drawings.

2. Power connections to auxiliary devices shall be made at the devices, with required overcurrent protection located at panelboard(s) external to the generator set unless shown otherwise on plans. Where a load center or panelboard is shown within the generator enclosure on the plans, this load center/panelboard shall be furnished with the generator and shall comply with the applicable panelboard and identification sections of this specification.
3. Generator set control interfaces to other system components shall be made on a permanently labeled terminal block assembly. Labels describing connection point functions shall be provided.

2.2. ENGINE AND ENGINE EQUIPMENT

A. The engine shall be natural gas fueled, radiator and fan cooled. The horsepower rating of the engine at its minimum tolerance level shall be sufficient to drive the alternator and all connected accessories. Two cycle engines are not acceptable. Engine accessories and features shall include:
1. Complete engine fuel system, including all pressure regulators, strainers, and control valves. The fuel system shall be plumbed to the generator set skid for ease of site connections to the generator set. For dual fuel systems, changeover from primary to secondary fuel shall be automatic.
2. An electronic governor system shall provide automatic isochronous frequency regulation. The governing system dynamic capabilities shall be controlled as a function of engine coolant temperature to provide fast, stable operation at varying engine operating temperature conditions. The control system shall actively control the fuel rate and excitation as appropriate to the state of the generator set. Fuel rate shall be regulated as a function of starting, accelerating to start disconnect speed, accelerating to rated speed and operating in various isochronous or parallel states. The governing system shall include a programmable warm up at idle and cooldown at idle function. While operating in idle state, the control system shall disable the alternator excitation system.
3. Skid-mounted radiator and cooling system rated for full load operation in 120 degrees F (49 degrees C) ambient as measured at the generator air inlet. Radiator fan shall be suitable for use in a system with 0.5 in H_2O restriction. Radiator shall be sized based on a core temperature that is 20F higher than the rated operation temperature, or prototype tested to verify cooling performance of the engine/radiator/fan operation in a controlled environment. Radiator shall be provided with a duct adapter flange. The equipment manufacturer shall fill the cooling system with a 50/50-ethylene glycol/water mixture prior to shipping. Rotating parts shall be guarded against accidental contact.
4. Electric starter(s) capable of three complete cranking cycles without overheating.
5. Positive displacement, mechanical, full pressure, lubrication oil pump.
6. Full flow lubrication oil filters with replaceable spin-on canister elements and dipstick oil level indicator.
7. Replaceable dry element air cleaner with restriction indicator.
8. Flexible fuel lines.
9. Engine mounted battery charging alternator and solid-state voltage regulator.
10. Block heater
    a. Engine mounted, thermostatically controlled, block heater(s) for each engine. Heater voltage shall be as shown on the project drawings. The coolant heater shall be UL499 listed and labeled.

b. The block heater shall be installed on the engine with silicone hose connections. Steel tubing shall be used for connections into the engine coolant system wherever the length of pipe run exceeds 12 inches. The block heater installation shall be specifically designed to provide proper venting of the system. The block heaters shall be installed using quick disconnect couplers to isolate the heaters for replacement of the heater element without draining the coolant from the generator set. The quick disconnect/automatic sealing couplers shall allow the heater element to be replaced without draining the engine cooling system or significant coolant loss.

c. The block heater shall be provided with a DC thermostat, installed at the engine thermostat housing. An AC power connection box shall be provided for a single AC power connection to the block heater system.

d. The block heater(s) shall be sized as recommended by the engine manufacturer to warm the engine to a minimum of 104F (40C) in a 40F (4C) ambient, in compliance with NFPA110 requirements, or the temperature required for starting and load pickup requirements of this specification. If the heater quantities or wattage ratings are different than shown on plans, contractor shall be responsible for providing the properly-rated circuits (with circuit breakers) as required to the heater(s).

11. Provide vibration isolators, spring & pad type, quantity as recommended by the generator set manufacturer. Isolators shall include seismic restraints if required by site location.

12. Starting and Control Batteries shall be calcium/lead antimony type, 24 volt DC, sized as recommended by the engine manufacturer, complete with battery cables and connectors. The batteries shall be capable of a minimum of three complete 15-second cranking cycles at 40F ambient temperature when fully charged.

13. Provide critical-grade exhaust silencer(s) for each engine of size and type as recommended by the generator set manufacturer and approved by the engine manufacturer. Exhaust system shall be installed according to the engine manufacturer's recommendations and applicable codes and standards.

14. A UL listed/CSA certified voltage regulated battery charger shall be provided for each engine-generator set. The charger shall be located at the generator unless shown otherwise on plans. Output amperage, Input AC voltage and DC output voltage shall be as required. Chargers shall be equipped with float, taper and equalize charge settings. Charger shall include an Analog DC voltmeter and ammeter, 12 hour equalize charge timer, and AC and DC fuses. Operational monitors shall provide visual output along with individual form C contacts rated at 4 amps, 120 VAC, 30VDC for remote indication of:

    a. Loss of AC power - red light
    b. Low battery voltage - red light
    c. High battery voltage - red light
    d. Power ON - green light and N.O. relay contact

2.3. AC GENERATOR

A. The AC generator shall be; synchronous, four pole, 2/3 pitch, revolving field, drip-proof construction, single pre-lubricated sealed bearing, air cooled by a direct drive centrifugal blower fan, and directly connected to the engine with flexible drive disc. All insulation system components shall meet NEMA MG1 temperature limits for Class H insulation system and shall

be UL1446 listed. Actual temperature rise measured by resistance method at full load shall not exceed 105 degrees Centigrade.

B. The generator shall be capable of delivering rated output (kVA) at rated frequency and power factor, at any voltage not more than 5 percent above or below rated voltage.

C. A permanent magnet generator (PMG) shall be included to provide a reliable source of excitation power for optimum motor starting and short circuit performance. The PMG and controls shall be capable of sustaining and regulating current supplied to a single phase or three phase fault at approximately 300% of rated current for not more than 10 seconds.

D. AC generator shall be 12-lead reconnectable type to provide the following voltage output configurations:
   1. 277/480V-3Phase-4Wire
   2. 120/208V-3Phase-4Wire
   3. 120/240V-3Phase-4Wire
   4. 120/240V-1Phase-3Wire

E. The subtransient reactance of the alternator shall not exceed 12 percent, based on the standby rating of the generator set.

2.4. GENERATOR SET CONTROL

A. The generator set shall be provided with a microprocessor-based control system that is designed to provide automatic starting, monitoring, and control functions for the generator set. The control system shall also be designed to allow local monitoring and control of the generator set, and remote monitoring and control as described in this specification.

B. The control shall be mounted on the generator set, or may be mounted in a free-standing panel next to the generator set if adequate space and accessibility is available. The control shall be vibration isolated and prototype tested to verify the durability of all components in the system under the vibration conditions encountered.

C. The generator set mounted control shall include the following features and functions:
   1. Control Switches
      a. Mode Select Switch. The mode select switch shall initiate the following control modes. When in the RUN or MANUAL position the generator set shall start, and accelerate to rated speed and voltage as directed by the operator. A separate push-button to initiate starting is acceptable. In the OFF position the generator set shall immediately stop, bypassing all time delays. In the AUTO position the generator set shall be ready to accept a signal from a remote device to start and accelerate to rated speed and voltage.
      b. EMERGENCY STOP switch. Switch shall be Red "mushroom-head" push-button. Depressing the emergency stop switch shall cause the generator set to immediately shut down, and be locked out from automatic restarting.
      c. RESET switch. The RESET switch shall be used to clear a fault and allow restarting the generator set after it has shut down for any fault condition.

d. PANEL LAMP switch. Depressing the panel lamp switch shall cause the entire panel to be lighted with DC control power. The panel lamps shall automatically be switched off 10 minutes after the switch is depressed, or after the switch is depressed a second time.

2. Generator Set AC Output Metering. The generator set shall be provided with a metering set including the following features and functions:
   a. Analog voltmeter, ammeter, frequency meter, power factor meter, and kilowatt (KW) meter. Voltmeter and ammeter shall display all three phases. Meter scales shall be color coded in the following fashion: green shall indicate normal operating condition, amber shall indicate operation in ranges that indicate potential failure, and red shall indicate failure impending. Metering accuracy shall be within 1% at rated output.
   b. The control system shall monitor the total load on the generator set, and maintain data logs of total operating hours at specific load levels ranging from 0 to 110% of rated load, in 10% increments. The control shall display hours of operation at less than 30% load and total hours of operation at more than 90% of rated load.
   c. The control system shall log total number of operating hours, total kWH, and total control on hours, as well as total values since reset.
3. Generator Set Alarm and Status Display.
   a. The generator set control shall include LED alarm and status indication lamps. The lamps shall be high-intensity LED type. The lamp condition shall be clearly apparent under bright exterior day lighting conditions.
   b. The generator set control shall indicate the existence of the warning and shutdown conditions on the control panel. Conditions required to be annunciated shall include:
      1) low oil pressure (warning)
      2) low oil pressure (shutdown)
      3) oil pressure sender failure (warning)
      4) low coolant temperature (warning)
      5) high coolant temperature (warning)
      6) high coolant temperature (shutdown)
      7) high oil temperature (warning)
      8) engine temperature sender failure (warning)
      9) low coolant level (warning or shutdown - selectable)
      10) fail to crank (shutdown)
      11) fail to start/overcrank (shutdown)
      12) overspeed (shutdown)
      13) low DC voltage (warning)
      14) high DC voltage (warning)
      15) weak battery (warning)
      16) high AC voltage (shutdown)
      17) low AC voltage (shutdown)
      18) under frequency (shutdown)
      19) over current (warning)
      20) over current (shutdown)
      21) short circuit (shutdown)
      22) ground fault (warning) (if genset breaker is rated 1000A or greater)

23) over load (warning)
24) Genset circuit breaker tripped (warning)
25) emergency stop (shutdown)

4. Engine Status Monitoring.
   a. The following information shall be available from an analog status panel on the generator set control :
      1) engine oil pressure (psi or kPA)
      2) engine coolant temperature (degrees F or C)
      3) battery voltage (DC volts)
5. Engine Control Functions.
   a. The control system provided shall include a cycle cranking system, which allows for user selected crank time, rest time, and # of cycles. Initial settings shall be for 3 cranking periods of 15 seconds each, with 15 second rest period between cranking periods.
   b. The control system shall include an idle mode control, which allows the engine to run in idle mode in the RUN position only. In this mode, the alternator excitation system shall be disabled.
   c. The control system shall include an engine governor control, which functions to provide steady state frequency regulation as noted elsewhere in this specification. The governor control shall include adjustments for gain, damping, and a ramping function to control engine speed and limit exhaust smoke while the unit is starting.
   d. The control system shall include time delay start (adjustable 0-300 seconds) and time delay stop (adjustable 0-600 seconds) functions.
   e. The control system shall include sender failure monitoring logic for speed sensing, oil pressure, and engine temperature which is capable of discriminating between failed sender or wiring components, and an actual failure conditions.
6. Alternator Control Functions:
   a. The generator set shall include an automatic digital voltage regulation system that is matched and prototype tested by the engine manufacturer with the governing system provided. It shall be immune from misoperation due to load-induced voltage waveform distortion and provide a pulse width modulated output to the alternator exciter. The voltage regulation system shall be equipped with three-phase RMS sensing and shall control buildup of AC generator voltage to provide a linear rise and limit overshoot. The system shall include a torque-matching characteristic, which shall reduce output voltage in proportion to frequency below an adjustable frequency threshold. Torque matching characteristic shall be adjustable for roll-off frequency and rate, and be capable of being curve-matched to the engine torque curve with adjustments in the field. The voltage regulator shall include adjustments for gain, damping, and frequency roll-off. Adjustments shall be broad range, with local indication of setting level.
   b. Controls shall be provided to monitor the output current of the generator set and initiate an alarm (over current warning) when load current exceeds 110% of the rated current of the generator set on any phase for more than 60 seconds. The controls shall shut down and lock out the generator set when output current level approaches the thermal damage point of the alternator (over current

shutdown). The protective functions provided shall be in compliance to the requirements of NFPA70 article 445.

c. Controls shall be provided to individually monitor all three phases of the output current for short circuit conditions. The control/protection system shall monitor the current level and voltage. The controls shall shut down and lock out the generator set when output current level approaches the thermal damage point of the alternator (short circuit shutdown). The protective functions provided shall be in compliance to the requirements of NFPA70 article 445. This protection may be provided using a microprocessor-based programmable relay system designed to protect the alternator system from damage, or using programmable electronic-trip LSI breaker(s), programmed/set by the generator supplier to ensure full protection of the alternator system.

d. Controls shall be provided to monitor the KW load on the generator set, and initiate an alarm condition (over load) when total load on the generator set exceeds the generator set rating for in excess of 5 seconds. Controls shall include a load shed control, to operate a set of dry contacts (for use in shedding customer load devices) when the generator set is overloaded.

e. An AC over/under voltage monitoring system that responds only to true RMS voltage conditions shall be provided. The system shall initiate shutdown of the generator set when alternator output voltage exceeds 110% of the operator-set voltage level for more than 10 seconds, or with no intentional delay when voltage exceeds 130%. Under voltage shutdown shall occur when the output voltage of the alternator is less than 85% for more than 10 seconds.

f. When required by National Electrical Code or indicated on project drawings, the control System shall include a ground fault monitoring relay. The relay shall be adjustable from 3.8-1200 amps, and include adjustable time delay of 0-10.0 seconds. The relay shall be for indication only, and not trip or shut down the generator set. Note bonding and grounding requirements for the generator set, and provide relay that will function correctly in system as installed.

7. Other Control Functions

a. The generator set shall communicate with the Automatic Transfer Switch via hardwired control connections as required.

b. A battery monitoring system shall be provided which initiates alarms when the DC control and starting voltage is out of acceptable limits. During engine cranking (starter engaged), the low voltage limit shall be disabled, and DC voltage shall be monitored as load is applied to the battery, to detect impending battery failure or deteriorated battery condition.

8. Dry Contacts/Relays for Remote Monitoring:

a. The control system shall provide ten (10) programmable output relays. These relay outputs shall be configurable for any alarm, shutdown, or status condition monitored by the control. Five (5) of these relays shall be preconfigured (and labeled accordingly) to indicate:

1) generator set operating at rated voltage and frequency
2) common warning
3) common shutdown
4) load shed command and
5) low fuel warning.

b. A fused 20 amp 24VDC power supply circuit shall be provided for customer use. DC power shall be available from this circuit at all times from the engine starting/control batteries.

2.5. GENERATOR REMOTE MANUAL STOP STATION

A. Each generator set shall be furnished with a remote manual stop station of a type to prevent inadvertent or unintentional operation per NFPA 110 requirements.

B. Stop station pushbutton shall be red, non-illuminated, push-pull, mushroom-type, maintained-contact, 1 5/8" diameter, 30mm base, heavy-duty, oil-tight, water-tight unit) mounted within guarded enclosure to prevent inadvertent operation and labeled with engraved nameplate (white letters on red background) to read: "GENERATOR EMERGENCY STOP" (or similar with specific generator name where so identified on drawings).

C. Exact stop station type shall be coordinated with generator controls supplier to ensure a fully-functional system per NFPA 110 requirements.

2.6. GENERATOR MAIN LINE CIRCUIT BREAKER(S)

A. The generator set shall be provided with a mounted main line circuit breaker(s), sized as shown on plans. The circuit breaker(s) shall incorporate an electronic trip unit that operates to protect the alternator under all overcurrent conditions, or a thermal-magnetic trip with other overcurrent protection devices that positively protect the alternator under overcurrent conditions. The supplier shall submit time overcurrent characteristic curves and thermal damage curve for the alternator, demonstrating the effectiveness of the protection provided.

B. The main line circuit breaker(s) shall be provided with auxiliary contacts to indicate trip/off alarm conditions to the generator set control system.

2.7. OUTDOOR WEATHER-PROTECTIVE ENCLOSURE

A. The generator enclosure length and width SHALL NOT EXCEED the size indicated on electrical plans or the space allowed by the specified platform area. Generators proposed/submitted that exceed the size indicated on plans will be rejected without further review.

B. The generator set shall be provided with a weatherproof, sound-attenuated, outdoor enclosure, with the entire package listed under UL2200. The package shall comply with the requirements of the National Electrical Code for all wiring materials and component spacing. The total assembly of generator set, enclosure, and sub-base fuel tank (if applicable) shall be designed to be lifted into place using spreader bars. Housing shall provide ample airflow for generator set operation at rated load in an ambient temperature of 100F. The housing shall have hinged access doors as required to maintain easy access for all operating and service functions. All doors shall be lockable, and include retainers to hold the door open during service. Enclosure roof shall be cambered to prevent rainwater accumulation. Openings shall be screened to limit access of rodents into the enclosure. All electrical power and control interconnections shall be made within the perimeter of the enclosure.

C. The enclosure shall reduce the sound level of the generator set while operating at full rated load to a maximum of 76 dBA (including exhaust noise) at any location 7 meters from the generator set in a free field environment:

D. The enclosure shall include vertical air discharge hoods as required to redirect discharge air upwards and reduce noise accordingly.

E. The enclosure shall be insulated with non-hydroscopic materials.

F. The enclosure shall be rated for the wind and seismic conditions for the installation location as mapped by the US Geological Survey and required by local building codes.

G. All sheet metal shall be primed for corrosion protection and finish painted with the manufacturers standard color using a two step electrocoating paint process, or equal meeting the performance requirements specified below. All surfaces of all metal parts shall be primed and painted. The painting process shall result in a coating that meets the following requirements:
   1. Primer thickness, 0.5-2.0 mils. Top coat thickness, 0.8-1.2 mils.
   2. Gloss, per ASTM D523-89, 80% plus or minus 5%. Gloss retention after one year shall exceed 50%.
   3. Crosshatch adhesion, per ASTM D3359-93, 4B-5B.
   4. Impact resistance, per ASTM D2794-93, 120-160 inch-pounds.
   5. Salt Spray, per ASTM B117-90, 1000+ hours.
   6. Humidity, per ASTM D2247-92, 1000+ hours.
   7. Water Soak, per ASTM D2247-92, 1000+ hours.

H. Painting of hoses, clamps, wiring harnesses, and other non-metallic service parts shall not be acceptable. Fasteners used shall be corrosion resistant, and designed to minimize marring of the painted surface when removed for normal installation or service work.

I. Enclosure shall be constructed of minimum 12 gauge steel for framework and 14 gauge steel for panels. All hardware and hinges shall be stainless steel.

J. A factory-mounted critical exhaust silencer shall be installed inside the enclosure. The exhaust shall exit the enclosure through a rain collar and terminate with a rain cap. Exhaust connections to the generator set shall be through seamless flexible connections.

K. The enclosure shall include the following maintenance provisions:
   1. Flexible coolant and lubricating oil drain lines, that extend to the exterior of the enclosure, with internal drain valves
   2. External radiator fill provision.

L. If so shown on the plans, provide a factory-mounted and wired electrical distribution panel to serve the generator set and enclosure. The provisions required include:
   1. 100-amp distribution panelboard installed inside enclosure and fed by a 120/208VAC power feeder installed by the contractor (unless shown otherwise on plans).
   2. Two duplex GFI receptacles, one inside the enclosure, and a weatherproof receptacle on the outside of the enclosure (all factory-wired).

3. Two three-way switches controlling three AC lamps mounted in vapor tight and gasketted fixtures (all factory-wired).
4. Factory-wired normal AC service from the panelboard to the engine coolant and alternator heaters, and battery charger.

2.8. SEQUENCE OF OPERATION

A. The maximum elapsed time allowed from loss of normal power to restoration of power to emergency circuits from generator through transfer switch shall be 10 seconds.

B. Generator set shall start upon receipt of a start signal from remote equipment. The start signal shall be via hardwired connection to the generator set control.

C. The generator set shall complete a time delay start period as programmed into the control.

D. The generator set control shall initiate the starting sequence for the generator set. The starting sequence shall include the following functions:
1. The control system shall verify that the engine is rotating when the starter is signaled to operate. If the engine does not rotate after two attempts, the control system shall shut down and lock out the generator set, and indicate “fail to crank” shutdown.
2. The engine shall fire and accelerate as quickly as practical to start disconnect speed. If the engine does not start, it shall complete a cycle cranking process as described elsewhere in this specification. If the engine has not started by the completion of the cycle cranking sequence, it shall be shut down and locked out, and the control system shall indicate “fail to start”.
3. The engine shall accelerate to rated speed and the alternator to rated voltage. Excitation shall be disabled until the engine has exceeded programmed idle speed, and regulated to prevent over voltage conditions and oscillation as the engine accelerates and the alternator builds to rated voltage.
4. On reaching rated speed and voltage, the generator set shall operate as dictated by the control system in isochronous, synchronize, load share, load demand or load govern state.

E. When all start signals have been removed from the generator set, it shall complete a time delay stop sequence. The duration of the time delay stop period shall be adjustable by the operator.

F. On completion of the time delay stop period, the generator set control shall switch off the excitation system and shall shut down.

G. Any start signal received after the time stop sequence has begun shall immediately terminate the stopping sequence and return the generator set to isochronous operation.

PART 3 - EXECUTION

3.1. SUBMITTALS.

A. Within 10 days after award of contract, provide six sets of the following information for review:

1. Manufacturer's product literature and performance data, sufficient to verify compliance to specification requirements.
2. Where generator is to be fed from a dedicated natural gas fuel service, a letter from the utility source acknowledging availability of the necessary gas service along with all associated requirements of the utility provider.
3. A paragraph by paragraph specification compliance statement, describing the differences between the specified and the proposed equipment.
4. Manufacturer's certification of prototype testing.
5. Manufacturer's published warranty documents.
6. Shop drawings showing plan and elevation views with certified overall dimensions, as well as wiring interconnection details.
7. Interconnection wiring diagrams showing all external connections required; with field wiring terminals marked in a consistent point-to-point manner.
8. Generator sizing software report(s) showing compliance with all specification requirements and any additional motor starting requirements indicated in contract documents.
9. Time-current-curves demonstrating that the generator alternator relaying or breaker protective device(s) provide proper protection for the alternator by a comparison of the trip characteristic of the breaker with the thermal damage characteristic of the alternator.
10. Manufacturer's installation instructions.

3.2. FACTORY TESTING.

A. The generator set supplier shall perform a complete operational test on the generator set prior to shipping from the factory. A certified test report shall be provided. Equipment supplied shall be fully tested at the factory for function and performance.

B. Factory testing may be witnessed by the owner and consulting engineer. Costs for travel expenses will be the responsibility of the owner and consulting engineer. Supplier is responsible to provide two weeks notice for testing.

C. Generator set factory tests on the equipment shall be performed at rated load and rated power factor. Generator sets that have not been factory tested at rated power factor will not be acceptable. Tests shall include: run at full load, maximum power, voltage regulation, transient and steady-state governing, single step load pickup, and function of safety shutdowns.

3.3. INSTALLATION

A. Equipment shall be installed by the contractor in accordance with final submittals and contract documents. Installation shall comply with applicable state and local codes as required by the authority having jurisdiction. Install equipment in accordance with manufacturer's instructions and instructions included in the listing or labeling of UL listed products.

B. Installation of equipment shall include furnishing and installing all interconnecting wiring, fuel lines, etc. between all major equipment provided for the on-site power system. The contractor shall also perform interconnecting wiring between equipment sections (when required), under the supervision of the equipment supplier.

C. Generator equipment shall be installed on elevated platform in strict compliance with structural engineer's and equipment supplier's direction. Equipment shall be permanently fastened to the platform in accordance with manufacturer's instructions and seismic requirements of the site.

D. Contractor shall be responsible for coordinating (prior to providing submittal data) and providing complete engine fuel system, including gas service from the local gas utility company, all piping, pressure regulators, strainers, control valves, etc. as required for a fully-functional, code-compliant fuel system. Entire installation shall be provided in strict conformance with all recommendations and requirements of the generator manufacturer. All costs (including aid-to-construction costs from the local gas company where the generator is to be fed directly from a dedicated natural gas service) shall be included in bid cost. The fuel system shall be plumbed to the generator set skid for ease of site connections to the generator set.

E. Remote stop station type, labeling and location shall be submitted by contractor to engineer and local fire marshal for approval prior to rough-in. Location shall be outside the generator enclosure (where so installed within a room) or elsewhere on the premises where the prime mover is located outside the building. Contractor shall provide all interconnections from remote stop station to generator set as required by generator set supplier for a fully-functional system.

F. Equipment shall be initially started and operated by representatives of the manufacturer.

G. All equipment shall be physically inspected for damage. Scratches and other installation damage shall be repaired prior to final system testing. Equipment shall be thoroughly cleaned to remove all dirt and construction debris prior to initial operation and final testing of the system.

3.4. ON-SITE ACCEPTANCE TEST:

A. The complete installation shall be tested for compliance with the specification following completion of all site work. Testing shall be conducted by representatives of the manufacturer, with required fuel supplied by Contractor. The Engineer shall be notified in advance and shall have the option to witness the tests.

B. Installation acceptance tests to be conducted on-site shall include the following (performed in accordance with NFPA 110):
   1. "Cold start" test.
   2. Four (4) hour full load test. Provide resistive load banks and make temporary connections as required.
   3. One step rated load pickup test.
   4. Power failure test on the entire installed system. This test shall be conducted by opening the power supply from the utility service, and observing proper operation of the system for at least 2 hours. Coordinate timing and obtain approval for start of test with site personnel.

3.5. TRAINING

A. The equipment supplier shall provide training for the facility operating personnel covering

operation and maintenance of the equipment provided. The training program shall be not less than 4 hours in duration and the class size shall be limited to not less than 5 persons. Training date shall be coordinated with the facility owner.

3.6. SERVICE AND SUPPORT

A. The manufacturer of the generator set shall maintain service parts inventory at a central location which is accessible to the service location 24 hours per day, 365 days per year.

B. The generator set shall be distributed and serviced by a local service organization that is trained and factory certified in generator set service. The supplier shall maintain an inventory of critical replacement parts at the local service organization, and in service vehicles. The service organization shall be on call 24 hours per day, 365 days per year.

C. The manufacturer of the generator set shall own, maintain and make available (to engineer, free of charge) generator set sizing software that calculates voltage dip, frequency dip, THDI and THDV of proposed generator/alternator set using the following inputs:
   1. Summary of step loads including load type (across-the-line motor, VFD, Fire Pump, Fluorescent Lighting, UPS, etc.).
   2. Generator Set Duty (Standby, Prime, Continuous).
   3. Maximum Ambient Temperature.
   4. Project site altitude.
   5. Generator Fuel type.
   6. Voltage/Phase/Frequency.

D. The manufacturer shall maintain model and serial number records of each generator set provided for at least 20 years.

3.7. WARRANTY

A. The generator set and associated equipment shall be warranted for a period of not less than 2 years from the date of commissioning against defects in materials and workmanship.

B. The warranty shall be comprehensive. No deductibles shall be allowed for travel time, service hours, repair parts cost, etc.

END OF SECTION 263213

SECTION 263623 - AUTOMATIC TRANSFER SWITCHES

PART 1 - GENERAL

1.1. SCOPE

A. Provide complete factory assembled power transfer equipment with field programmable digital electronic controls designed for fully automatic operation and including: surge voltage isolation, voltage sensors on all phases of both sources, power switch mechanism, permanently attached manual operation provisions, positive mechanical and electrical interlocking, and mechanically held contacts for both sources.

B. The generator set manufacturer shall warrant transfer switches to provide a single source of responsibility for all the products provided. Technicians specifically trained to support the product shall service the transfer switches.

1.2. CODES AND STANDARDS

A. The automatic transfer switch installation and application shall conform to the requirements of the following codes and standards:
1. CSA 282, Emergency Electrical Power Supply for Buildings
2. NFPA70 – National Electrical Code. Equipment shall be suitable for use in systems in compliance to Article 700, 701, and 702.
3. NFPA99 – Essential Electrical Systems for Health Care Facilities
4. NFPA110 – Emergency and Standby Power Systems. The transfer switch shall meet all requirements for Level 1 systems.
5. IEEE446 – Recommended Practice for Emergency and Standby Power Systems for Commercial and Industrial Applications.
6. NEMA ICS10-1993 – AC Automatic Transfer Switches.

B. The transfer switch assembly shall comply with the following standards:
1. CSA C22.2, No. 14 – M91 Industrial Control Equipment.
2. EN55011, Class B Radiated Emissions
3. EN55011, Class B Conducted Emissions
4. IEC 1000-4-5 (EN 61000-4-5); AC Surge Immunity.
5. IEC 1000-4-4 (EN 61000-4-4) Fast Transients Immunity
6. IEC 1000-4-2 (EN 61000-4-2) Electrostatic Discharge Immunity
7. IEC 1000-4-3 (EN 61000-4-3) Radiated Field Immunity
8. IEC 1000-4-6 Conducted Field Immunity
9. IEC 1000-4-11 Voltage Dip Immunity.
10. IEEE 62.41, AC Voltage Surge Immunity.
11. IEEE 62.45, AC Voltage Surge.
12. UL1008 – Transfer Switches. Transfer switches shall be UL1008 listed. UL1008 transfer switches may be supplied in UL891 enclosures if necessary to meet the physical requirements of the project.

C. The transfer switch manufacturer shall be certified to ISO 9001 International Quality Standard

and shall have third party certification verifying quality assurance in design/development, production, installation, and service, in accordance with ISO 9001.

1.3. ACCEPTABLE MANUFACTURERS

A. Cummins/Onan

B. Caterpillar

C. Generac

D. Kohler

E. Zenith

F. Russelectric

G. ASCO

H. Eaton

PART 2 - PRODUCTS

2.1. POWER TRANSFER SWITCH

A. Ratings
1. Refer to the project drawings for specifications on the sizes and types of transfer switch equipment, withstand and closing ratings, voltage and ampere ratings, enclosure type, and accessories.
2. Main contacts shall be rated for 600 Volts AC minimum.
3. Transfer switches shall be rated to carry 100 percent of rated current continuously in the enclosure supplied, in ambient temperatures of -40 to +60 degrees C, relative humidity up to 95% (non-condensing), and altitudes up to 10,000 feet (3000M).
4. Transfer switch equipment shall have withstand and closing ratings (WCR) in RMS symmetrical amperes equal to or greater than the required ratings shown on the drawings (at the specified voltage). When a power distribution system electrical study (including short circuit stud, etc.) is a part of the project, contractor shall further verify that all proposed equipment is properly rated (per the results of the study) prior to submitting shop drawings. The transfer switch and its upstream protection shall be coordinated. The transfer switch shall be third party listed and labeled for use with the specific protective device(s) installed in the application.

B. Construction
1. Transfer switches shall be double-throw, electrically and mechanically interlocked, and mechanically held in the source 1 and source 2 positions. The transfer switch shall be specifically designed to transfer to the best available source if it inadvertently stops in a neutral position.
2. Transfer switches shall be of the Programmed (Delayed) Transition type. Transfer switches rated through 1000 amperes shall be equipped with permanently attached

manual operating handles and quick-break, quick-make over-center contact mechanisms. Transfer switches over 1000 amperes shall be equipped with manual operators for service use only under de-energized conditions.

3. The switch shall completely disconnect the load from both sources for an adjustable period of time to allow regenerative voltage to decay to a safe level prior to connecting to the new source.
4. Main switch contacts shall be high-pressure silver alloy. Contact assemblies shall have arc chutes for positive arc extinguishing. Arc chutes shall have insulating covers to prevent inter-phase flashover.
5. All wiring shall be UL listed 105 degree C, 600 volt rated, and sized as required. Each wire, device or function shall be identified with a source and destination by silk-screen or similar permanent identification. Circuit boards shall be connected wiring harnesses by means of locking disconnect plug(s), to allow the control system to be easily disconnected and serviced without disconnecting power from the transfer switch mechanism.
6. Bus structures shall be constructed from silver plated copper or tin plated aluminum with bolted joints for all three phases, with a full neutral, and a 1/4 x 2 inch ground bus extending through all sections.
7. The framework and all other sheet metal components of the system shall be primed with a rust-inhibiting primer, and finished with two coats of satin finish ANSI 61 gray enamel, or manufacturer's standard color.
8. All door mounted control components shall be industrial type oil-tight devices with contact ratings a minimum of twice the maximum circuit ampacity they are controlling. Toggle switches and other light duty and durability control devices are not acceptable. Indicator lamps shall be high intensity LED type devices. Indicator lamp condition (on or off) shall be easily visible in bright room lighting conditions.
9. Power transfer switch shall be provided with flame retardant transparent covers to allow viewing of switch contact operation or shall be indicated by mechanical flags. Barriers shall be provided to prevent inadvertent contact with any voltage of greater than 50VDC.
10. Transfer switches shall be 3-pole with a solid neutral bus and lugs. The neutral bus shall be sized to carry 100% of the current designated on the switch rating.

C. Connections

1. Field control connections shall be made on a common terminal block that is clearly and permanently labeled.
2. Transfer switch shall be provided with AL/CU compression lugs suitable for the quantities and sizes of power conductors required.

2.2. TRANSFER SWITCH CONTROL

A. Operator Panel. Each transfer switch shall be provided with a control panel to allow the operator to view the status and control operation of the transfer switch. The operator panel shall be permanently labeled for switch and control functions. The operator panel shall be provided with the following features and capabilities.

1. High intensity LED lamps to indicate the source that the load is connected to (source 1 or source 2); and which source(s) are available. Source available LED indicators shall operate from the control microprocessor to indicate the true condition of the sources as sensed by the control.

2. High intensity LED lamps to indicate that the transfer switch is “not in auto” (due to control being disabled or due to bypass switch (when used) enabled or in operation) and “Test/Exercise Active” to indicate that the control system is testing or exercising the generator set.
3. “OVERRIDE” pushbutton to cause the transfer switch to bypass any active time delays for start, transfer, and retransfer and immediately proceed with its next logical operation.
4. “TEST” pushbutton to initiate a preprogrammed test sequence for the generator set and transfer switch. The transfer switch shall be programmable for test with load or test without load.
5. “RESET/LAMP TEST” pushbutton that will clear any faults present in the control, or simultaneously test all lamps on the panel by lighting them.
6. The control system shall continuously log information on the number of hours each source has been connected to the load, the number of times transferred, and the total number of times each source has failed. This information shall be available via an operator display panel.
7. Vacuum fluorescent alphanumeric display panel with push-button navigation switches. The display shall be clearly visible in both bright (sunlight) and no light conditions. It shall be visible over an angle of at least 120 degrees. The Alphanumeric display panel shall be capable of providing the following functions and capabilities:
   a. Display source condition information, including AC voltage for each phase of normal and emergency source, frequency of each source. Voltage for all three phases shall be displayed on a single screen for easy viewing of voltage balance. Line to neutral voltages shall be displayed for 4-wire systems.
   b. Display source status, to indicate source is connected or not connected.
   c. The display panel shall allow the operator to view and make the following adjustments in the control system, after entering an access code:
      1) Set nominal voltage and frequency for the transfer switch.
      2) Adjust voltage and frequency sensor operation set points.
      3) Set up time clock functions.
      4) Set up load sequence functions.
      5) Enable or disable control functions in the transfer switch, including program transition.
      6) Set up exercise and load test operation conditions, as well as normal system time delays for transfer time, time delay start, stop, transfer, and retransfer.
   d. Display Real time Clock data, including date, and time in hours, minutes, and seconds. The real time clock shall be incorporate provisions for automatic daylight savings time and leap year adjustments. The control shall also log total operating hours for the control system.
   e. Display service history for the transfer switch. Display source connected hours, to indicate the total number of hours connected to each source. Display number of times transferred, and total number of times each source has failed.
   f. Display fault history on the transfer switch, including condition, and date and time of fault. Faults to include controller checksum error, low controller DC voltage, ATS fail to close on transfer, ATS fail to close on retransfer, battery charger malfunction, network battery voltage low, network communications error.

B. Internal Controls

1. The transfer switch control system shall be configurable in the field for any operating voltage level up to 600VAC. Provide RMS voltage sensing and metering that is accurate to within plus or minus 1% of nominal voltage level. Frequency sensing shall be accurate to within plus or minus 0.2%. Voltage sensing shall be monitored based on the normal voltage at the site. Systems that utilize voltage monitoring based on standard voltage conditions that are not field configurable are not acceptable.
2. Transfer switch voltage sensors shall be close differential type, providing source availability information to the control system based on the following functions:
   a. Monitoring all phases of the normal service (source 1) for under voltage conditions (adjustable for pickup in a range of 85 to 98% of the normal voltage level and dropout in a range of 75 to 98% of normal voltage level).
   b. Monitoring all phases of the emergency service (source 2) for under voltage conditions (adjustable for pickup in a range of 85 to 98% of the normal voltage level and dropout in a range of 75 to 98% of pickup voltage level).
   c. Monitoring all phases of the normal service (source 1) and emergency service (source 2) for voltage imbalance.
   d. Monitoring all phases of the normal service (source 1) and emergency service (source 2) for loss of a single phase.
   e. Monitoring all phases of the normal service (source 1) and emergency service (source 2) for phase rotation.
   f. Monitoring all phases of the normal service (source 1) and emergency service (source 2) for over voltage conditions (adjustable for dropout over a range of 105 to 135% of normal voltage, and pickup at 95-99% of dropout voltage level).
   g. Monitoring all phases of the normal service (source 1) and emergency service (source 2) for over or under frequency conditions.
3. The transfer control shall incorporate a series of diagnostic LED lamps.
4. The transfer switch shall be configurable to control the operation time from source to source (program transition operation). The control system shall be capable of enabling or disabling this feature, and adjusting the time period to a specific value. A phase band monitor or similar device is not an acceptable alternate for this feature. The program/delayed transition time setting (time in which load is not connected to either source during transfer) shall be initially set at 10 seconds to allow motors to properly decay per MG-1 standard
5. The transfer switch shall incorporate adjustable time delays for generator set start (adjustable in a range from 0-15 seconds); transfer (adjustable in a range from 0-120 seconds); retransfer (adjustable in a range from 0-30 minutes); and generator stop (cooldown) (adjustable in a range of 0-30 minutes).
6. The transfer switch shall be configurable to accept a relay contact signal from an external device to prevent transfer to the generator service.
7. The control system shall be designed and prototype tested for operation in ambient temperatures from -40C to +70C. It shall be designed and tested to comply with the requirements of the noted voltage surge and RFI/EMI standards.
8. The control shall have optically isolated logic inputs, high isolation transformers for AC inputs, and relays on all outputs, to provide optimum protection from line voltage surges, RFI and EMI.

C. Control Interface

1. The transfer switch will provide an isolated relay contact for starting of a generator set. The relay shall be normally held open, and close to start the generator set. Output contacts shall be form C, for compatibility with any generator set.
2. Provide one set Form C auxiliary contacts on both sides, operated by transfer switch position, rated 10 amps 250 VAC.
3. The transfer switch shall provide additional relay contacts to indicate the following conditions: Utility Source Available, Load Connected to Utility, Generator Source Available, Load Connected to Generator, Pre-Transfer Warning (adjustable 0-59 second time delay).

2.3. ENCLOSURE

A. Enclosures shall be UL listed. The enclosure shall provide wire bend space in compliance to the latest version of NFPA70. The cabinet door shall include permanently mounted key type latches.

B. If not specifically indicated otherwise on plans, transfer switch equipment enclosures shall meet the following minimum requirements:
1. For dry interior locations: NEMA 1 or better (unless shown otherwise on plans).
2. For wet interior (pump stations, etc.) or exterior locations: NEMA 4X stainless steel or better (unless shown otherwise on plans).

C. The cabinet shall provide code-required wire bend space at point of entry as shown on the drawings. Manual operating handles and all control switches (other than key-operated switches) shall be accessible to authorized personnel only by opening the key-locking cabinet door. Transfer switches with manual operating handles and/or non key-operated control switches located on outside of cabinet do not meet this specification and are not acceptable.

D. Note size and access requirements for the transfer switch (and associated equipment) and provide equipment that will fit into the space allowed and comply with code-specified access requirements.

2.4. BATTERY CHARGING

A. The transfer switch/generator set combination shall be provided with a battery charger for the generator set starting batteries. Refer to Generator Sets Specification Section 263213 for specific requirements. Supply power failed indication shall be displayed on the ATS control panel.

2.5. SEQUENCE OF OPERATION

A. Programmed (Delayed) Transition Sequence of Operation
1. Normal State:
   a. Transfer switch normally connects an energized utility power source (source 1) to loads and a generator set (source 2) to the loads when normal source fails. The normal position of the transfer switch is connected to source 1 (connected to the utility), and no start signal is supplied to the genset.
2. Normal Power Failure and Restoration:

a. When the transfer switch senses a power failure on source 1, it shall complete a pre-programmed time delay start sequence, and then send a start signal to the generator set.
b. The generator set shall immediately start and accelerate to rated voltage and frequency.
c. The transfer system shall complete a programmable time delay sequence, and then transfer to source 2 by delayed (programmed) transition. The transfer switch shall accomplish this by opening the normal source contacts, and closing the alternate source contacts a predetermined time period later (to allow motor loads to decay per NEMA MG-1 standard).
d. On return of source 1 to acceptable voltage and frequency levels, the control system shall initiate a time delay retransfer sequence. On completion of the time delay sequence, the transfer switch shall operate to connect the loads to the normal source by opening the alternate source contacts, and closing the normal source contacts a predetermined time period later (to allow motor loads to decay per NEMA MG-1 standard). The timing sequence for the contact operation shall be programmable in the controller. The control system shall transfer loads back to source 1 in the reverse sequence to that which was used to connect loads to source 2.
e. If the generator set fails during this period and normal source is available, the transfer switch shall automatically reconnect the system loads to the normal service.
f. The transfer switch shall operate the generator set unloaded for a cooldown period, and then remove the start signal from the generator set.

3. Generator Set Exercise (Test) With Load Mode (Delayed (programmed)Transition). The control system shall be configurable to test the generator set under load. In this mode, the transfer switch shall control the generator set in the following sequence:
   a. Transfer switch shall initiate the exercise sequence at a time indicated in the exercise timer program, or when manually initiated by the operator.
   b. The transfer switch shall issue a compatible start command to the generator set as follows:
      1) On generators rated 50kW and greater, the transfer switch shall cause the generator set to start and run at idle until it has reached normal operating temperature. When the generator set has reached normal operating temperature or after an adjustable time period (whichever is shorter), the control system shall accelerate the generator set to rated voltage and frequency.
      2) On generators rated less than 50kW, the generator set shall immediately start and accelerate to rated voltage and frequency.
   c. When the control systems senses the generator set at rated voltage and frequency, it shall operate to connect the loads to the generator set by opening the normal source contacts, and closing the alternate source contacts a predetermined time period later (to allow motor loads to decay per NEMA MG-1 standard). The timing sequence for the contact operation shall be programmable in the controller.
   d. The generator set shall operate connected to the load for the duration of the exercise period.

e. On completion of the exercise period, the transfer switch shall operate to connect the loads to the normal source by opening the alternate source contacts, and closing the normal source contacts a predetermined time period later (to allow motor loads to decay per NEMA MG-1 standard). The timing sequence for the contact operation shall be programmable in the controller.

f. The transfer switch shall operate the generator set unloaded for a cooldown period, and then remove the start signal from the generator set.

g. If the normal power fails at any time when the generator set is running, the transfer switch shall immediately connect the system loads to the generator set.

h. If the generator set fails during the exercise period and normal source is available, the transfer switch shall automatically reconnect the system loads to the normal service.

4. Generator Set Exercise (Test) Without Load Mode. The control system shall be configurable to test the generator set without transfer switch load connected. In this mode, the transfer switch shall control the generator set in the following sequence:

a. Transfer switch shall initiate the exercise sequence at a time indicated in the exercise timer program, or when manually initiated by the operator.

b. The transfer switch shall issue a compatible start command to the generator set as follows:

1) On generators rated 50kW and greater, the transfer switch shall cause the generator set to start and run at idle until it has reached normal operating temperature. When the generator set has reached normal operating temperature or after an adjustable time period (whichever is shorter), the control system shall accelerate the generator set to rated voltage and frequency.

2) On generators rated less than 50kW, the generator set shall immediately start and accelerate to rated voltage and frequency.

c. When the control systems senses the generator set at rated voltage and frequency, it shall operate the generator set unloaded for the duration of the exercise period.

d. At the completion of the exercise period, the transfer switch shall remove the start signal from the generator set. If the normal power fails at any time when the generator set is running, the transfer switch shall immediately connect the system loads to the generator set.

PART 3 - EXECUTION

3.1. POWER COMPANY APPROVAL

A. The transfer switch shall be designed to meet all applicable power company requirements for connection to the power company's system, and if applicable, shall be on the power company's approved list of automatic transfer switches. Contractor shall ensure that transfer switch is specifically approved by power company for connection to their system prior to purchasing the transfer switch.

3.2. FACTORY TESTING

A. The transfer switch manufacturer shall perform a complete operational test on the transfer

switch prior to shipping from the factory. A certified test report shall be submitted. Test process shall include calibration of voltage sensors.

3.3. SERVICE AND SUPPORT

A. The manufacturer of the transfer switch shall maintain service parts inventory at a central location which is accessible to the service location 24 hours per day, 365 days per year.

B. The transfer switch shall be serviced by a local service organization that is trained and factory certified in both generator set and transfer switch service. The supplier shall maintain an inventory of critical replacement parts at the local service organization, and in service vehicles. The service organization shall be on call 24 hours per day, 365 days per year.

C. The manufacturer shall maintain model and serial number records of each transfer switch provided for at least 20 years.

D. After generator set installation, the generator set supplier shall conduct a complete operation, basic maintenance, and emergency service seminar for up to 5 persons employed by the facility owner. The seminar shall include instruction on operation of the transfer equipment, normal testing and exercise, adjustments to the control system, use of the PC based service and maintenance tools provided under this contract, and emergency operation procedures. The class duration shall be at least 4 hours in length, and include practical operation with the installed equipment.

3.4. WARRANTY

A. The automatic transfer equipment shall be warranted (by the generator supplier when a generator is supplied within the project) for a period of not less than 2 years from the date of commissioning against defects in materials and workmanship.

B. The warranty shall be comprehensive. No deductibles shall be allowed for travel time, service hours, repair parts cost, etc.

END OF SECTION 263623

SECTION 264300 - SURGE PROTECTIVE DEVICES

PART 1 - GENERAL

1.1. RELATED DOCUMENTS

A. Drawings and general provisions of the Contract, including General and Supplementary Conditions and Division 01 Specification Sections, apply to this Section.

1.2. SUMMARY

A. Section includes field-mounted SPDs for low-voltage (<1000 V) power distribution and control equipment.

B. The specified unit(s) shall provide effective high energy transient voltage surge suppression, surge current diversion and high frequency noise attenuation in all electrical modes for equipment connected downstream from the facility's meter or load side of the main overcurrent device. The unit(s) shall be connected in parallel with the facility's wiring system.

C. The unit(s) shall be designed and manufactured in North America by a qualified manufacturer of suppression filter system equipment. The qualified manufacturer shall have been engaged in the commercial design and manufacturer of such products for minimum of ten (10) years.

D. All products that are submitted according to these specification will be required to meet this specification in it's entirety for both service and distribution TVSS systems. Any product that is submitted and does not comply with all parts of this specification will be subject to rejection.

1.3. DEFINITIONS

A. VPR: Voltage Protection Rating.

B. SPD: Surge Protective Device(s)

C. $I_{(n)}$: Nominal Discharge Current

1.4. SUBMITTALS

A. See specification section 260500.

B. Product Data: For each type of product indicated. Include:
1. Maximum Single Impulse Surge Current Rating.
2. Surge Life (Repetitive Surge) Rating.
3. UL1449 (Latest Edition) Voltage Protection Ratings (VPR).
4. UL1449 (Latest Edition) Nominal Discharge Current (In).
5. Product dimensions and weights.
6. Furnished specialties and accessories.

C. Qualification Data:

D. Safety Agency File Number.

E. ISO 9001-2008 Certification.

F. ISO 1401-2001 Certification.

G. Operation and Maintenance Data: For SPDs to include all submittal data and any applicable operation and maintenance manuals.

H. Warranties: Sample of special warranties.

1.5. QUALITY ASSURANCE

A. Electrical Components, Devices, and Accessories: Listed and labeled as defined in NFPA 70, by a testing agency, and marked for intended location and application.

B. The unit shall be UL 1449 Listed and CUL Approved as a Surge Protective Device and UL 1283 Listed as an Electromagnetic Interference Filter

C. Provide 2nd party certified data demonstrating SPD response to ANSI/IEEE C62.41.2-2002 standard waveforms when tested according to IEEE C62.45.

D. Comply with NFPA 70.

E. All SPDs provided within this project at the service entrance, distribution panels, and sub-panels shall be from the same manufacturer.

1.6. PROJECT CONDITIONS

A. Service Conditions: Rate SPDs for continuous operation under the following conditions unless otherwise indicated:
1. Maximum Continuous Operating Voltage: Not less than 115 percent of nominal system operating voltage.
2. Operating Temperature: 30 to 150 deg F.
3. Humidity: 0 to 95 percent, non-condensing.
4. Altitude: Less than 13,000 feet above sea level.

1.7. COORDINATION

A. Where field-mounted SPD's are specifically shown on plans, coordinate locations of field-mounted SPDs to allow adequate clearances for maintenance.

1.8. WARRANTY

A. Special Warranty: Manufacturer's standard form in which manufacturer agrees to repair or replace components of surge suppressors that fail in materials or workmanship within specified warranty period.

1. Warranty Period: 10 years from date of Substantial Completion.

1.9. EXTRA MATERIALS

A. Furnish extra materials that match products installed and that are packaged with protective covering for storage and identified with labels describing contents.
   1. Replaceable Protection Modules: 1 of each size and type installed, where field-replaceable modular SPDs are provided.
   2. Fuses: 1 of each size and type installed, where field-replaceable fuses are provided.

PART 2 - PRODUCTS

2.1. SURGE PROTECTIVE DEVICES

A. Manufacturer:
   1. Surge Protective Devices shall be as manufactured by the distribution equipment manufacturer (Square D, etc.) or Surge Suppression Inc.

B. Each Surge Protective Device shall:
   1. Be UL 1449 (Latest Edition) listed.
   2. Have short-circuit current rating complying with UL 1449 (Latest Edition), that matches or exceeds the short-circuit rating of the associated distribution equipment.
   3. Be designed to withstand a maximum continuous operating voltage (MCOV) of not less than 115% of nominal RMS voltage.
   4. Have fuses, rated at 200-kA interrupting capacity.
   5. Have a minimum UL 1449 Nominal Discharge Current (I_n) Rating of 20kA.
   6. Be fabricated using bolted compression lugs.
   7. Provide suppression for all ten (10) modes of protection.
   8. Have LED indicator lights for power and protection status of each phase.
   9. Have audible alarm, with silencing switch, to indicate when protection has failed.
   10. Have form-C contacts rated at 2 A and 24-V ac minimum, one normally open and one normally closed, for remote monitoring of protection status. Contacts shall reverse on failure of any surge diversion module or on opening of any current-limiting device. Coordinate with facility monitoring and control system if monitoring by that system is required by plans or other specifications.
   11. Have six-digit transient-event counter, mounted to front of equipment door, set to totalize transient surges (externally mounted SPD's may have the transient –event counter monted on the visible face of the SPD).
   12. Meet all UL 96A requirements (for Lightning Protection Systems) where the device is installed at a service entrance of the facility. At a minimum, these devices shall:
      a. Be marked as Type 1 or Type 2 SPDs with product Identity consisting of "Surge Protective Device" or "SPD", and identifying all ratings so required by UL96A and the 4 digit alpha numeric Control Number.
      b. Have a minimum UL 1449 Nominal Discharge Current (I_n) Rating of 20kA.
      c. Be UL listed and labeled with holographic label.

C. Peak Single-Impulse Surge Current Rating shall be meet the following minimums unless specifically shown otherwise on plans:

Application	Per Phase	Per Mode
Service Entrance Devices	240 kA	120 kA
Downstream Devices	160 kA	80 kA

D. The ANSI/UL 1449 voltage protection rating (VPR) in grounded wye circuits, the SPDs shall not exceed the following:

Modes	208Y/120V	480Y/277V	600Y/347V
L-N,L-G, N-G	800	1200	1500
L-L	1200	2000	2500

E. The ANSI /UL 1449 VPR for 240/120 V, 3-wire or 4-wire circuits with high leg shall not exceed the following:

Modes	240/120V
L-N,L-G, N-G	1200/800

2.2. ENCLOSURES

A. Where external units are specifically specified on plans, units not mounted within electrical distribution equipment (such as switchboards, MCC's, etc.) shall be provided in enclosures with NEMA enclosure ratings that match or exceed the NEMA enclosure ratings of the equipment from which the units are fed. For example, a unit fed from a NEMA 4X stainless steel panelboard shall also be mounted within a NEMA 4X stainless steel enclosure.

PART 3 - EXECUTION

3.1. INSTALLATION

A. All SPD's shall be integrally-mounted within the associated distribution equipment unless specifically shown otherwise on plans.

B. Install SPDs at service entrance on load side, with ground lead bonded to service entrance ground.

C. Install SPDs downstream of the service entrance with conductors or buses between suppressor and points of attachment as short and straight as possible. The lead lengths between the TVSS unit and the equipment being protected shall not exceed fourteen (14) inches without approval from the engineer. Do not bond neutral and ground. Leads shall be as straight as possible with no sharp bends.

D. Where externally-mounted SPD's are specifically shown on plans, provide circuit breaker as directed by the SPD supplier as a dedicated disconnecting means for SPD unless otherwise indicated.

3.2. FIELD QUALITY CONTROL

A. Ensure that interiors are free of foreign materials and dirt.

B. Check and test switches, pushbuttons, meters for proper operation.

C. Check and test indicating lights for proper operation and color.

D. Perform manufacturer's on site field test procedures.

3.3. STARTUP SERVICE

A. Do not perform insulation resistance (MEGGER) tests of the distribution wiring equipment with the SPDs installed. Disconnect all wires, including neutral, before conducting insulation resistance tests, and reconnect immediately after the testing is over.

3.4. SYSTEM WARRANTY

A. The SPD system manufacturer shall warranty the entire SPD system against defective materials and workmanship for a period of ten (10) years from the date of substantial completion. This warranty is in effect as long as the unit is installed in compliance with the manufacturer's installation, operation, and maintenance manual, UL Listing requirements, and any applicable national or local electrical codes.

B. Any SPD device which shows evidence of failure or incorrect operation, including damage as the result of lightning strikes, during the warranty period shall be replaced by the manufacturer at no charge to the owner. Warranty will provide for multiple exchanges of any inoperable devices at any time during the warranty period which starts at the date of substantial completion of the system to which the surge suppressor is installed.

C. The manufacturer is required to have a nationwide network of factory-authorized local service representatives for repair and service of this product. The manufacturer shall have a dedicated 1-800 telephone number for service problems and questions. This number shall be manned by a knowledgeable factory employee to ensure prompt response to any emergency situation that may arise.

END OF SECTION 264300

SECTION 265000 - LIGHTING MATERIALS AND METHODS

PART 1 - GENERAL

1.1. DESCRIPTION

A. Lighting

B. Ballasts/Drivers

C. Lamps

1.2. SUBMITTALS

A. Complete submittals shall be provided identifying all lighting fixture types and options, all lamp types (where applicable) and compliance with all contract requirements. The absence of clear submittal information specifically listing exceptions/deviations from detailed contract requirements will be understood to indicated that the contractor/supplier intends to meet all contract requirements. Refer to specification section 260500 for additional requirements.

B.

PART 2 - PRODUCTS

2.1. GENERAL

A. Lighting fixtures shall be furnished as shown on plans and specified herein. It shall specifically be the responsibility of Contractor to verify exact types ceilings, walls, etc. and recessing depth of all recessed fixtures and furnish the specific mounting trims and accessories of the specified and/or accepted fixture specifically for the ceiling, wall etc. in which each fixture is to be installed.

B. Base bid manufacturers are listed on the lighting fixture schedule. Manufacturers listed without accompanying catalog numbers are responsible for meeting the quality standards, efficiency, maximum wattages and photometric distributions set by the specified product.

C. All lighting fixtures shall be so designed and shall have ballasts, drivers and other similar items so installed as to function without interruptions or failures when operating in the environment in which they are proposed to be installed. Special attention shall be given to environments with potentially high ambient temperatures such as attic spaces, exterior soffits, confined interior soffits, coves, unconditioned spaces, etc. and shall be addressed by providing fixtures with suitable high ambient temperature ratings, remote mounting of drivers/ballasts, providing approved ventilation, etc. as directed by fixture manufacturer and approved by engineer, at contractor’s expense.

2.2. LED LUMINAIRES

A. For the purpose of these specifications, LED Luminaires shall be defined as the entire LED fixture assembly including LED array, drivers, housing, electronics, etc. that compose the lighting fixture.

B. Furnish and install LED Luminaire of proper size, type, efficacy, delivered lumen output, color temperature, distribution pattern, operational life, and CRI as shown on drawings.

C. LED Luminaires shall be tested in accordance with LM-79 and LM-80 standards.

D. LED drivers shall comply with NEMA 410 standards for inrush current, etc.

E. Exterior, pole mounted LED Luminaires shall be provided with an easily-serviceable, UL recognized surge protection device that meets a minimum 10kA Category C Low operation (IECC C62.41.2-2002). Device shall be wired in front of light engine(s) and driver(s) and shall fail "open" such as to prevent fixture operation after a surge protection failure.

F. LED Luminaires shall have a guarantee-warranty of at least five years unless specifically noted otherwise on contract documents.

G. LED Luminaire assembly shall comply with ambient temperature requirements specified in General section above.

2.3. MANUFACTURER

A. Fixtures and stems shall be manufactured as shown in fixture schedule or approved equals.

B. Ballasts/drivers shall be as manufactured by Philips/Advance, GE, Lutron, Magnatec, Motorola, EldoLED or approved equal.

PART 3 - EXECUTION

3.1. INSTALLATION OF LIGHTING FIXTURES

A. Support:
   1. Support of all lighting fixtures shall be responsibility of electrical contractor. All lighting fixture supports shall be installed in accordance with lighting fixture supplier's recommendations.

B. Coordination:
   1. Contractor shall coordinate all dimensions & locations of light fixtures prior to rough-in to insure proper fit and coordination with other trades.
   2. Contractor shall verify exact ceiling types being installed and shall adjust fixture trim types accordingly (prior to submitting light fixture shop drawings).

END OF SECTION 265000

SECTION 270500 - AUXILIARY SYSTEM CABLES, 0-50V

PART 1 - GENERAL

1.1. DESCRIPTION

A. Cables rated for 0V-50V application

PART 2 - PRODUCTS

2.1. GENERAL

A. Unless specified otherwise, all cables within the scope of this specification section shall:
1. Be rated for exposed cable tray installation.
2. Be plenum rated (Class 1 Control cabling and Instrumentation cabling installed in conduit or exposed in cable tray in non-plenum areas is not required to be plenum-rated).
3. Be UL-rated for the proposed application.
4. Be multi-conductor with overall outer sheath as required by the application. The insulation of each conductor within the overall multi-conductor cable shall be uniquely color-coded. Ground conductors (when provided) within the multi-conductor cable shall have green insulation. Conductors with green insulation shall not be used for conductors other than ground.
5. Utilize copper conductors.
6. Have wire gauge as required to limit voltage drop to acceptable limits determined by the system supplier and to meet all applicable code requirements.
7. Where installed underground, within slab-on-grade or in exterior locations, be rated for wet locations.
8. Where required for specific systems, meet the specific requirements (conductor quantity, wire gauge, insulation type, shielding, etc.) of the system supplier.

2.2. INSTRUMENTATION CABLING

A. In addition to above requirements, and unless specified otherwise, Instrumentation cabling shall:
1. Be #16awg minimum.
2. Be rated for 300V.
3. Have aluminum foil shielding.
4. Have stranded, twisted conductors.
5. Have PVC insulation/jacket with ripcord.
6. Be manufactured by Belden, AlphaWire or General Cable.

2.3. CLASS 1 CONTROL CABLING (120VAC CONTROL CIRCUITS, ETC.)

A. In addition to above requirements, and unless specified otherwise, Class 1 control cabling shall:
1. Be rated for 600V.
2. Be industrial grade.

3. Have stranded conductors.
4. Have sunlight/oil-resistant PVC/Nylon insulation and jacket with ripcord.
5. Be manufactured by Belden, AlphaWire or General Cable.

2.4. CLASS 2 & 3 CONTROL CABLING (FED FROM CLASS 2 OR 3 POWER SUPPLIES)

A. In addition to above requirements, and unless specified otherwise, Class 2 & 3 control cabling shall:
1. Be rated for 300V.
2. Be shielded if so recommended by the system supplier/integrator.
3. Have twisted conductors.
4. Have plenum-rated insulation/jacket with ripcord.
5. Be manufactured by AlphaWire, Belden, General Cable, Superior Essex or West Penn.

2.5. NETWORK CABLING

A. Furnish and install all Ethernet, Fiber Optic and Backbone Copper Telephone cabling in accordance with all BICSI requirements and in accordance with other applicable specification sections.

PART 3 - EXECUTION

3.1. GENERAL INSTALLATION

A. Routing:
1. All wires and cables shall be installed in conduit unless specifically noted otherwise. Where conduit is not otherwise required by contract documents, 0-50V Cabling located within concealed, accessible ceiling spaces (such as above lay-in ceilings) may be run without conduit if the following requirements are met:
a. Cabling is plenum-rated, multi-conductor.
b. Cabling is supported by cable tray or with J-hook supports on intervals not to exceed 5’-0” on center. Cabling shall be supported solely from the cable tray or j-hooks supported from the building structure, without using piping, ductwork, conduit or other items as supports.
c. Cabling is neatly formed, bundled and tied with plenum-rated Velcro straps on intervals not to exceed 30” on center.
d. Properly-sized conduit(s) are provided wherever cabling enters an inaccessible or exposed area (such as above gyp board ceilings, within walls or through walls).
e. Cabling is not a part of a Fire Alarm System, Smoke Control System, Emergency Generator Control System or other life-safety related system.
2. End bushings shall be provided on both ends of all raceway terminations.
3. No splices shall be pulled into conduit.
4. No cabling shall be pulled until conduit is cleaned of all foreign matter.

B. Penetrations:
1. All fire/smoke barrier penetrations shall be made in accordance with a U.L. listed assembly.
2. For cabling not installed in conduit:

a. Fire/smoke barrier penetrations shall be sealed utilizing an enclosed fire-rated pathway device (STI EZ Path or equal) containing a built-in fire sealing system sufficient to maintain the hourly fire rating of the barrier being penetrated. The self-contained sealing system shall automatically adjust to the installed cable loading and shall permit cables to be installed, removed or retrofitted without the need to remove or reinstall firestop materials. The pathway shall be UL Classified and tested to the requirements of applicable ASTM/UL1479 standards.

3. For cabling installed within conduit from endpoint to endpoint:
   a. Fire/smoke barrier penetrations shall sealed utilizing fire caulk or other equivalent firestop systems around perimeters of conduits per UL requirements.
4. For cabling installed within cable trays:
   a. Fire/smoke barrier penetrations shall be sealed with one of the following methods:
      1) Continuous cable tray through the penetration, with a combination of large firestop pillows and small firestop pillows contained, supported and secured (to prevent unauthorized removal) on both sides by aluminum wire mesh and firestop putty. Firestop pillows shall be STI Series SSB or equal and Firestop putty shall be STI Spec Seal or equal.
      2) Cable tray broken at the penetration, with fire/smoke barrier penetrations sealed utilizing an enclosed fire-rated pathway device (STI EZ Path or equal) containing a built-in fire sealing system sufficient to maintain the hourly fire rating of the barrier being penetrated. The self-contained sealing system shall automatically adjust to the installed cable loading and shall permit cables to be installed, removed or retrofitted without the need to remove or reinstall firestop materials. The pathway shall be UL Classified and tested to the requirements of applicable ASTM/UL1479 standards.

C. Excess Cabling:
   1. Excess cabling shall be neatly coiled within all junction boxes, pullboxes, wireways, etc. and at all terminations as required to allow future re-termination of cabling.

D. Terminations:
   1. Cabling shall be neatly formed, bundled and tied at all terminations.

3.2. SPLICES/CONNECTIONS/TERMINATIONS:

A. Network Cabling:
   1. Network and fiber optic cabling shall be continuous from endpoint to endpoint and shall not be spliced unless specifically noted otherwise.

B. Control Cabling:
   1. Connections shall be made with T & B Sta-Kon wire joints EPT66M, complete with insulating caps. To be installed with WT161 Tool or C nest of WT11M Tool, Ideal Super - Nuts (not wire nuts), Ideal Wing Nuts, or Buchanan Elec. Products B Cap or Series 2000 Pressure connectors complete with nylon snap on insulators to be installed with C24 pressure tool.

C. Shielded cabling:
   1. Unless directed otherwise by the system supplier, 0-50V cable shielding shall be grounded at the PLC/control panel end only (not at the field device end) with a termination kit as directed by the PLC/control panel supplier.
   2. Shielded cabling shall be continuous from endpoint to endpoint and shall not be spliced without prior written approval from the Engineer.

3.3. LABELING

A. Refer to Specification Section 260553 for all labeling requirements.

END OF SECTION 270500

SECTION 311000 - SITE CLEARING

PART 1 - GENERAL

1.1 SUMMARY

A. Section Includes:

1. Removing surface debris.
2. Removing designated paving, curbs, and etc..
3. Removing designated trees, shrubs, and other plant life.
4. Removing abandoned utilities.
5. Excavating topsoil.

1.2 UNIT PRICE - MEASUREMENT AND PAYMENT

A. Site Clearing:

1. Site Clearing is not a pay item. It shall be considered an integral part of the construction, and unit prices bid for items with which Site Clearing is connected shall be full compensation for this item and for all labor, materials, and equipment required to complete the item in accordance with the drawing and specifications.
2. Includes clearing Site, loading and removing waste materials from Site, applying herbicide to designated plant life.

1.3 SUBMITTALS

A. Product Data: Herbicide; indicate compliance with applicable codes for environmental protection.

1.4 SUSTAINABLE DESIGN SUBMITTALS

A. Manufacturer's Certificate: Products meet or exceed specified sustainable design requirements.

1. Materials Resources Certificates:

a. Source for regional materials and distance from Project Site.

B. Product Cost Data: Verify compliance with Project sustainable design requirements. Exclude cost of labor and equipment to install products. Provide cost data for following products:

1. Regional products.

1.5 QUALITY ASSURANCE

A. Conform to applicable local, state, and federal codes for environmental requirements, disposal of debris, burning debris on Site, and use of herbicide.

B. Perform Work according to all local, state, and federal standards.

PART 2 - PRODUCTS

2.1 SUSTAINABILITY CHARACTERISTICS

A. Materials and Resources Characteristics:

1. Regional Materials: Extracted, processed, and manufactured within 100 miles of Project Site.

2.2 MATERIALS

A. Herbicide: Approved by authority having jurisdiction.

PART 3 - EXECUTION

3.1 EXAMINATION

A. Verify existing plant life designated to remain is tagged or identified.

B. Identify salvage area for placing removed materials.

3.2 PREPARATION

A. Call local utility line information service at not less than three (3) working days before performing Work.

1. Request underground utilities to be located and marked within and surrounding construction areas.

3.3 PROTECTION

A. Locate, identify, and protect utilities indicated to remain from damage.

B. Protect benchmarks, survey control points, and existing structures from damage or displacement.

3.4 CLEARING

A. Clear areas required for access to Site and execution of Work to minimum depth as required by drawings and specifications.

B. Remove trees and shrubs as indicated. Remove stumps, main root ball, root system to a completely, surface rock, and all necessary debris.

C. Clear undergrowth and deadwood, without disturbing subsoil.

D. Apply herbicide to remaining stumps to inhibit growth.

3.5 REMOVAL

A. Remove debris, rock, and extracted plant life from Site.

B. Partially remove paving, curbs, etc. as indicated. Neatly saw cut edges at right angle to surface.

C. Remove abandoned utilities. Indicated removal termination point for underground utilities on record documents.

D. Continuously clean-up and remove waste materials from Site. Do not allow materials to accumulate on Site.

E. Do not burn or bury materials on Site. Leave Site in clean condition.

3.6 TOPSOIL EXCAVATION

A. Excavate topsoil from areas to be further excavated, relandscaped, or regraded, marked areas without mixing with foreign materials for use in finish grading.

B. Do not excavate wet topsoil.

C. Stockpile in area designated on Site to depth not exceeding 8 feet and protect from erosion. Stockpile material and cover over with same material until disposal.

D. Remove excess topsoil not intended for reuse from Site.

END OF SECTION 311000

This page intentionally left blank.

SECTION 312316 - EXCAVATION

PART 1 - GENERAL

1.1 SUMMARY

A. Section Includes:

1. Soil densification.
2. Excavating for building foundations.
3. Excavating for paving, roads, and parking areas.
4. Excavating for slabs-on-grade.
5. Excavating for Site structures.
6. Excavating for landscaping.

1.2 UNIT PRICE - MEASUREMENT AND PAYMENT

A. Excavating Soil Materials:

1. Excavation is not a pay item. It shall be considered an integral part of the construction, and unit prices bid for items with which Excavation is connected shall be full compensation for this item and for all labor, materials, and equipment required to complete the item in accordance with the drawing and specifications.
2. Includes general excavating to required elevations, loading and placing materials in stockpile, removing from Site. Over-Excavating: Payment will not be made for over-excavated Work for replacement materials.

1.3 SUBMITTALS

A. Excavation Protection Plan: Describe sheeting, shoring, and bracing materials and installation required to protect excavations and adjacent structures and property; include structural calculations to support plan.

B. Shop Drawings: Indicate soil densification grid for each size and configuration footing requiring soils densification.

1.4 QUALITY ASSURANCE

A. Perform Work according to governing standards.

B. Prepare excavation protection plan under direct supervision of professional engineer experienced in design of this Work and licensed in State of Georgia.

PART 2 - PRODUCTS

2.1 Not Used.

PART 3 - EXECUTION

3.1 PREPARATION

A. Call local utility line information service not less than three working days before performing Work.

1. Request underground utilities to be located and marked within and surrounding construction areas.

B. Identify required lines, levels, contours, and datum.

C. Notify utility company to remove and relocate utilities.

D. Protect utilities indicated to remain from damage.

E. Protect plant life, lawns, rock outcroppings, and other features remaining as portion of final landscaping.

F. Protect bench marks, survey control points, existing structures, fences, sidewalks, paving, and curbs from excavating equipment and vehicular traffic.

3.2 SOIL DENSIFICATION - VIBRO-COMPACTION

A. Vibro-compact substrates below footing bearing surfaces for footings as indicated, before excavating Site.

B. Densify existing subsoils with relative density rating of compact to dense to attain relative density rating of very dense.

1. Densify subsoils to depth as required by design reports

C. Densification Equipment:

1. Depth Vibrator: Poker type with follower tubes with visible marking every 12 inches to enable insertion depth measurement.
2. Motion: radial in horizontal plane.
3. Eccentric Force: As required
4. Data Acquisition System: Record amps or pressure of vibrator motor over time and depth.

D. Perform densification in presence of Geotechnical Engineer directly under each footing with vibrator inserted in grid pattern at maximum 6 feet o.c.

1. Arrange compaction grid for each footing for maximum number of insertion points and with outermost insertion points within bearing area of footings.
2. Adjust compaction grid arrangement and spacing as directed by Geotechnical Engineer to achieve required densification.

E. Insert vibrator to maximum specified depth. Densify soils for 30 seconds or other time as directed by Geotechnical Engineer. Withdraw vibrator every 12 inches (300 mm) increments and repeat densification at each increment.

1. When subsurface obstruction prevents vibrator insertion to specified depth, request instructions from Geotechnical Engineer to compensate for obstruction.

F. Tolerances:

1. Maximum Deviation from Center of Completed Compaction: 8 inches from indicated position.
2. Maximum Deviation from Vertical: 4 degrees during vibrator insertion.

3.3 EXCAVATION

A. Underpin adjacent structures which may be damaged by excavation Work.

B. Excavate subsoil to accommodate building foundations, and construction operations.

C. Excavate to working elevation for piling Work.

D. Compact disturbed load bearing soil in direct contact with foundations to original bearing capacity; perform compaction according to Section 312323.

E. Slope banks with machine to angle of repose or less until shored.

F. Do not interfere with 45 degree bearing splay of foundations.

G. Grade top perimeter of excavation to prevent surface water from draining into excavation.

H. Trim excavation. Remove loose matter.

I. Remove lumped subsoil, boulders, and rock up to 1/3 cu yd measured by volume. Remove larger material as specified in Section 312323.

J. Notify Architect/Engineer of unexpected subsurface conditions.

K. Correct areas over excavated with as directed by Architect/Engineer.

L. Remove excess and unsuitable material from Site.

M. Repair or replace items indicated to remain damaged by excavation.

3.4 FIELD QUALITY CONTROL

A. Request inspection of excavation and controlled fill operations according to governing code.

B. Request visual inspection of bearing surfaces by inspection agency before installing subsequent Work.

3.5 PROTECTION

A. Prevent displacement or loose soil from falling into excavation; maintain soil stability.

B. Protect bottom of excavations and soil adjacent to and beneath foundation from freezing.

C. Protect structures, utilities and other facilities from damage caused by settlement, lateral movement, undermining, washout, and other hazards created by earth operations.

END OF SECTION 312316

SECTION 312316.01 – UNCLASSIFIED EXCAVATION FOR UTILITIES

PART 1 - GENERAL

1.1 SECTION INCLUDES

A. The work called for by this section shall consist of clearing and grubbing, loosening, loading, removing, and disposing of, in the specified manner, all wet and dry materials (including rock) encountered that must be removed for construction purposes; furnishing, placing, and maintaining all sheeting, shoring, bracing, and timbering necessary for the proper protection and safety of the work, the workmen, the public, and adjacent property and improvements; the dewatering of trenches and other excavations; the preparation of fills and embankments; the removal of unsuitable material from outside the normal limits of excavation and, where ordered by the Engineer, their replacement with suitable materials; and all other grading or excavation work incidental to or necessary for the work. This work shall be performed as specified below.

1.2 UNIT PRICE - MEASUREMENT AND PAYMENT

A. Unclassified Excavation for Utilities:

1. Unclassified Excavation for Utilities is not a pay item. It shall be considered an integral part of the construction, and unit prices bid for items with which Unclassified Excavation for Utilities is connected shall be full compensation for this item and for all labor, materials, and equipment required to complete the item in accordance with the drawing and specifications.
2. Includes clearing and grubbing, loosening, loading, removing, and disposing of, in the specified manner, all wet and dry materials (including rock) encountered that must be removed for construction purposes; furnishing, placing, and maintaining all sheeting, shoring, bracing, and timbering necessary for the proper protection and safety of the work, the workmen, the public, and adjacent property and improvements; the dewatering of trenches and other excavations; the preparation of fills and embankments; the removal of unsuitable material from outside the normal limits of excavation and, where ordered by the Engineer, their replacement with suitable materials; and all other grading or excavation work incidental to or necessary for the work.

1.3 QUALITY ASSURANCE

A. Codes and Standards: Perform excavation work in compliance with applicable requirements of governing authorities having jurisdiction.

1.4 JOB CONDITIONS

A. Existing Utilities: Locate existing underground utilities in areas of work. If utilities are to remain in place, provide adequate means of support and protection during earthwork operations.

B. Should uncharted, or incorrectly charted, piping or other utilities be encountered during excavation, consult utility owner immediately for directions. Cooperate with Owner and utility

companies in keeping respective services and facilities in operation. Repair damaged utilities to satisfaction of utility owner.

C. Do not interrupt existing utilities serving facilities occupied and used by Owner or others, during occupied hours, except when permitted in writing by Engineer and then only after acceptable temporary utility services have been provided.
   1. Provide minimum of 48-hour notice to Engineer, and receive written notice to proceed before interrupting any utility.

D. Demolish and completely remove from site existing underground utilities indicated to be removed. Coordinate with utility companies for shut-off of services if lines are active.

E. Use of Explosives: Do not bring explosives onto site or use in work.

F. Preserve from damage surveying monuments, property pins, and similar items. If disturbed or damaged by construction operations, pay the cost of restoration by a registered surveyor.

G. Costs for locating, maintaining, and protecting existing facilities shall be merged in the unit price of the pipeline.

H. Protect structures, utilities, sidewalks, pavements, and other facilities from damage caused by settlement, lateral movement, undermining, washout and other hazards created by earthwork operations.

1.5 PROTECTION

A. Protect excavations by shoring, bracing, sheet piling, underpinning, or other methods required to prevent cave-in or loose soil from falling into excavation.

B. Underpin adjacent structures which may be damaged by excavation work, including service utilities and pipe chases.

C. Notify Engineer of unexpected subsurface conditions and discontinue work in affected area until notification to resume work.

D. Protect bottom of excavations and soil adjacent to and beneath foundations from frost.

E. Grade excavation top perimeter to prevent surface water run-off into excavation.

F. Protect excavation bottoms against freezing when atmospheric temperature is less than 35°F.

G. Protect trees, shrubbery, fences, poles, and all other property and surface structures during construction operations unless their removal for purposes of construction is authorized by Engineer. Fences, poles, or other man made surface improvements which are moved or disturbed shall be restored to the original conditions after construction is completed. Trees, shrubbery, or other vegetation which are approved for removal in order to facilitate construction operations shall be removed completely, including stumps and main roots. Responsibility for damage or claims for damage caused by construction operations to shrubbery or other landscape improvements which were not authorized for removal by Engineer shall be assumed by Contractor.

1.6 SAFETY

A. Barricades, Guards, and Safety Provisions: Place and maintain barricades, fences, construction signs, torches, flashing lights, lanterns, guards, and flagmen as required during the progress of the construction work and until it is safe for traffic to use the roads and streets. Material piles, equipment, and pipe which may serve as obstructions to traffic shall be enclosed by fences or barricades and shall be protected by proper lights when the visibility is poor. The rules and regulations of OSHA and appropriate authorities respecting safety provisions shall be observed.

B. Structure Protection: Provide temporary support, protection, and maintenance of underground and surface structures, drains, sewers, and other obstructions encountered during the progress of the work. Structures which may have been disturbed shall be restored upon completion of the work.

1.7 DEVIATIONS OCCASIONED BY STRUCTURES OR UTILITIES

A. Wherever obstructions are encountered during the progress of the work which occupy the space required for the pipeline, Engineer shall have the authority to change the drawings and order a deviation from the line and grade or arrange with the Owners of the structures for the removal, relocation, or reconstruction of the obstructions.

B. Where gas, water, telephone, electrical, or other existing utilities directly interfere with the vertical or horizontal alignment of the pipeline, Engineer will order a change in grade or alignment or will arrange with the Owners of the utilities for their removal.

1.8 DUST CONTROL

A. When ordered by Engineer, furnish and distribute over traveled road surfaces which have not been fully restored an application of regular flake calcium chloride having a minimum calcium chloride content of 77 percent, or a brine solution consisting of 1.5 pound of calcium chloride and one pound of sodium chloride per 100 gallons of water applied by a pressure distributor. Rate of application shall be 3 pounds/square yard for the flake calcium chloride, and 0.48 gallon/square yard for brine solution.

B. Whenever dust control is necessary, it shall be considered an integral part of the work, and no separate payment shall be made for it.

1.9 MAINTENANCE OF TRAFFIC AND CLOSING OF STREETS

A. Carry on the work in a manner which will cause a minimum of interruption to traffic, and do not close to through travel more than two consecutive blocks, including the cross street intersected. Where traffic must cross open trenches, provide bridges at street intersections and driveways. Post signs indicating that a street is closed and necessary detour signs for the proper maintenance of traffic. Before closing any streets notify responsible municipal authorities.

PART 2 - PRODUCTS

2.1 SOIL MATERIALS

A. Satisfactory soil materials are defined as those complying with ASTM D2487 unified soil classification system groups GW, GP, GM, SM, SW and SP.

B. Unsatisfactory soil materials are defined as those complying with ASTM D2487 unified soil classification system groups GC, SC, ML, MH, CL, CH, OL, OH and PT.

C. Drainage Fill: Washed, evenly graded mixture of crushed stone, or crushed or uncrushed gravel, with 100% passing a 1-1/2" sieve and not more than 5% passing a No. 4 sieve.

D. Backfill and Fill Materials: Satisfactory soil materials of clay, rock or gravel not larger than 2" in any dimension, free of debris, waste, frozen materials, vegetable and other deleterious matter.

PART 3 - EXECUTION

3.1 PREPARATION OF THE SITE

A. Before starting construction, remove from the work site all vegetable growth (except as hereinafter excluded), debris, and/or other objectionable matter as well as any buildings and/or other structures that the drawings and/or the Engineer specifically indicate are to be removed. Dispose of this refuse material in a manner acceptable to the Engineer.

B. In certain areas it may be desirable for existing trees, shrubs, or other vegetation on the site to be preserved for the permanent landscape. Such vegetation may be shown on the drawings, specifically listed in the specifications, marked on the site, or identified by the Engineer. In no case damage or remove such growth without written permission from the Owner.

C. If the area to be excavated is occupied by trees, brush, or other vegetable growth, clear such growth and grub the excavated area, and remove all large roots to a depth of not less than 2' below the bottom of the proposed construction. Dispose of the growth removed in a manner satisfactory to the Engineer. Fill all holes or cavities created during this work that extend below the subgrade elevation with suitable material, and compact to the same density as the surrounding material.

D. Trees, cultivated shrubs, etc., that are situated within public rights-of-way and/or construction easements through private property but not directly within the excavation area shall remain undisturbed unless it is necessary to remove them so that the work can be performed safely and unless their removal is specifically ordered by the Engineer. Take special precautions to protect and preserve such growth throughout all stages of the construction.

E. Preparation of the site shall be considered an integral part of the excavation and one for which no separate payment shall be allowed.

3.2 EXCAVATION

A. Excavation is Unclassified, and includes excavation to subgrade elevations regardless of character of materials and obstructions encountered. It shall be understood that any reference to rock, earth, or any other material on the drawings is not to be taken as an indication of classified excavation or the quantity of either rock, earth, or any other material involved.

B. The bidder shall draw his own conclusions as to the conditions to be encountered.

3.3 UNSUITABLE MATERIALS

A. Wherever muck, quicksand, soft clay, swampy ground, or other material unsuitable for foundations, subgrade, or backfilling is encountered, remove it and continue excavation until suitable material is encountered. The material removed shall be disposed of in the manner described below. Then refill the areas excavated for this reason with 1" to 2" crushed stone up to the level of the lines, grades, and/or cross sections shown on the drawings. The top 6" of this refill shall be No. 57 crushed stone for bedding.

3.4 ROCKS AND BOULDERS

A. Any material that is encountered within the limits of the required excavation that cannot be removed by traditional excavation methods, including rock, boulders, masonry, hard pan, chert, shale, street and sidewalk pavements, and/or similar materials, shall be considered as unclassified excavation, and no separate payment will be made therefor.

B. Should rock be encountered in the excavation, remove it by hammering, chipping or otherwise. Blasting will not be allowed.

C. Excavate rock to a minimum horizontal distance of 12” outside the pipe in each direction and to a depth of not less than 12” below the bottom of the pipe if rock extends to such depth. Then backfill the space below the pipe with No. 57 crushed stone, tamp to the proper grade, and make ready for construction.

3.5 DISPOSAL OF MATERIALS

A. Whenever practicable, all materials removed by excavation that are suitable for backfilling pipe trenches or for other purposes shown on the drawings or directed by the Engineer shall be used for these purposes. Any materials not so used shall be considered waste materials and disposed of by the Contractor as specified below.

B. Waste materials may be deposited in spoil areas at locations approved by the Engineer. Waste materials shall be properly disposed of off-site if no spoil area is approved by the Engineer. Provide a copy of executed property owner agreements to Engineer. Do not leave in unsightly piles but instead spread in uniform layers, neatly level, and shape to drain. Seed as specified in Section 02920, Lawns and Grasses.

C. Once any part of the work is completed, properly dispose of all surplus or unused materials (including waste materials) left within the construction limits of that work. Leave the surface of the work in a neat and workmanlike condition, as described below.

D. The disposal of waste materials shall be considered an integral part of the excavation work and one for which no separate payment shall be allowed.

3.6 EXCAVATION FOR MANHOLES AND STRUCTURES

A. Excavation for manholes, inlets, and other incidental structures shall not be greater in horizontal area than that required to allow a 2' clearance between the outer surface of the structure and the walls of the adjacent excavation or of the sheeting used to protect it. The bottom of the excavation shall be true to the required shape and elevation shown on the drawings. No earth backfilling will be permitted under manholes, inlets, headwalls, or similar structures. Should

the Contractor excavate below the elevations shown or specified, he shall at his own expense, fill the void with either concrete or granular material approved by the Engineer.

3.7 SHEETING, SHORING AND BRACING

A. Take special care to avoid damage wherever excavation is being done. Sufficiently sheet, shore, and brace the sides of all excavations to prevent slides, cave-ins, settlement, or movement of the banks and to maintain the specified trench widths. Use solid sheets in wet, saturated, or flowing ground. All sheeting, shoring, and bracing shall have enough strength and rigidity to withstand the pressures exerted, to keep the walls of the excavation properly in place, and to protect all persons and property from injury or damage. Separate payment will not be made for sheeting, shoring, and bracing, which are considered an incidental part of the excavation work.

B. Wherever employees may be exposed to moving ground or cave-ins, shore and lay back exposed earth excavation surfaces more than 5' high to a stable slope, or else provide some equivalent means of protection. Effectively protect trenches less than 5' deep when examination of the ground indicates hazardous ground movement may be expected. Guard the walls and faces of all excavations in which employees are exposed to danger from moving ground by a shoring system, sloping of the ground, or some equivalent protection.

C. Comply with all OSHA standards in determining where and in what manner sheeting, shoring, and bracing are to be done. The sheeting, shoring, and bracing system shall be designed by a professional engineer licensed in the State of Georgia and shall be subject to approval by the Engineer. However, such approval does not relieve the Contractor of the sole responsibility for the safety of all employees, the effectiveness of the system, and any damages or injuries resulting from the lack or inadequacy of sheeting, shoring, and bracing.

D. Where excavations are made adjacent to existing buildings or structures or in paved streets or alleys, take particular care to sheet, shore, and brace the sides of the excavation so as to prevent any undermining of or settlement beneath such structures or pavement. Underpin adjacent structures wherever necessary, with the approval of the Engineer.

E. Do not leave sheeting, shoring, or bracing materials in place unless this is called for by the drawings, ordered by the Engineer, or deemed necessary or advisable for the safety or protection of the new or existing work or features. Remove these materials in such a manner that the new structure or any existing structures or property, whether public or private, will not be endangered or damaged and that cave-ins and slides are avoided.

F. Fill and compact all holes and voids left in the work by the removal of sheeting, shoring, or bracing as specified herein.

G. The Contractor may use a trench box, which is a prefabricated movable trench shield composed of steel plates welded to a heavy steel frame. The trench box shall be designed to provide protection equal to or greater than that of an appropriate shoring system.

H. Dewatering: Prevent surface water and subsurface or ground water from flowing into excavations and from flooding project site and surrounding area.

I. Do not allow water to accumulate in excavations. Remove water to prevent softening of subgrade foundation bottoms, undercutting footings, and soil changes detrimental to stability of subgrades and foundations. Provide and maintain pumps, well points, sumps, suction and

discharge lines, and other dewatering system components necessary to convey water away from excavations.

J. Establish and maintain temporary drainage ditches and other diversions outside excavation limits to convey rain water and water removed from excavations to collecting or run-off areas. Do not use trench excavations as temporary drainage ditches.

3.8 BORROW EXCAVATION

A. Whenever the backfill of excavated areas or the placement of embankments requires more material than is available from authorized excavations, or whenever the backfill material from such excavations is unsuitable, then obtain additional material from other sources. This may require the opening of borrow pits at points accessible to the work. In such cases, make suitable arrangements with the property owner and pay all incidental costs, including any royalties, for the use of the borrowed material. Before a borrow pit is opened, the quality and suitability of its material shall be approved by the Engineer.

B. Excavate borrow pits in such a way that the remaining surfaces and slopes are reasonably smooth and that adequate drainage is provided over the entire area. Construct drainage ditches wherever necessary to provide outlets for water to the nearest natural channel, thus preventing the formation of pools in the pit area. Leave the sides of borrow pit cuts at a maximum slope of 2:1 unless otherwise directed by the Engineer.

C. Properly clear and grub borrow pits, and remove all objectionable matter from the borrow pit material before placing it in the backfill.

D. The taking of materials from borrow pits for use in the construction of backfill, fills, or embankments shall be considered an incidental part of the work; no separate payment shall be made for this.

3.9 BACKFILLING

A. Conduct backfilling around manholes, inlets, outfalls, and/or structures in the same manner as specified for water lines, gravity sewers and/or force mains except that even greater care is necessary to prevent damage to the utility structure.

B. Perform backfilling so as not to disturb or injure any pipe and/or structure against which the backfill is being placed. If any pipe or structure is damaged and/or displaced during backfilling, open up the backfill and make whatever repairs are necessary.

3.10 MAINTENANCE

A. Seed and maintain in good condition all excavated areas, trenches, fills, embankments, and channels until final acceptance by the Owner.

B. Maintain trench backfill at the approximate level of the original ground surface by periodically adding backfill material wherever necessary and whenever directed to do so by the Engineer. Continue such maintenance until final acceptance of the project, or until the Engineer issues a written release.

3.11 SLOPES

A. Neatly trim all open cut slopes, and finish to conform either with the slope lines shown on the drawings or the directions of the Engineer. Leave the finished surfaces of bottom and sides in reasonably smooth and uniform planes like those normally obtainable with hand tools, though the Contractor will not be required to use hand methods if he is able to obtain the required degree of evenness with mechanical equipment. Conduct grading operations so that material is not removed or loosened beyond the required slope.

END OF SECTION 312316.01

SECTION 312319 - DEWATERING

PART 1 - GENERAL

1.1 SUMMARY

A. Section Includes:

1. Dewatering system.
2. Surface water control system.
3. Monitoring wells.
4. System operation and maintenance.
5. Water disposal.

1.2 UNIT PRICE - MEASUREMENT AND PAYMENT

A. Dewatering:

1. Dewatering is not a pay item. It shall be considered an integral part of the construction, and unit prices bid for items with which Dewatering is connected shall be full compensation for this item and for all labor, materials, and equipment required to complete the item in accordance with the drawing and specifications.

1.3 DEFINITIONS

A. Dewatering includes the following:

1. Lowering of ground water table and intercepting horizontal water seepage to prevent ground water from entering excavations and trenches.
2. Reducing piezometric pressure within strata to prevent failure or heaving of excavations and trenches.
3. Disposing of removed water.

B. Surface Water Control: Removal of surface water within open excavations.

1.4 SYSTEM DESCRIPTION

A. Provide dewatering and surface water control systems to permit Work to be completed on dry and stable subgrade.

B. Furnish standby equipment stored at Project site and ready for immediate use upon failure of dewatering equipment.

C. Design dewatering systems to:

1. Lower water table within areas of excavation to permit Work to be completed on dry and stable subgrade.
2. Relieve hydrostatic pressures in confined water bearing strata below excavation to eliminate risk of uplift or other instability of excavation.
3. Prevent damage to adjacent properties, buildings, structures, utilities, and facilities from construction operations.
4. Prevent loss of fines, quick condition, or softening of foundation subgrade.
5. Maintain stability of sides and bottoms of excavations and trenches.

D. Design surface water control systems to:

1. Collect and remove surface water and seepage entering excavation.

1.5 SUBMITTALS

A. N/A

1.6 CLOSEOUT SUBMITTALS

A. Project Record Documents: Record actual locations and depths of capped wells and piping abandoned in place.

1.7 QUALITY ASSURANCE

A. Comply with authorities having jurisdiction for the following:

1. Drilling and abandoning of wells used for dewatering systems.
2. Water discharge and disposal from pumping operations.

B. Obtain permit from EPA under National Pollutant Discharge Elimination System (NPDES), for storm water discharge from construction sites.

C. Assume sole responsibility for dewatering and surface water control systems and for loss or damage resulting from partial or complete failure of protective measures and settlement or resultant damage caused by ground water control operations.

D. Perform Work in accordance with governing standards.

E. Maintain one copy of each document on site.

PART 2 - PRODUCTS

2.1 DEWATERING EQUIPMENT

A. Furnish materials in accordance with governing standards.

PART 3 - EXECUTION

3.1 EXAMINATION

A. Conduct additional borings and investigations to supplement subsurface investigations identified in Section 003100 as required to complete dewatering system design.

B. Call Local Utility Line Information service not less than (3) working days before performing Work.

1. Request underground utilities to be located and marked within and surrounding construction areas.

C. Employ licensed land surveyor to provide following documentation:

1. Survey existing adjacent buildings, structures, and improvements for position and elevation of principal elements before and after completion of dewatering operations.

3.2 PREPARATION

A. Protect existing adjacent buildings, structures, and improvements from damage caused by dewatering operations.

3.3 MONITORING WELLS

A. Install monitoring wells

B. Test each monitoring well point to verify installation is performing properly.

C. Install piezometers, calibrate, and test for proper operation.

D. Protect monitoring well standpipes from damage by construction operations.

E. Maintain accessibility to monitoring wells continuously during construction operations.

F. Maintain monitoring wells until groundwater is allowed to return to normal level.

3.4 DEWATERING SYSTEM

A. Install Work in accordance with governing standards.

3.5 SURFACE WATER CONTROL SYSTEM

A. Provide ditches, berms, and other devices to divert and drain surface water from excavation area.

B. Divert surface water and seepage water within excavation areas into sumps and pump water in accordance with requirements of agencies having jurisdiction.

C. Control and remove unanticipated water seepage into excavation.

3.6 SYSTEM OPERATION AND MAINTENANCE

A. Operate dewatering system continuously until backfilling is complete.

B. Provide 24-hour supervision of dewatering system by personnel skilled in operation, maintenance, and replacement of system components.

C. When dewatering system cannot control water within excavation, notify Architect/Engineer and stop excavation work.

D. Modify dewatering and surface water control systems when operation causes or threatens to cause damage to new construction, existing site improvements, adjacent property, or adjacent water wells.

E. Do not discontinue dewatering operations without Architect/Engineer's approval.

3.7 SYSTEM REMOVAL

A. Remove dewatering and surface water control systems after dewatering operations are discontinued.

B. Remove piezometers and monitoring wells.

C. Repair damage caused by dewatering and surface water control systems or resulting from failure of systems to protect property.

3.8 FIELD QUALITY CONTROL

A. After dewatering system is installed, perform pumping test to determine when selected pumping rate lowers water level in well below pump intake. Adjust pump speed, discharge volume, or both to ensure proper operation of each pump.

END OF SECTION 312319

SECTION 312500 - EROSION AND SEDIMENTATION CONTROLS

PART 1 - GENERAL

1.1 SUMMARY

A. The work shall include erosion and sediment control on all cut and fill operations, excavation, backfill, or other construction activities within the limits of the construction site, within any temporary or permanent easements, and within any borrow site used during the period of construction. The protection of these sites shall continue throughout the construction period. During dry weather, sprinkle the sites with water or use other means as necessary to provide dust control.

1. The Contractor shall fully comply with the guidelines as specified in the Georgia Erosion and Sedimentation Control Act of 1975 (as amended).
2. Land disturbance activity shall not commence until the Land Disturbance Permit has been obtained by the owner, provided that a permit is required for the project.
3. Compliance with the Georgia Department of Natural Resources Environmental Protection Division (EPD) must be maintained at all times. If the project disturbs more than 1 acre, the contractor will assist the owner in preparing a Notice of Intent (NOI). Contractor will not start land disturbing activities until 3 days after the NOI has been filed with EPD.
4. Use of erosion and sedimentation control measures shall be included in all permanent construction work and temporary construction work outside the rights-of-way where necessary as a result of construction operations, such as haul roads and equipment storage sites.
5. The Erosion and sedimentation controls shown on the drawings and included in these specifications are minimal requirements. The Contractor's methods of construction may require additional erosion and sedimentation controls not indicated on the Drawings or in these Specifications.
6. The Contractor shall be solely responsible for control of erosion within the project site and prevention of sedimentation in any adjacent areas.

1.2 UNIT PRICE - MEASUREMENT AND PAYMENT

A. Erosion and sediment control:

1. Erosion and sediment control is a lump sum pay item. It shall be considered an integral part of the construction, and shall include all materials, installation labor, repair, alterations to devices and plans as dictated by the construction activities, and any and all associated appurtenances. The erosion and sedimentation control items shown on these drawings are a minimum lump sum prices for which erosion and sediment control is connected shall be full compensation for this item and for all labor, materials, and equipment required to complete the item in accordance with the drawing, associated specifications and standards specifications of the governing authorities.

1.3 QUALITY ASSURANCE

A. All erosion and sediment control work shall comply with applicable requirements of governing authorities having jurisdiction. The specifications and drawings are not represented as being comprehensive, but rather convey the intent to provide complete slope protection and erosion control for both the Owner's and adjacent property.

B. Erosion control measures shall be established at the beginning of construction and maintained during the entire period of construction. On-site areas, which are subject to severe erosion, and off-site areas which are especially vulnerable to damage from erosion and/or sedimentation, are to be identified and receive special attention.

C. All land-disturbing activities are to be planned and conducted to minimize the size of the area to be exposed at any one time, and the length of time of exposure.

D. Surface water runoff originating upgrade of exposed areas should be controlled to reduce erosion and sediment loss during the period of exposure.

E. When the increase in the peak rates and velocity of storm water runoff resulting from a land-disturbing activity is sufficient to cause accelerated erosion of the receiving stream, provide measures to control both the velocity and rate of release so as to minimize accelerated erosion and increased sedimentation of the stream.

F. All land-disturbing activities shall be planned and conducted so as to minimize off-site sedimentation discharge and damage.

G. The Contractor is responsible for cleaning out and disposing of all sediment once the storage capacity of the sediment facility is reduced by one-half.

H. Frequent inspections of erosion and sediment control measures by the Contractor are required. Repair or replacement shall be made promptly.

PART 2 - PRODUCTS

2.1 MATERIALS

A. Temporarily stabilize areas from which topsoil has been removed and topsoil stockpiles by seeding fast growing annuals such as cereal, rye, annual ryegrass, Sudan grass, and millet that provide quick protection. These annual grasses shall be seed certified by the State Department of Agriculture and shall be worked into the soil when the site is prepared for final seeding of more permanent species. To promote temporary vegetation establishment, use commercial lime and fertilizer on exposed areas subject to severe erosion.

B. Strawbales: Bales shall be either wire bound or string tied with bindings orientated around sides rather than over and under.

C. Crushed stone for stabilized construction entrance shall conform to ASTM Designation C-33, size No. 2 (1-1/2" to 2-1/2").

D. Silt fence shall be "Envirofence" preassembled silt fence by Mirafi, Inc., or its equivalent.

E. Sandbags anchored with steel rods or brush obtained from clearing operations may also be used to control sediment loss.

PART 3 - EXECUTION

3.1 PROTECTION

A. Conduct construction so as to provide the site with maximum protection from erosion at all times.

B. Conduct excavation activities to provide erosion and sediment control as follows:
1. Do not start clearing and excavation until a firm construction schedule is submitted to and approved by the Engineer. Continuously coordinate the schedule with the clearing and excavation activity.
2. Place the excavated material so as not to block any drainage area. Replace this excavated material in the trench immediately after repairs or installations have been completed and are approved by the Engineer.
3. Retain natural vegetation whenever feasible.
4. Restore and cover exposed areas subject to erosion as quickly as possible by means of seeding and mulching. Use diversion ditches or other methods as appropriate to prevent storm water from running over the exposed area until seeding is established as specified.
5. Take particular care along streams and drainage ditches so that fallen trees, debris, and excavated material will not adversely affect the streamflow. Exercise care to minimize the destruction of streambanks. Wherever the streambanks are affected by construction, reduce the slope of the streambanks to provide a suitable condition for vegetative protection. Minimize land exposure in terms of area and time.
6. Cover exposed excavated areas with mulch or vegetation.
7. Mechanically retard the rate of runoff water.
8. Trap the sediment contained in the runoff water.
9. Divert water from erosive areas.
10. Take care during the hauling of materials, etc., to keep vehicles from creating a severe erosion problem. Proper scheduling of operations and prompt repair of ruts created during this operation is necessary from this source.
11. Control dust by sprinkling or other means as necessary to keep it to a minimum.
12. Stabilize roadways and driveways as soon as feasible.

C. Regrade and sod surfaces eroded or otherwise damaged during any and all construction operations.

3.2 STRAW BALE BARRIERS

A. Excavation shall be to the width of the bale and the length of the proposed barrier to a minimum depth of 4 inches.

B. Bales shall be placed in a single row, lengthwise on proposed line, with ends of adjacent bales tightly abutting one another. In swales and ditches the barrier shall extend to such a length that the bottoms of the end bales are higher in elevation than the top of the lowest middle bale.

C. Staking shall be accomplished to securely anchor bales by driving at least two stakes or rebars through each bale and a minimum of 8 inches into the ground.

D. The gaps between bales shall be filled by wedging straw.

E. The excavated soil shall be backfilled against the barrier. Backfill shall conform to ground level on the downhill side and shall be built up to 4 inches on the uphill side. Loose straw shall then be scattered over the area immediately uphill from a straw barrier.

3.3 STABILIZED CONSTRUCTION ENTRANCE

A. Stone size: Use ASTM designation C-33, size No. 2 (1-1/2" to 2-1/2"). Use crushed stone.

B. Length: As effective, but not less than 150 feet.

C. Thickness: Not less than eight (8) inches.

D. Width: The full width of all points of ingress or egress, but not less than 20 feet.

E. Washing: When necessary, wheels shall be cleaned to remove sediment prior to entrance onto public right-of-way. When washing is required, it shall be done on an area stabilized with crushed stone, which drains into an approved sediment trap or sediment basin. All sediment shall be prevented from entering any storm drain, ditch, or watercourse through use of sand bags, gravel, boards or other approved methods.

F. Maintenance: The entrance shall be maintained in a condition, which will prevent tracking or flowing of sediment onto public rights-of-way. This may require periodic top dressing with additional stone as conditions demand and repair and/or cleanout of any measures used to trap sediment. It is recommended that a layer of medium grade filter fabric be placed on the ground prior to placing stone. This would help prevent infiltration of fines into the stone. All sediment spilled, dropped, washed or tracked onto public rights-of-way shall be removed immediately.

3.4 SILT FENCING

A. Excavate a 6-inch by 6-inch trench along the lower perimeter of the site, when using premanufactured silt fencing.

B. Install the silt fence in accordance with the manufacturer's recommendations and the details shown on the plans.

C. Pile brush in a row along the perimeter of the land disturbing activities. Windrow brush along contour as close as possible. Brush may require compaction.

3.5 INLET PROTECTION

A. Excavation around the drop inlet shall be performed to accommodate the width of the bale and to a minimum depth of 4 inches.

B. Placement of bales shall be lengthwise in a single row surrounding the drop inlet. Adjacent bales shall be pressed together and loose straw then wedged between them to prevent water entering between bales.

C. Staking shall be accomplished to securely anchor bales by driving at least two stakes or rebars through each bale and a minimum of 8 inches into the soil.

D. Backfill shall consist of the excavated soil and be compacted against the straw barrier.

3.6 DUST CONTROL

A. Dust generated from the contractor's performance of the work, either inside or outside the right-of-way shall be controlled by the contractor by applying either water or calcium chloride.

B. Water and calcium chloride shall be provided in the amounts and locations in accordance with general local practice.

3.7 LAND DISTURBANCE PERMIT AND/OR GENERAL PERMIT

A. The Contractor shall fully comply with the guidelines as specified in the Georgia Erosion and Sedimentation Control Act of 1975 (as amended).

B. Land disturbance activity shall not commence until the Land Disturbance Permit has been obtained by the owner, provided that a permit is required for the project.

C. Compliance with the Georgia Department of Natural Resources Environmental Protection Division (EPD) must be maintained at all times. If the project disturbs more than 1 acre, the contractor will assist the owner in preparing a Notice of Intent (NOI). Contractor will not start land disturbing activities until 3 days after the NOI has been filed with EPD.

END OF SECTION 312500

This page intentionally left blank.

SECTION 321216 - ASPHALT PAVING

PART 1 - GENERAL

1.1 RELATED DOCUMENTS

A. Drawings and general provisions of the Contract, including General and Supplementary Conditions and Division 1 Specification Sections, apply to this Section.

1.2 SUMMARY

A. This Section includes the following:
   1. Hot-mix asphalt paving.
   2. Hot-mix asphalt patching.
   3. Hot-mix asphalt paving overlay.
   4. Pavement-marking paint.
   5. Cold milling of existing hot-mix asphalt pavement.

B. Related Sections include the following:
   1. Division 2 Section "Earthwork" for aggregate subbase and base courses and for aggregate pavement shoulders.

1.3 DEFINITIONS

A. Hot-Mix Asphalt Paving Terminology: Refer to ASTM D 8 for definitions of terms.

B. DOT: Department of Transportation.

1.4 SYSTEM DESCRIPTION

A. Provide hot-mix asphalt paving according to materials, workmanship, and other applicable requirements of standard specifications of state or local DOT.
   1. Standard Specification: City of Oneonta Standard Specifications / DOT.
   2. Measurement and payment provisions and safety program submittals included in standard specifications do not apply to this Section.

1.5 SUBMITTALS

A. Product Data: For each type of product indicated. Include technical data and tested physical and performance properties.

B. Job-Mix Designs: Certification, by authorities having jurisdiction, of approval of each job mix proposed for the Work.

1.6 QUALITY ASSURANCE

A. Manufacturer Qualifications: A qualified manufacturer.
   1. Manufacturer shall be a paving-mix manufacturer registered with and approved by authorities having jurisdiction or the DOT of the state in which Project is located.

B. Regulatory Requirements: Comply with Standards of local regulatory authority for asphalt paving work.

C. Asphalt-Paving Publication: Comply with AI MS-22, "Construction of Hot Mix Asphalt Pavements," unless more stringent requirements are indicated.

1.7 DELIVERY, STORAGE, AND HANDLING

A. Deliver pavement-marking materials to Project site in original packages with seals unbroken and bearing manufacturer's labels containing brand name and type of material, date of manufacture, and directions for storage.

B. Store pavement-marking materials in a clean, dry, protected location within temperature range required by manufacturer. Protect stored materials from direct sunlight.

1.8 PROJECT CONDITIONS

A. Environmental Limitations: Do not apply asphalt materials if subgrade is wet or excessively damp or if the following conditions are not met:
   1. Prime and Tack Coats: Minimum surface temperature of 60 deg F.
   2. Asphalt Base Course: Minimum surface temperature of 40 deg F and rising at time of placement.
   3. Asphalt Surface Course: Minimum surface temperature of 60 deg F at time of placement.

B. Pavement-Marking Paint: Proceed with pavement marking only on clean, dry surfaces and at a minimum ambient or surface temperature of 40 deg F for oil-based materials, 50 deg F for water-based materials, and not exceeding 95 deg F.

PART 2 - PRODUCTS

2.1 AGGREGATES

A. General: Use materials and gradations that have performed satisfactorily in previous installations.

B. Coarse Aggregate: ASTM D 692, sound; angular crushed stone, crushed gravel, or properly cured, crushed blast-furnace slag.

C. Fine Aggregate: ASTM D 1073, sharp-edged natural sand or sand prepared from stone, gravel, properly cured blast-furnace slag, or combinations thereof.
   1. For hot-mix asphalt, limit natural sand to a maximum of 20 percent by weight of the total aggregate mass.

D. Mineral Filler: ASTM D 242, rock or slag dust, hydraulic cement, or other inert material.

2.2 ASPHALT MATERIALS

A. Asphalt Binder: AASHTO MP 1.

B. Asphalt Cement: ASTM D 946 for penetration-graded material.

C. Prime Coat: ASTM D 2027, medium-curing cutback asphalt.

D. Prime Coat: Asphalt emulsion prime complying with local regulatory requirements.

E. Tack Coat: ASTM D 977, emulsified asphalt or ASTM D 2397, cationic emulsified asphalt, slow setting, diluted in water, of suitable grade and consistency for application.

F. Water: Potable.

G. Undersealing Asphalt: ASTM D 3141, pumping consistency.

2.3 AUXILIARY MATERIALS

A. Sand: ASTM D 1073, Grade Nos. 2 or 3.

B. Joint Sealant: ASTM D 3405, hot-applied, single-component, polymer-modified bituminous sealant.

C. Pavement-Marking Paint: Latex, waterborne emulsion, lead and chromate free, ready mixed, complying with FS TT-P-1952, with drying time of less than 3 minutes.

D. Glass Beads: AASHTO M 247, Type 1.

2.4 MIXES

A. Hot-Mix Asphalt: Dense, hot-laid, hot-mix asphalt plant mixes approved by authorities having jurisdiction and designed according to procedures in AI MS-2, "Mix Design Methods for Asphalt Concrete and Other Hot-Mix Types."
   1. Provide mixes with a history of satisfactory performance in geographical area where Project is located.
   2. Provide mixes complying with composition, grading, and tolerance requirements in ASTM D 3515 for the following nominal, maximum aggregate sizes:
      a. Base Course: 1 inch.
      b. Surface Course: 1/2 inch.

PART 3 - EXECUTION

3.1 EXAMINATION

A. Verify that subgrade is dry and in suitable condition to support paving and imposed loads.

B. Proof-roll subbase using heavy, pneumatic-tired rollers to locate areas that are unstable or that require further compaction.

C. Proceed with paving only after unsatisfactory conditions have been corrected.

3.2 PATCHING

A. Hot-Mix Asphalt Pavement: Saw cut perimeter of patch and excavate existing pavement section to sound base. Excavate rectangular or trapezoidal patches, extending 12 inches into

adjacent sound pavement, unless otherwise indicated. Cut excavation faces vertically. Remove excavated material. Recompact existing unbound-aggregate base course to form new subgrade.

B. Portland Cement Concrete Pavement: Break cracked slabs and roll as required to reseat concrete pieces firmly.
   1. Pump hot undersealing asphalt under rocking slabs until slab is stabilized or, if necessary, crack slab into pieces and roll to reseat pieces firmly.
   2. Remove disintegrated or badly cracked pavement. Excavate rectangular or trapezoidal patches, extending into adjacent sound pavement, unless otherwise indicated. Cut excavation faces vertically. Recompact existing unbound-aggregate base course to form new subgrade.

C. Tack Coat: Apply uniformly to vertical surfaces abutting or projecting into new, hot-mix asphalt paving at a rate of 0.05 to 0.15 gal./sq. yd..
   1. Allow tack coat to cure undisturbed before applying hot-mix asphalt paving.
   2. Avoid smearing or staining adjoining surfaces, appurtenances, and surroundings. Remove spillages and clean affected surfaces.

D. Patching: Fill excavated pavements with hot-mix asphalt base mix and, while still hot, compact flush with adjacent surface.

3.3 SURFACE PREPARATION

A. General: Immediately before placing asphalt materials, remove loose and deleterious material from substrate surfaces. Ensure that prepared subgrade is ready to receive paving.
   1. Sweep loose granular particles from surface of unbound-aggregate base course. Do not dislodge or disturb aggregate embedded in compacted surface of base course.

B. Prime Coat: Apply uniformly over surface of compacted unbound-aggregate base course at a rate of 0.15 to 0.50 gal./sq. yd. Apply enough material to penetrate and seal but not flood surface. Allow prime coat to cure for 72 hours minimum.
   1. If prime coat is not entirely absorbed within 24 hours after application, spread sand over surface to blot excess asphalt. Use enough sand to prevent pickup under traffic. Remove loose sand by sweeping before pavement is placed and after volatiles have evaporated.
   2. Protect primed substrate from damage until ready to receive paving.

C. Tack Coat: Apply uniformly to surfaces of existing pavement at a rate of 0.05 to 0.15 gal./sq. yd.
   1. Allow tack coat to cure undisturbed before applying hot-mix asphalt paving.
   2. Avoid smearing or staining adjoining surfaces, appurtenances, and surroundings. Remove spillages and clean affected surfaces.

3.4 HOT-MIX ASPHALT PLACING

A. Machine place hot-mix asphalt on prepared surface, spread uniformly, and strike off. Place asphalt mix by hand to areas inaccessible to equipment in a manner that prevents segregation of mix. Place each course to required grade, cross section, and thickness when compacted.
   1. Place hot-mix asphalt base course in number of lifts and thicknesses indicated.
   2. Place hot-mix asphalt surface course in single lift.
   3. Spread mix at minimum temperature of 250 deg F.

4. Begin applying mix along centerline of crown for crowned sections and on high side of one-way slopes, unless otherwise indicated.
5. Regulate paver machine speed to obtain smooth, continuous surface free of pulls and tears in asphalt-paving mat.

B. Place paving in consecutive strips not less than 10 feet wide unless infill edge strips of a lesser width are required.
1. After first strip has been placed and rolled, place succeeding strips and extend rolling to overlap previous strips. Complete a section of asphalt base course before placing asphalt surface course.

C. Promptly correct surface irregularities in paving course behind paver. Use suitable hand tools to remove excess material forming high spots. Fill depressions with hot-mix asphalt to prevent segregation of mix; use suitable hand tools to smooth surface.

3.5 JOINTS

A. Construct joints to ensure a continuous bond between adjoining paving sections. Construct joints free of depressions with same texture and smoothness as other sections of hot-mix asphalt course.
1. Clean contact surfaces and apply tack coat to joints.
2. Offset longitudinal joints, in successive courses, a minimum of 6 inches.
3. Offset transverse joints, in successive courses, a minimum of 24 inches.
4. Construct transverse joints as described in AI MS-22, "Construction of Hot Mix Asphalt Pavements."
5. Compact joints as soon as hot-mix asphalt will bear roller weight without excessive displacement.
6. Compact asphalt at joints to a density within 2 percent of specified course density.

3.6 COMPACTION

A. General: Begin compaction as soon as placed hot-mix paving will bear roller weight without excessive displacement. Compact hot-mix paving with hot, hand tampers or vibratory-plate compactors in areas inaccessible to rollers.
1. Complete compaction before mix temperature cools to 185 deg F.

B. Breakdown Rolling: Complete breakdown or initial rolling immediately after rolling joints and outside edge. Examine surface immediately after breakdown rolling for indicated crown, grade, and smoothness. Correct laydown and rolling operations to comply with requirements.

C. Intermediate Rolling: Begin intermediate rolling immediately after breakdown rolling while hot-mix asphalt is still hot enough to achieve specified density. Continue rolling until hot-mix asphalt course has been uniformly compacted to the following density:
1. Average Density: 96 percent of reference laboratory density according to AASHTO T 245, but not less than 94 percent nor greater than 100 percent.
2. Average Density: 92 percent of reference maximum theoretical density according to ASTM D 2041, but not less than 90 percent nor greater than 96 percent.

D. Finish Rolling: Finish roll paved surfaces to remove roller marks while hot-mix asphalt is still warm.

E. Edge Shaping: While surface is being compacted and finished, trim edges of pavement to proper alignment. Bevel edges while asphalt is still hot; compact thoroughly.

F. Repairs: Remove paved areas that are defective or contaminated with foreign materials and replace with fresh, hot-mix asphalt. Compact by rolling to specified density and surface smoothness.

G. Protection: After final rolling, do not permit vehicular traffic on pavement until it has cooled and hardened.

H. Erect barricades to protect paving from traffic until mixture has cooled enough not to become marked.

3.7 INSTALLATION TOLERANCES

A. Thickness: Compact each course to produce the thickness indicated within the following tolerances:
   1. Base Course: Plus or minus 1/2 inch.
   2. Surface Course: Plus 1/4 inch, no minus.

B. Surface Smoothness: Compact each course to produce a surface smoothness within the following tolerances as determined by using a 10-foot straightedge applied transversely or longitudinally to paved areas:
   1. Base Course: 1/4 inch.
   2. Surface Course: 1/8 inch.
   3. Crowned Surfaces: Test with crowned template centered and at right angle to crown. Maximum allowable variance from template is 1/4 inch.

3.8 SURFACE TREATMENTS

A. Fog Seals: Apply fog seal at a rate of 0.10 to 0.15 gal./sq. yd. to existing asphalt pavement and allow to cure. With a fine sand, lightly dust areas receiving excess fog seal.

3.9 PAVEMENT MARKING

A. Do not apply pavement-marking paint until layout, colors, and placement have been verified with Engineer.

B. Allow paving to age for 30 days before starting pavement marking.

C. Sweep and clean surface to eliminate loose material and dust.

D. Apply paint with mechanical equipment to produce pavement markings, of dimensions indicated, with uniform, straight edges. Apply at manufacturer's recommended rates to provide a minimum wet film thickness of 15 mils.
   1. Broadcast glass spheres uniformly into wet pavement markings at a rate of 6 lb/gal..

3.10 FIELD QUALITY CONTROL

A. Testing Agency: Owner will engage a qualified independent testing and inspecting agency to perform field tests and inspections and to prepare test reports.
   1. Testing agency will conduct and interpret tests and state in each report whether tested Work complies with or deviates from specified requirements.

B. Additional testing and inspecting, at Contractor's expense, will be performed to determine compliance of replaced or additional work with specified requirements.

C. Thickness: In-place compacted thickness of hot-mix asphalt courses shall be determined according to ASTM D 3549.

D. Surface Smoothness: Finished surface of each hot-mix asphalt course shall be tested for compliance with smoothness tolerances.

E. In-Place Density: Testing agency will take samples of uncompacted paving mixtures and compacted pavement according to ASTM D 979.

F. Remove and replace or install additional hot-mix asphalt where test results or measurements indicate that it does not comply with specified requirements.

3.11 DISPOSAL

A. Except for material indicated to be recycled, remove excavated materials from Project site and legally dispose of them in an EPA-approved landfill.
   1. Do not allow excavated materials to accumulate on-site.

END OF SECTION 321216

This page intentionally left blank.

SECTION 329221 – LAWNS AND GRASSES

PART 1 - GENERAL

1.1 SUMMARY

A. This Section includes seeding, sodding, and landscape replacement.

B. Landscape replacement work shall be performed in all disturbed areas and shall include, but not necessarily be limited to, all seed bed preparation; the supplying and placing of soil additives, seed, sod, and mulch wherever required by the drawings or directed by the Engineer.

1.2 DEFINITIONS

A. Finish Grade: Elevation of finished surface of planting soil.

B. Manufactured Soil: Soil produced off-site by homogeneously blending mineral soils or sand with stabilized organic soil amendments to produce topsoil or planting soil.

C. Planting Soil: Native or imported topsoil, manufactured topsoil, or surface soil modified to become topsoil; mixed with soil amendments.

D. Subgrade: Surface or elevation of subsoil remaining after completing excavation, or top surface of a fill or backfill immediately beneath planting soil. Refer to Division 1 Section "Earthwork" and "Excavation Support and Protection".

1.3 SUBMITTALS

A. Product Data: Refer to Division 1 Section "Submittal Procedures". For each type of product indicated.

B. Product certificates/certificates of inspection.

C. Planting Schedule: Indicating anticipated planting dates.

1.4 QUALITY ASSURANCE

A. No Substitutions: Do not make substitutions. Replace disturbed landscape materials with identical materials. If identical landscape material is not obtainable, submit proof of non-availability from a minimum of 6 suppliers to the Engineer for review by a Landscape Architect, together with proposal for use of equivalent material.

B. Installer's Field Supervision: Require Installer to maintain an experienced full-time supervisor on Project site when planting is in progress.

1.5 DELIVERY, STORAGE, AND HANDLING

A. Sod: Harvest, deliver, store, and handle sod according to requirements in TPI's "Specifications for Turfgrass Sod Materials" and "Specifications for Turfgrass Sod Transplanting and Installation" in its "Guideline Specifications to Turfgrass Sodding."

1.6 JOB CONDITIONS

A. Proceed with the complete landscape work as rapidly as portions of site become available, working within seasonal limitations for each kind of turf areas required.

B. Utilities: Determine location of underground utilities and perform work in a manner which will avoid possible damage. Hand cultivate as required. Maintain grade stakes set by others until removal is mutually agreed upon by parties concerned.

C. Planting Time: Plant or install materials during normal planting seasons for each type of landscape work required.

PART 2 - PRODUCTS

2.1 SEED

A. Seed Species: State-certified seed of grass species to match adjacent areas. In unplanted areas, as follows:
1. Warm Season (April 30-August 15): 100% hulled common bermuda, 2#/1000 sf.
2. Cool Season (March 1-April 30): or August 15-November 30): 100% Kentucky 31 tall fescue, 5#/1000 sf.
3. When seeding March 1 to April 1 or October 1 to November 30, add an additional 3 pounds per 1000 square feet of annual ryegrass.

2.2 TURFGRASS SOD

A. Turfgrass Sod: Approved, complying with TPI's "Specifications for Turfgrass Sod Materials" in its "Guideline Specifications to Turfgrass Sodding." Furnish viable sod of uniform density, color, and texture, strongly rooted, and capable of vigorous growth and development when planted.

B. Turfgrass Species: To match disturbed area and/or adjacent yards.

2.3 PLANTING MATERIALS

A. Topsoil: ASTM D 5268, pH range of 5.5 to 7, a minimum of 2 percent organic material content; free of stones 1 inch or larger in any dimension and other extraneous materials harmful to plant growth.
1. Topsoil Source: Reuse surface soil stockpiled on-site and supplement with imported or manufactured topsoil from off-site sources when quantities are insufficient. Verify suitability of stockpiled surface soil to produce topsoil.

B. Inorganic Soil Amendments:
1. Lime: ASTM C 602, Class T or O, agricultural limestone containing a minimum 80 percent calcium carbonate equivalent.

2. Sulfur: Granular, biodegradable, containing a minimum of 90 percent sulfur, with a minimum 99 percent passing through No. 6 sieve and a maximum 10 percent passing through No. 40 sieve.
3. Iron Sulfate: Granulated ferrous sulfate containing a minimum of 20 percent iron and 10 percent sulfur.
4. Aluminum Sulfate: Commercial grade, unadulterated.
5. Sand: Sharp, clean, washed sand, free of toxic materials.

C. Fertilizer:
1. Bonemeal: Commercial, raw or steamed, finely ground; a minimum of 1 percent nitrogen and 10 percent phosphoric acid.
2. Superphosphate: Commercial, phosphate mixture, soluble; a minimum of 20 percent available phosphoric acid.
3. Commercial Fertilizer: Complete fertilizer of neutral character furnished in standard containers that are clearly marked with the name, weight, and guaranteed analysis of the contents and that ensure proper protection in transportation and handling; and in compliance with all local, state, and federal fertilizer laws, with some elements derived from organic sources and containing recommended percentages of available plant nutrients.
4. Slow-Release Fertilizer: Granular or pelleted fertilizer consisting of 50 percent water-insoluble nitrogen, phosphorus, and potassium in the following composition:
   a. Composition: 20 percent nitrogen, 10 percent phosphorous, and 10 percent potassium, by weight.

D. Mulches:
1. Straw Mulch for Seeding Operations: Provide air-dry, clean, mildew- and seed-free, salt hay or threshed straw of wheat, rye, oats, or barley.
2. Filtration/Separation Fabric: Water permeable filtration fabric of fiberglass or polypropylene fabric.
3. Mulch and Erosion Control Matting and Blankets for Slopes:
   a. Curlex blanket excelsior blanket.
   b. Hi-Velocity curlex blanket excelsior blanket by American Excelsior Company, P.O. Box 5067, Arlington, Texas 76011.
4. Erosion Control Matting and Blankets for Ditches and Drainage Channels:
   a. Enkamat Matting #7020 by AZKO Industrial Systems, Ridgefield Business Center, Suite 18, Asheville, North Carolina 28802.
   b. Miramat 1000 by Mirafi, Inc., P.O. Box 240967, Charlotte, North Carolina 28224.
5. Straw Mulch for Landscaping Restoration: Provide air-dry, clean, mildew- and seed-free, pine straw.
6. Bark Mulch for Landscaping Restoration: Provide bark mulch as required to match adjacent areas.

2.4 PLANTING SOIL MIX

A. Planting Soil Mix: Submit proposed topsoil test results for approval.

PART 3 - EXECUTION

3.1 LAWN PREPARATION

A. Newly Graded Subgrades: Loosen subgrade to a minimum depth of 4 inches. Remove stones larger than 2 inches in any dimension and sticks, roots, rubbish, and other extraneous matter and legally dispose of them off Owner's property.

B. Surface Preparation::
1. Loosen surface soil to a depth of at least of 6 inches. Apply soil amendments and fertilizers according to planting soil mix proportions and mix thoroughly into top 4 inches of soil. Till soil to a homogeneous mixture of fine texture.
2. Remove stones larger than 2 inches in any dimension and sticks, roots, trash, and other extraneous matter.
3. Legally dispose of waste material, including grass, vegetation, and turf, off Owner's property.

C. Finish Grading: Grade planting areas to a smooth, uniform surface plane with loose, uniformly fine texture. Grade to within plus or minus 1/2 inch of finish elevation. Roll and rake, remove ridges, and fill depressions to meet finish grades. Limit fine grading to areas that can be planted within 2 days.

D. Moisten prepared lawn areas before planting if soil is dry. Water thoroughly and allow surface to dry before planting. Do not create muddy soil.

E. Restore areas if eroded or otherwise disturbed after finish grading and before planting.

3.2 SEEDING

A. Rake seed lightly into top 1/8 inch of topsoil, roll lightly, and water with fine spray.

B. Protect all seeded areas by spreading straw mulch. Spread uniformly at a minimum rate of 2 tons/acre to form a continuous blanket 1-1/2 inches in loose depth over seeded areas. Spread by hand, blower, or other suitable equipment.

C. Hydroseeding New Lawns:
1. Mix specified seed, fertilizer and pulverized mulch in water, using equipment specifically designed for hydroseed application. Continue mixing until uniformly blended into homogenous slurry suitable for hydraulic application.
2. Apply slurry uniformly to all areas to be seeded. Rate of application as required to obtain specified seed sowing rate above.

3.3 SODDING

A. Sodding New Lawns:
1. Lay sod within 72 hours from time of stripping. Do not plant dormant sod or if ground is frozen.
2. Lay sod between March 1 and October 15 only unless soil conditions are favorable and written permission is obtained from the Engineer.
3. Lay sod to form a solid mass with tightly fitted joints. Butt ends and sides of sod strips; to not overlap. Stagger strips to offset joints in adjacent courses. Work from boards to avoid damage to subgrade or sod. Tamp or roll lightly to ensure contact with subgrade.

Work sifted soil into minor cracks between pieces of sod; remove excess to avoid smothering of adjacent grass. Lay sod on slopes with short dimension running up and down.

4. Anchor sod on slopes, 3:1 or greater and in drainage swales to prevent slippage, with 1 by 2 wood pegs driven flush with sod.
5. Saturate sod with fine water spray within two hours of planting. During first week, water daily or more frequently as necessary to maintain moist soil to a minimum depth of 1-1/2 inches below sod.
6. Two weeks after the sod is installed, top dress and thoroughly water it. Top dressing shall consist of the following:
   a. 1/2 to 1 pound: 38 percent urea formaldehyde per 1,000 square feet
   b. 20 pounds: 6-12-12 per 1,000 square feet
7. No equipment, material storage, construction traffic, etc., will be permitted on newly sodded areas.
8. Dispose of all surplus material off site.

3.4 CLEANUP AND PROTECTION

A. During landscape work, keep pavements clean and work area in an orderly condition.

B. Protect landscape work and materials from damage due to landscape operations, operations by other contractors and trades and trespassers. Maintain protection during installation and maintenance periods. Treat, repair or replace damaged landscape work as directed.

END OF SECTION 329221

This page intentionally left blank.

SECTION 330505.36 - VACUUM TESTING

PART 1 - GENERAL

1.1 SUMMARY

A. Section Includes: Vacuum testing of manholes.

1.2 UNIT PRICE - MEASUREMENT AND PAYMENT

A. Vacuum Testing:

1. Vacuum Testing is not a pay item. It shall be considered an integral part of the construction, and unit prices bid for items with which Vacuum Testing is connected shall be full compensation for this item and for all labor, materials, and equipment required to complete the item in accordance with the drawing and specifications

1.3 SUBMITTALS

A. Submit following items prior to start of testing:

1. Testing procedures.
2. List of test equipment.
3. Testing sequence schedule.
4. Provisions for disposal of flushing and test water.
5. Certification of test gage calibration.

B. Test and Evaluation Reports: Indicate results of manhole tests.

C. Qualifications Statement:

1. Qualifications for applicator.

1.4 QUALITY ASSURANCE

A. Perform Work according to ASTM C1244 standards.

B. Applicator: Company specializing in performing Work of this Section with three years' experience.

PART 2 - PRODUCTS

2.1 VACUUM TESTING

A. Equipment:

1. Vacuum pump.
2. Vacuum line.
3. Vacuum Tester Base:

   a. Compression band seal.
   b. Outlet port.

4. Shutoff valve.
5. Stopwatch.
6. Plugs.
7. Vacuum Gage: Calibrated to 0.1 in. Hg.

PART 3 - EXECUTION

3.1 EXAMINATION

A. Verify that manholes are ready for testing.

B. Verify that manholes are backfilled.

3.2 FIELD QUALITY CONTROL

A. Manhole Testing:

1. Repair both outside and inside of joint to ensure permanent seal.
2. Test manholes with manhole frame set in place.
3. Vacuum Testing:

   a. Comply with ASTM C1244 (C1244M).
   b. Plug pipe openings; securely brace plugs and pipe.
   c. Inflate compression band to create seal between vacuum base and structure.
   d. Connect vacuum pump to outlet port with valve open, then draw vacuum to 10 in. Hg.
   e. Close valve.
   f. Manhole Test Duration in Seconds: Perform vacuum test duration according to ASTM C1244.

   g. Record vacuum drop during test period.
   h. If vacuum drop is greater than 1 in. Hg during testing period, repair and retest manhole.

i. If vacuum drop of 1 in. Hg does not occur during test period, manhole is acceptable; discontinue testing.
j. If vacuum test fails to meet 1 in. Hg drop in specified time after repair, repair and retest manhole.

4. If unsatisfactory testing results are achieved, repair manhole and retest until result meets criteria.
5. Repair visible leaks regardless of quantity of leakage.

END OF SECTION 330505.36

This page intentionally left blank.

SECTION 330505.41 - AIR TESTING

PART 1 - GENERAL

1.1 SUMMARY

A. Section Includes: Low-pressure air testing of gravity sewer piping.

1.2 UNIT PRICE - MEASUREMENT AND PAYMENT

A. Air Testing:

1. Air Testing is not a pay item. It shall be considered an integral part of the construction, and unit prices bid for items with which Air Testing is connected shall be full compensation for this item and for all labor, materials, and equipment required to complete the item in accordance with the drawing and specifications

1.3 SUBMITTALS

A. Submit following items prior to start of testing:

1. Testing procedures.
2. List of test equipment.
3. Testing sequence schedule.
4. Provisions for disposal of flushing and test water.
5. Certification of test gage calibration.

B. Test and Evaluation Reports: Indicate results of piping tests.

C. Qualifications Statement:

1. Qualifications for applicator.

1.4 QUALITY ASSURANCE

A. Perform Work according to UNI-B-6 standards.

B. Applicator: Company specializing in performing Work of this Section with three years' experience.

PART 2 - PRODUCTS

2.1 AIR TESTING

A. Equipment:

1. Air compressor.
2. Air supply line.
3. Shutoff valves.
4. Pressure regulator.
5. Pressure relief valve.
6. Stopwatch.
7. Plugs.
8. Pressure Gage: Calibrated to 0.1 psi.

PART 3 - EXECUTION

3.1 EXAMINATION

A. Verify that piping is ready for testing.

B. Verify that trenches are backfilled.

3.2 PREPARATION

A. Section 017000 - Execution and Closeout Requirements: Requirements for preparation.

B. Lamping:

1. Lamp gravity piping after flushing and cleaning.
2. Perform lamping operation by shining light at one end of each pipe section between manholes.
3. Observe light at other end.
4. Pipe not installed with uniform line and grade will be rejected.
5. Remove and reinstall rejected pipe sections.
6. Clean and lamp until pipe section is installed to uniform line and grade.

C. Plugs:

1. Plug outlets, wye branches, and laterals.
2. Brace plugs to resist test pressures.

3.3 FIELD QUALITY CONTROL

A. Low-Pressure Air Testing: Perform air testing in accordance with UNI-B-6
1. Test each reach of gravity sewer piping between manholes.

2. Introduce air pressure slowly.
3. Record drop in pressure during testing period.
4. If piping fails, test reach of piping in incremental stages until leaks are isolated, repair leaks, and retest entire reach between manholes.
5. If unsatisfactory testing results are achieved, make necessary repairs and retest until result meets criteria.
6. Repair visible leaks regardless of quantity of leakage.

END OF SECTION 330505.41

This page intentionally left blank.

SECTION 330561 – CONCRETE MANHOLES

PART 1 - GENERAL

1.1 SUMMARY

A. Section Includes:

1. Modular precast concrete manholes and structures with tongue-and-groove joints and transition to cover frame, covers, anchorage, and accessories.
2. Masonry manhole and structure sections with masonry transition to cover frame, covers, anchorage, and accessories.
3. Doghouse manhole connections to existing sanitary sewer lines.
4. Bedding and cover materials.
5. Vertical adjustment of existing manholes and structures.

1.2 DEFINITIONS

A. Bedding: Specialized material placed under manhole prior to installation and subsequent backfill operations.

1.3 SUBMITTALS

A. Product Data: Manhole materials, manhole steps, manhole casting, concrete mix design, coal tar epoxy, manufacturer information for manhole covers, component construction, features, configuration, and dimensions.

B. Shop Drawings:

1. Structure locations and elevations.
2. Sizes and elevations of piping, and penetrations.
3. Precast concrete manholes, including frames and covers.

C. Manufacturer's Certificate: Products meet or exceed specified requirements.

D. Manufacturer Instructions: Installation requirements, including storage and handling procedures.

E. Source Quality-Control Submittals: Indicate results of factory tests and inspections.

F. Field Quality-Control Submittals: Indicate results of Contractor-furnished tests and inspections.

G. Qualifications Statement:

1. Qualifications for manufacturer.

1.4 CLOSEOUT SUBMITTALS

A. Project Record Documents: Record actual locations of manholes and connections, and record invert elevations.

1.5 QUALITY ASSURANCE

A. Perform Work according to ASTM C 478 standards.

1.6 DELIVERY, STORAGE, AND HANDLING

A. Storage:

1. Store materials according to manufacturer instructions.
2. Store precast concrete manholes and drainage structures to prevent damage to Owner's property or other public or private property.
3. Repair property damaged from materials storage.

B. Protection:

1. Protect materials from moisture and dust by storing in clean, dry location remote from construction operations areas.
2. Provide additional protection according to manufacturer instructions.

1.7 AMBIENT CONDITIONS

A. Cold Weather Requirements: Comply with ACI 530/530.1.

1.8 EXISTING CONDITIONS

A. Field Measurements:

1. Verify field measurements prior to fabrication.
2. Indicate field measurements on Shop Drawings.

PART 2 - PRODUCTS

2.1 CONCRETE MANHOLES

A. Normal-Traffic Precast Concrete Manholes: ASTM C 478, precast, reinforced concrete, of depth indicated, with provision for rubber gasketed joints.
1. Diameter: 48 inches minimum, unless otherwise indicated.
2. Ballast: Increase thickness of precast concrete sections or add concrete to base section, as required to prevent flotation.

3. Base Section: 6-inch minimum thickness for floor slab and 4-inch minimum thickness for walls and base riser section, and having base section with monolithic floor.
4. Riser Sections: 4-inch minimum thickness, and lengths to provide depth indicated.
5. Top Section: Concentric-cone type, unless eccentric-cone or flat-slab-top type is indicated. Top of cone of size that matches grade rings.
6. Gaskets: ASTM C 443, rubber.
7. Grade Rings: Include two or three reinforced-concrete rings, of 6- to 9-inch total thickness, that match 24-inch diameter frame and cover.
8. Steps: Polypropylene plastic with 3/8" steel reinforcing rod encapsulated. Include width that allows worker to place both feet on one step and is designed to prevent lateral slippage off step. Cast or anchor into base, riser, and top section sidewalls with steps at 12- to 16-inch intervals. Omit steps for manholes less than 36 inches deep.
9. Pipe Openings: Pre-cast at the proper alignment and elevation, or cored in the field. Saw-cut or chipped openings will not be allowed.
10. Pipe Connectors: ASTM C 923, resilient, of size required, for each pipe connecting to base section. Installed in pre-cast openings, as manufactured by Kor-N-Seal Co., or equivalent.
11. Drop Manholes: Provide drop manholes (Memphis Tees) where indicated and at all instances where the vertical drop through the manhole exceeds 2'-0".
12. Inverts: Inverts shall be precast by the manufacturer or poured with solid concrete in the field. Brick and mortar inverts are not allowed.
13. ALL MANHOLES SHALL BE MADE WITH XYPEX.

B. Manhole Frames and Covers:
1. ASTM A 536, Grade 60-40-18, ductile-iron castings designed for heavy-duty service, with machined bearing surfaces.
2. 305 pounds total weight, minimum.
3. 22" clear opening, minimum.
4. Include risers and adjusting rings as required for each installation.
5. Covers: Solid (no holes), City of Rome Clock Tower Logo with lettering "SEWER" cast into cover, 23 ½" diameter.
6. Manufacturer: East Jordan Iron Works Model V-1480, V-2480 (Water Tight), or pre-approved equivalent.

C. Manhole Frames and Bolt Down Covers:
1. ASTM A 536, Grade 60-40-18, ductile-iron castings designed for heavy-duty service, with machined bearing surfaces.
2. 305 pounds total weight, minimum.
3. 22" clear opening, minimum.
4. Include risers and adjusting rings as required for each installation.
5. Covers: Solid (no holes), City of Rome Clock Tower Logo with lettering "SEWER" cast into cover, 23 ½" diameter.
6. Manufacturer: East Jordan Iron Works Model 1310APT/1311ZPT Assembly or pre-approved equivalent

2.2 EXTERNAL MANHOLE SEALING SLEEVE

A. Description: All manhole joints and the connection between the grade rings to the frame and cover shall be wrapped in an external rubber sleeve to prevent inflow and infiltration.

B. Rubber sleeve shall be a single continuous 60 mil minimum EPDM seal, with width as required to seal the actual number of grade rings installed, but in no case less than 12".

C. Each seal shall have a minimum 2" x ¼" mastic strip on the top and bottom edge. Mastic shall be non-hardening butyl rubber sealant.

D. Manufacturers:
   1. Infi-Shield by Sealing Systems, Inc.
   2. Or approved equivalent.

2.3 CONCRETE

A. General: Cast-in-place concrete according to ACI 318, ACI 350R, and the following:
   1. Cement: ASTM C 150, Type II.
   2. Fine Aggregate: ASTM C 33, sand.
   3. Coarse Aggregate: ASTM C 33, crushed gravel.
   4. Water: Potable.

B. Portland Cement Design Mix: 4000 psi minimum, with 0.45 maximum water-cementitious materials ratio.
   1. Reinforcement Fabric: ASTM A 185, steel, welded wire fabric, plain.
   2. Reinforcement Bars: ASTM A 615/A 615M, Grade 60, deformed steel.

C. Structure Channels and Benches: Factory or field formed from concrete. Portland cement design mix, 4000 psi minimum, with 0.45 maximum water-cementitious materials ratio. Include channels and benches in manholes.
   1. Channels: Concrete invert, formed to same width as connected piping, with height of vertical sides to three-fourths of pipe diameter. Form curved channels with smooth, uniform radius and slope.
      a. Invert Slope: 1 percent through manhole.
   2. Benches: Concrete, sloped to drain into channel.
      a. Slope: 8 percent.

D. Ballast and Pipe Supports: Portland cement design mix, 3000 psi minimum, with 0.58 maximum water-cementitious materials ratio.
   1. Reinforcement Fabric: ASTM A 185, steel, welded wire fabric, plain.
   2. Reinforcement Bars: ASTM A 615/A 615M, Grade 60, deformed steel.

2.4 ACCESSORIES

A. Steps:

   1. Polypropylene plastic with 3/8" steel reinforcing rod encapsulated. Include width that allows worker to place both feet on one step and is designed to prevent lateral slippage off step. Cast or anchor into base, riser, and top section sidewalls with steps at 12- to 16-inch intervals. Omit steps for manholes less than 36 inches deep.

B. Foundation Slab:

   1. Cast-in-place concrete as specified in Section 033000 - Cast-in-Place Concrete

2. Top Surface: Level.

C. Strap Anchors:

1. Shape: Bent steel.
2. Size: As indicated.
3. Finish: Galvanized.

D. Joint Sealant: Comply with ASTM C990 (C990M).

E. Fasteners: Stainless steel; ASTM F593.

F. Geotextile Filter Fabric:

1. Description:

a. Non-biodegradable.
b. Woven.

2. Comply with AASHTO M288.

G. Concrete: As specified in Section 033000 - Cast-in-Place Concrete.

H. Grout: As specified in Section 033000 - Cast-in-Place Concrete.

I. Soil Backfill from Above Pipe to Finish Grade.

2.5 SOURCE QUALITY CONTROL

A. Provide shop inspection and testing of completed assembly.

B. Certificate of Compliance:

1. If manufacturer is approved by authorities having jurisdiction, submit certificate of compliance indicating Work performed at manufacturer's facility conforms to Contract Documents.
2. Specified shop tests are not required for Work performed by approved manufacturer.

PART 3 - EXECUTION

3.1 EXAMINATION

A. Verify that items provided by other Sections of Work are properly sized and located.

B. Verify that built-in items are in proper location and are ready for roughing into Work.

C. Verify that excavation base is ready to receive Work and excavations and that dimensions and elevations are as indicated.

3.2 PREPARATION

A. Mark each precast structure by indentation or waterproof paint showing date of manufacture, manufacturer, and identifying symbols and numbers as indicated for its intended use.

B. Coordinate placement of inlet and outlet pipe or duct sleeves as required by other Sections.

C. Do not install manholes and structures where Site conditions induce loads exceeding structural capacity of manholes or structures.

D. Inspect precast concrete manholes and structures immediately prior to placement in excavation to verify that they are internally clean and free from damage; remove and replace damaged units.

3.3 INSTALLATION

A. Conduct operations not to interfere with, interrupt, damage, destroy, or endanger integrity of surface structures or utilities in immediate or adjacent areas.

B. Correct over-excavation with coarse aggregate.

C. Remove large stones or other hard matter impeding consistent backfilling or compaction.

D. Protect manhole from damage or displacement while backfilling operation is in progress.

E. Excavating:

1. As specified in Section 312316 - Excavation and in indicated locations and depths.
2. Provide clearance around sidewalls of manhole or structure for construction operations.
3. If ground water is encountered, prevent accumulation of water in excavations;.
4. Where possibility exists of watertight manhole or structure becoming buoyant in flooded excavation, anchor manhole or structure to avoid flotation as approved by Architect/Engineer.

F. Base and Alignment:

1. Install manholes supported at proper grade and alignment on compacted crushed-stone bedding.
2. Grout base of shaft sections to achieve slope to exit piping, trowel smooth, and contour to form continuous drainage channel.
3. Form and place manhole or structure cylinders plumb and level, to correct dimensions and elevations.

G. Attachments:
1. Set cover frames and covers level to correct elevations without tipping.

H. Backfilling: As required

I. Coating
1. Xypex admixture shall be used in the manhole concrete.

J.

K. Precast Concrete Manholes:

1. Lift precast components at lifting points designated by manufacturer.
2. When lowering manholes into excavations and joining pipe to units, take precautions to ensure that interior of pipeline and structure remains clean.
3. Assembly:

    a. Assemble multisection manholes and structures by lowering each section into excavation.
    b. Install rubber gasket joints between precast sections according to manufacturer recommendations.
    c. Lower, set level, and firmly position base section before placing additional sections.

4. Remove foreign materials from joint surfaces and verify that sealing materials are placed properly.
5. Maintain alignment between sections by using guide devices affixed to lower section.
6. Joint sealing materials may be installed on Site or at manufacturer's plant.
7. Verify that installed manholes meet required alignment and grade.
8. Remove knockouts or cut structure to receive piping without creating openings larger than required to receive pipe; fill annular spaces with mortar.
9. Cut pipe flush with interior of structure.
10. Shape inverts through manhole as indicated.

L. Cast-in-Place Concrete Manholes:

1. Bear firmly and fully on compacted crushed stone bedding.
2. Place and cure concrete as specified in Section 033000 - Cast-in-Place Concrete.

M. Doghouse Manholes and Structures:

1. Stake out location and burial depth of existing sewer line in area of proposed manhole or structure.
2. Carefully excavate around existing sewer line to adequate depth for foundation slab installation.
3. Protect existing pipe from damage.
4. Cut out soft spots and replace with granular fill.
5. Bear firmly and fully on compacted crushed stone bedding.
6. Install precast concrete and/or Construct cast-in-place concrete manhole or structure around existing pipe according to applicable Paragraphs in this Section.
7. Grout pipe entrances as specified in Section 033000 - Cast-in-Place Concrete.
8. Block upstream flow at existing manhole or structure with expandable plug.
9. Use hydraulic saw to cut existing pipe at manhole or structure entrance and exit and along pipe length at a point halfway up OD on each side of pipe.
10. Bottom half of pipe is to remain as manhole flow channel.
11. Saw cut to smooth finish with top half of pipe flush with interior of manhole or structure.
12. Grout base of manhole or structure to achieve slope to manhole or structure channel as specified in Section 033000 - Cast-in-Place Concrete and trowel smooth.

N. Sanitary Manhole Drop Connections: As indicated.

O. Installation Standards: Install Work according to governing standards.

3.4 FIELD QUALITY CONTROL

A. Testing:
   1. Concrete Manhole Sections: As specified in Section 330505.36 - Vacuum Testing.

B. Equipment Acceptance: Adjust, repair, modify, or replace components failing to perform as specified and rerun tests.

3.5 ATTACHMENTS

A. None

END OF SECTION 330561

SECTION 333100 - SANITARY SEWERAGE PIPING

PART 1 - GENERAL

1.1 SUMMARY

A. Section Includes:

1. Sanitary sewerage piping.
2. Bedding and cover materials.

1.2 PERFORMANCE REQUIREMENTS

A. Gravity-Flow, Nonpressure-Piping Pressure Ratings: At least equal to system test pressure.

B. Force-Main Pressure Ratings: At least equal to system operating pressure, but not less than 200 psig.

1.3 SUBMITTALS

A. Product Data: Manufacturer information indicating pipe material to be used, pipe accessories, and all necessary appurtenances.

B. Manufacturer's Certificate: Products meet or exceed specified requirements.

C. Source Quality-Control Submittals: Indicate results of factory tests and inspections.

D. Field Quality-Control Submittals: Indicate results of Contractor-furnished tests and inspections.

E. Qualifications Statement:

1. Qualifications for manufacturer and installer.

1.4 CLOSEOUT SUBMITTALS

A. Project Record Documents: Record finished locations of pipe runs, connections, manholes, cleanouts, and invert elevations.

B. Identify and describe unexpected variations to subsoil conditions or discovery of uncharted utilities.

1.5 QUALITY ASSURANCE

A. Perform Work according to governing standards.

B. Manufacturer: Company specializing in manufacturing products specified in this Section with three years' experience.

C. Installer: Company specializing in performing Work of this Section with three years' experience.

D. Contractor or Subcontractor installing Residential Service lines shall have and provide a valid Plumbing License issued by the State of Georgia.

1.6 DELIVERY, STORAGE, AND HANDLING

A. Storage:

1. Store materials according to manufacturer instructions.
2. Store valves in shipping containers with labeling in place.

B. Protection:

1. Protect materials from moisture and dust by storing in clean, dry location remote from construction operations areas.
2. Block individual and stockpiled pipe lengths to prevent moving.
3. Provide additional protection according to manufacturer instructions.

1.7 EXISTING CONDITIONS

A. Field Measurements:

1. Verify field measurements prior to fabrication.
2. Indicate field measurements on Shop Drawings.

PART 2 - PRODUCTS

2.1 SANITARY SEWERAGE PIPING

A. Ductile-Iron Pipe: ASTM A 746, for push-on joints, size 4” to 64”, double thickness cement-lined, pressure class 200 minimum.
1. Standard-Pattern, Ductile-Iron Fittings: AWWA C110, ductile or gray iron, for push-on joints, cement-lined.
2. Compact-Pattern, Ductile-Iron Fittings: AWWA C153, for push-on joints, cement-lined.
3. Gaskets: AWWA C111, rubber.
4. Identification: All ductile iron sewer pipe shall have a green stripe painted on the top of the pipe. Field painting of the identification stripe is acceptable.
a. PVC Sewer Pipe and Fittings: According to the following:

B. Plastic Pipe:

1. Material: PVC Sewer Pipe and Fittings, 21” and Smaller.

a. Comply with ASTM D3034, SDR-26 minimum stiffness 115 psi @ 5% deflection
b. Smooth wall
c. 14' maximum joint length
d. Gasketed joints utilizing ASTM F 477, elastomeric seals and meeting AMTM D3212
e. Fittings manufactured specifically for use with heavy wall sewer pipe

C. PE, AWWA Pipe: AWWA C906, DR No. 11 (DIPS); with PE compound number required to give pressure rating not less than 200 psig.

1. PE, AWWA Fittings: AWWA C906, socket- or butt-fusion type, with DR number matching pipe and PE compound number required to give pressure rating not less than 200 psig

D. Vitrified Clay Pipe is not allowed.

E. Reinforced Concrete Sewer Pipe is not allowed.

2.2 MANHOLES

A. As specified in Section 330561 - Concrete Manholes.

B. As specified in Section 330562 – Manhole Rehabilitation Coating System.

2.3 CONCRETE PLACEMENT

A. Place cast-in-place concrete according to ACI 318 and ACI 350R.

2.4 FLEXIBLE COUPLINGS

A. Description:

1. Material: Resilient, chemical-resistant, elastomeric PVC.
2. Attachment: Two stainless-steel clamps, screws, and housings.

2.5 FLEXIBLE PIPE BOOTS FOR MANHOLE PIPE ENTRANCES

A. Description:
1. Comply with ASTM C923.
2. Attachment: Stainless-steel clamp and hardware.

2.6 MIXES

A. Grout: As specified.

2.7 ACCESSORIES

A. Pipe Markers: As specified in Section 330597 - Identification and Signage for Utilities.

2.8 SOURCE QUALITY CONTROL

A. Provide shop inspection and testing of pipe.

B. Certificate of Compliance:

1. If manufacturer is approved by authorities having jurisdiction, submit certificate of compliance indicating Work performed at manufacturer's facility conforms to Contract Documents.
2. Specified shop tests are not required for Work performed by approved manufacturer.

PART 3 - EXECUTION

3.1 EXAMINATION

A. Verify that excavation base is ready to receive Work of this Section.

B. Verify that excavations, dimensions, and elevations are as indicated.

3.2 PREPARATION

A. Correct over-excavation with coarse aggregate.

B. Remove large stones or other hard materials that could damage pipe or impede consistent backfilling or compaction.

C. Protect and support existing sewer lines, utilities, and appurtenances.

D. Utilities:

1. Maintain profiles of utilities.
2. Coordinate with other utilities to eliminate interference.
3. Notify Engineer if crossing conflicts occur.

3.3 INSTALLATION

A. Bedding:

1. Excavate pipe trench.
2. Place bedding material at trench bottom.
3. Level materials in continuous layer.

4. Maintain optimum moisture content of bedding material to attain required compaction density.

B. Piping:

1. Install pipe, fittings, and accessories according to ASTM D2321, and seal joints watertight.
2. Lay pipe to slope gradients as indicated.
3. Begin at downstream end of system and progress upstream.
4. Bedding: Install at sides and over top of pipe, to minimum compacted thickness of 6 inches.

C. Manholes:
1. As specified in Section 330561 - Concrete Manholes.
2. As specified in Section 330562 – Manhole Rehabilitation Coating System.

D. Backfilling:

1. Backfill around sides and to top of pipe with cover fill in minimum lifts of 6 inches.
2. Tamp fill in place, and compact.
3. Place and compact material immediately adjacent to pipes to avoid damage to pipe and prevent pipe misalignment.
4. Maintain optimum moisture content of bedding material as required to attain specified compaction density.

3.4 FIELD QUALITY CONTROL

A. Inspect interior of piping to determine whether line displacement or other damage has occurred. Inspect after approximately 24 inches of backfill is in place, and again at completion of Project.
1. Defects requiring correction include the following:
   a. Alignment: Less than full diameter of inside of pipe is visible between structures.
   b. Deflection: Flexible piping with deflection that prevents passage of ball or cylinder of size not less than 92.5 percent of piping diameter.
   c. Crushed, broken, cracked, or otherwise damaged piping.
   d. Infiltration: Water leakage into piping.
   e. Exfiltration: Water leakage from or around piping.
2. Replace defective piping using new materials, and repeat inspections until defects are within allowances specified.
3. Reinspect and repeat procedure until results are satisfactory.

B. Test new piping systems, and parts of existing systems that have been altered, extended, or repaired, for leaks and defects.
1. Do not enclose, cover, or put into service before inspection and approval.
2. Test completed piping systems according to authorities having jurisdiction.
3. Schedule tests and inspections with at least 24 hours' advance notice to Engineer.
4. Submit separate reports for each test.
5. Perform tests as follows:
   a. Sanitary Sewerage: Perform air test according to UNI-B-6.
   b. Force Mains: Perform test according to AWWA C600
      1) 150 psi at lowest point.

2) 0.11 gallons per hour per inch diameter per thousand feet.
3) Two hour minimum with 5+/- psi pressure difference.

6. Leaks and loss in test pressure constitute defects that must be repaired.
7. Replace leaking piping using new materials, and repeat testing until leakage is within allowances specified.

3.5 PROTECTION

A. Protect pipe and aggregate cover from damage or displacement until backfilling operation is in progress.

B. Cap open ends of piping during periods of Work stoppage.

3.6 ATTACHMENTS

A. None

END OF SECTION 333100

THE CITY OF
ROME, GEORGIA

WATER AND SEWER DIVISION

HORSELEG CREEK SANITARY SEWER PUMP STATION ADDITION

OWNER BID #-XXX-XX
PROJECT NUMBER 16120.04

APPENDIX "A"

THE CITY OF ROME, GEORGIA WATER AND SEWER DIVISION STANDARD WATER LINE SPECIFICATIONS

This page intentionally left blank.

STANDARD WATER LINE SPECIFICATIONS

CITY OF ROME, GEORGIA

EFFECTIVE DATE JUNE 23, 2009

TABLE OF CONTENTS

1.01 – Purpose 1-1
1.02 – General 1-1
1.03 – Construction Drawings 1-1
1.04 – Materials 1-2
1.05 – Handling Materials.....1-8
1.06 – Construction along Highways, Streets, and Roadways 1-8
1.07 – Clearing 1-9
1.08 – Excavation 1-9
1.09 – Existing Underground Utilities and Obstructions.....1-10
1.10 – Laying and Jointing Pipe and Fittings 1-11
1.11 – Connections to Existing Pipe Lines 1-12
1.12 – Thrust Restraint.....1-12
1.13 – Fire Hydrant Installation 1-12
1.14 – Service Line Installation 1-13
1.15 – Backfilling 1-13
1.16 – Removing and Replacing Pavement 1-14
1.17 – Boring and Tunneling 1-16
1.18 – Stream and Ditch Crossing 1-20
1.19 – Testing, Inspection, & Rejection of Work 1-21
1.20 – Disinfecting Pipe Lines.....1-22
1.21 – Erosion and Sedimentation Control 1-23
1.22 – Grassing 1-23
1.23 – Protection and Restoration of Work Area.....1-24

APPENDIX A - STANDARD DRAWINGS

Typical Fire Hydrant Assembly Detail A-1
Rome Standard Hose Coupling Detail A-2
Typical Gate Valve & Box Detail.....A-3
Typical Blocking Detail A-4
Repair of Roadway Cut Detail A-5
Typical Water Service Connection Detail (Single Family) A-6
Water Valve Witness Post Detail.....A-7
Valve Location Sketch & Sample Drawing.....A-8
Typical Concrete Valve Marker.....A-9
Typical Water Service Connection Detail (Duplex Lot) A-10

Automatic Flush Installation Standard Detail.....A-11
Fire Line Service & Domestic Meter Vault Detail A-12

APPENDIX B - GRASSING SPECIFICATIONS

WATER LINE SPECIFICATIONS

1.01 - PURPOSE: These Specifications describe products to be incorporated into the water lines and requirements for the installation and use of these items. The Contractor/Developer shall furnish all products and perform all labor necessary to fulfill the requirements of these Specifications. The word "Division" used herein shall mean the Water and Sewer Division of the City of Rome, Georgia.

1.02 - GENERAL: All contractors installing water lines to be accepted onto maintenance by the City of Rome shall possess a valid utility contractors license issued by the State of Georgia and shall provide proof thereof to the City of Rome prior to the commencement of any work. Supply all products and perform all work in accordance with applicable American Society for Testing and Material (ASTM), American Water Works Association (AWWA), American National Standards Institute (ANSI), or other recognized standards. Latest revisions of all standards are applicable. If requested by the Division, submit evidence that manufacturers have consistently produced products of satisfactory quality and performance for a period of at least two years. By reference, the "Rules for Safe Drinking Water", latest revision, as established by the Georgia Department of Natural Resources, Environmental Protection Division shall also apply as though incorporated into these Specifications. All land disturbing activities shall be in full compliance with the Manual for Erosion and Sediment Control in Georgia, latest revision, and Best Management Practices.

1.03 - CONSTRUCTION DRAWINGS: The term construction drawings shall mean drawings, prints, descriptive literature, test reports, samples, calculations, schedules, material lists, and information and items of similar meaning.

(a) Submittals Required: The Contractor/Developer shall furnish to the Division for review in accordance with the procedure outlined below, drawings and descriptive literature for all manufactured or fabricated products. Additional information such as special drawings, schedules, calculations and curves, shall be provided as specifically requested by the Division.

(b) Contractor/Developer's Review: The Contractor/Developer shall review and check drawings and submittals. He shall indicate his approval by initials and date. The Contractor/Developer shall furnish the Division with a minimum of three copies of all submittals. A transmittal form shall accompany each submittal or group of submittals.

(c) Division's Review: All submittals will be reviewed, stamped, and dated by the Division before they are returned to the Contractor/Developer.

Acceptable submittals will be approved in writing with one copy returned to the Contractor/Developer and the remaining copies retained by the Division.

Submittals requiring minor corrections before being acceptable will be so noted. Drawings must be resubmitted for review and approval prior to installation or use of products.

(d) Drawings For Construction: Drawings or other submittals not bearing the Division's approval notation shall not be issued to subcontractors or utilized for construction purposes. The Contractor/Developer shall maintain at the job site a complete set of construction drawings bearing the Division's approval.

(e) Valve Location Sketches: The location of all valves installed shall be accurately referenced to at least two permanent landmarks which will not be removed or disturbed during construction. The Contractor\Developer shall provide valve location sketches similar to the example shown in Appendix 'A' of these specifications to the Division.

(f) As-Constructed Survey: The Contractor/Developer shall provide the City of Rome with and as-constructed survey of all water system improvements. This survey shall show the horizontal location of all valves, meters, fire hydrants, water mains and conduits.

1.04 - MATERIALS: Furnish all pipe, fittings, valves, tapping sleeves and valves, hydrants, and all other materials required for completion of the work. Pipes and fittings must not contain more than 8.0% lead, and solders and flux must not contain more than 0.2% lead. Furnish materials in accordance with the following:

(a) Ductile Iron Pipe (DIP): Ductile iron pipe shall conform to AWWA C151 and shall be a minimum of Class 50. All ductile iron pipe 20-inch diameter and smaller shall have a rated working pressure of 350 psi. Pipes larger than 20-inch diameter shall have a rated working pressure of 300 psi. Sizes will be as shown on the Drawings with the minimum allowable size being 8 inches. Pipe and fittings shall be cement lined in accordance with AWWA C104. Fittings shall conform to AWWA C110 with rated working pressure of 250 psi. Pipe shall be furnished with a bituminous outside coating.

Joints shall be push-on type for pipe and standard mechanical or flanged joints for fittings. Push-on and mechanical joints shall conform to AWWA C111. Restrained joint pipe (RJP) shall be either the bolted joint type or modified push-on type with joint restraint using ductile iron components. Restrained joint pipe on piers shall have bolted joints and shall be specifically designed for clear spans of at least 20 feet. Restrained joint pipe where required shall be American Zinc Coated.

Provide the appropriate gaskets for mechanical or flange joints. Gaskets for flange joints shall be made of 1/8-inch thick cloth reinforced rubber; gaskets may be ring type or full-face type.

Provide the necessary bolts for mechanical or flange connections. Bolts for flange connections shall be stainless steel with American Regular unfinished square or hexagon heads. Nuts shall be stainless steel with American Standard Regular hexagonal dimensions, all as specified in ANSI B 17.2. All bolts and all nuts shall be threaded in accordance with ANSI B 1.1, Coarse Thread Series, Class 2A and 2B fit.

All pipes shall be furnished in lengths of at least 18 feet. Acceptance will be in the basis of the Division's inspection and the manufacturer's written certification that the pipe was manufactured and tested in accordance with the applicable standards.

All fittings shall be of cast or ductile iron meeting the requirements of AWWA C110 with rated working pressure of 250 psi. Fittings shall be cement lined in accordance with AWWA C104.

Fittings shall be seal coated with a fusion bonded epoxy in accordance with ANSI/AWWA C-116/A21.16. Tees at fire hydrants shall be approved anchor tees. (DOMESTIC FITTINGS ONLY)

(b) Polyvinyl Chloride Pipe (PVC): When approved for use by the Division, PVC pipe shall have belled ends for push-on type jointing with elastomeric gasket seals and shall conform to AWWA C900, for cast-iron pipe equivalent OD's. The pipe shall have a Dimension Ratio (SDR) of 18 and shall be capable of withstanding a working pressure of 250 psi.

Pipe shall be supplied in lengths of at least 20 feet.

All fittings shall be of cast or ductile iron meeting the requirements of AWWA C110 with rated working pressure of 250 psi. Fittings shall be cement lined in accordance with AWWA C104.

Fittings shall be seal coated with a fusion bonded epoxy in accordance with ANSI/AWWA C-116/A21.16. Tees at fire hydrants shall be approved anchor tees. (DOMESTIC FITTINGS ONLY)

A detectable wire trace or detection tape shall be installed over all PVC water mains. Wire trace shall be copper strand Type 12-19, MTW, THHN, or THWN. Detection tape shall be detectable Mylar encased aluminum foil marking tape and shall be installed 1' above the top of pipe. Tape will be blue in color, at least 2-inches wide, and shall bear the printed identification "Caution: Water Line Buried Below". Detection tape shall be equal to Blackburn Mfg. Co. detectable underground warning tape.

Acceptance will be on the basis of the Division's inspection and the manufacturer's written certification that the pipe was manufactured and tested in accordance with the applicable standards. All plastic water pipes and service lines must bear the National Sanitation Foundation (NSF) seal of approval for potable water use.

(c) Gate Valves (GV): Gate valves with diameters 4 inches and larger shall be resilient seat, wedge-type conforming to the requirements of AWWA C509, and with geared operators, where required. All valves shall have a minimum rated working pressure of 250 psi.

Valves shall have a smooth, full diameter waterway with no recesses to trap debris or obstruct flow.

Valve ends shall be mechanical joint type with set screw type retainer glands except where flanged ends are required.

Valves shall open left and shall have o-ring type stem seals. Valve shall be designed so that upper o-ring stem seals can be replaced while the valve is fully open and under pressure.

Buried valves shall be equipped with valve boxes as shown in Appendix A. Provide extension stem where required. Bolts for extension stems shall be all stainless steel.

Valves located outside of roadway right of way shall be marked with a witness post as shown in Appendix A.

Valves located within the right of way shall be marked with a concrete valve marker as shown in Appendix A.

Valves, including geared valves, shall be non-rising stem type.

Gate valves shall be manufactured by American Ductile Iron Pipe, Mueller, or Griffin.
(d) Butterfly Valves: All butterfly valves shall be tight-closing rubber seated type. Valves shall close tight at the rated pressures with flow in either direction. Valve discs shall rotate 90 degrees from the fully open to fully shut position and shall meet the requirements of AWWA C504.

Valve ends shall be mechanical joint type with set screw type retainer glands except where flanged ends are required.

Valve operators shall be designed to hold the valve in any intermediate position without creeping or fluttering.

Manual valve operators shall be of the worm gear or traveling nut type, and shall be fully enclosed. Units shall be fully gasketed and grease packed.

Buried valves shall be furnished with ground level valve position indicators.

Valves shall open left.

(e) Backflow Preventers: All backflow prevention shall be installed to be in full compliance with the City of Rome Cross Connection Protection Plan. This plan is available through the Division. All backflow preventers shall be installed as close as possible to the water supply. All development shall be classified as on of three risk groups. Section 3 of the Cross Connection Protection Plan provides examples and basic descriptions of each Risk Group. The classification of a development will relate to potential risks, dependent upon internal processes, rather than the general category of the business or industry. The Director of the City of Rome Water Department shall make this determination.

(1) Backflow preventers for those developments classified as Risk Group I shall be the reduced pressure type providing protection during the emergency conditions of either back-siphonage or backpressure or a combination of both. Backflow preventers shall be certified by a nationally recognized testing laboratory as conforming to current requirements of ASSE 1013, AWWA C506, or USC-FCCC. The installation shall meet all applicable State and local codes.

Sizes 3/4-inch through 2-inch shall have bronze bodies with threaded connections and bronze union on either side of the device.

Sizes 2-1/2 inch and larger shall be bronze or iron bodied with corrosion resisting moving parts and trim and flange connections.

The device shall be equipped with three leak-proof test cocks. A fixed air gap, or funnel, shall be installed at the relief port. A drain line shall be piped from the discharge side of the air gap and shall be supported independently from the device.

An auxiliary check valve and strainer shall be installed upstream of the device. Gate valves shall be installed upstream and downstream of the device.

Backflow preventers shall be manufactured by Watts (no. 909 Series), Hersey, or Conbraco.

All reduced pressure zone backflow preventers shall be installed above grade.

(2) Backflow preventers for those developments classified in Risk Groups II and III shall be of the dual check valve type providing protection during the emergency conditions of either back-siphonage or backpressure or a combination of both. Backflow preventers shall be certified by a nationally recognized testing laboratory as conforming to current requirements of ASSE 1024 and CSA B64.6. The installation shall meet all applicable State and local codes.

The device shall be equipped with three test ports that allow testing while the valve is in line.

Backflow preventers shall be manufactured by Conbraco (Series 40-300), Watts, Hersey, or equal.

(3) Backflow preventers used on fire protection systems shall of the double check detector type. Fire protection system backflow preventers shall be installed in accordance with the American Water Works Association (AWWA) Guidelines on Fire Prevention Installations.

Backflow preventers shall be manufactured by Watts (Series 770DCDA), Hersey, or Conbraco.

(f) Corporation Stops: Corporation stops shall be ground key type; shall be made of bronze conforming to ASTM B 61 or B 62; and shall be suitable for the working pressure of the system. Ends shall be suitable for solder-joint, flanged lead joint or flared tube compression type joint. Threaded ends for inlet and outlet of corporation stops shall conform to AWWA C 800; coupling not for connection to flared copper tubing shall conform to ANSI b16.26.

(g) Valve Boxes (VB): All gate valves shall be equipped with valve boxes. Valve boxes shall be heavy roadway type. The valve boxes shall be cast iron two-piece slip or screw type with drop covers. The valve boxes shall be adjustable to 6 inches up or down from the nominal required cover over the pipe. Typical valve box details are included in the Appendix.

(h) Valve/Backflow Preventer Pits: All valve assemblies and backflow preventers installed underground shall be installed in a vault. The valve pit shall be sized and shall include adequate means for replacement or maintenance to components. Designs for all valve pits shall be approved by the Division.

(i) Meter Boxes: All new service meters, curb stops, and backflow preventers shall be installed inside a meter box. Meter boxes shall be sized according to the size of the components used. All meter boxes for 2" diameter and larger meters must be approved by the Division.

Meter boxes installed outside of paved areas and driveways shall be constructed of High Density Polyethylene (HDPE) and shall have a cast iron lid. These boxes shall be manufactured by D.F.W., Carson-Brooks, or equal.

All meter boxes installed in paved areas or driveways shall be constructed of all cast iron. These boxes shall be manufactured by Opelika, Higgins or equal.

(j) Tapping Sleeves and Valves (TS&V): Tapping sleeves when approved for use by the Division shall be of the splitsleeves, mechanical joint type. Valves shall be gate valves furnished in accordance with the specifications shown above, with flanged connection to the tapping sleeve and mechanical joint connection to the branch pipe. The branch pipe shall have set-screw retainer glands. The necessary bolts, glands, and gaskets shall be furnished.

(k) Repair Clamps: All repair clamps and associated nuts and bolts shall be all stainless steel. No repair clamps are permitted on new lines.

(l) Fire Hydrants (FH): All fire hydrants shall conform to the requirements of AWWA C502 for 250-psi working pressure. Hydrants shall be the compression type, closing with line pressure. Hydrants serving commercial or industrial areas shall have a valve opening not less than 4-1/2 inches and shall open left. Hydrants serving rural and residential areas shall have a valve opening not less than 4-1/2 inches and shall open left.

In the event of a traffic accident, the hydrant barrel shall break away from the standpipe at a point above grade and in a manner which will prevent damage to the barrel and stem, preclude opening of the valve, and permit rapid and inexpensive restoration without digging or cutting off the water.

The means for attaching the barrel to the standpipe shall permit facing the hydrant a minimum of eight different directions.

Hydrants shall be fully bronze mounted with all working parts of bronze. Valve seat ring shall be bronze and shall screw into a bronze retainer.

All working parts, including the seat ring shall be removable through the top without disturbing the barrel of the hydrant.

The operating nut shall be 5-sided with a 7/8-inch face. The operating threads shall be totally enclosed in an operating chamber separated from the hydrant barrel by a rubber o-ring stem seal and lubricated by a grease or oil reservoir. A stop nut shall be positioned in the top operating mechanism so that the valve cannot contact the bottom of the shoe when fully open.

Hydrant shall be a non-freezing design and provided with a simple, positive, and automatic drain, which shall be fully closed whenever the main valve is opened.

Hose and pumper connections shall be breech-locked, pinned, and then caulked with lead; or threaded and pinned, to seal them permanently into the hydrant barrel. Each hydrant shall have two 2-1/2 inch hose connections with Rome Standard thread connections, as shown in the Appendix, and one 4-inch pumper connection with National Standard thread connection. Provide each connection with a cap and chain.

Hydrants shall be furnished with a mechanical joint shoe connection to the spigot of the 6-inch hydrant lead. Minimum depth of bury shall be 3.5 feet with the "bury line" at ground level. Provide extension section where necessary for vertical installation and in accordance with manufacturer's recommendations.

All outside surfaces of the barrel above grade and the bonnet shall be painted OSHA Safety Yellow (7-757) as manufactured by Gillman Industries.

Hydrants shall be furnished with flow charts showing flow in gallons per minute versus friction loss.

Hydrants shall be Mueller Centurion.

1.05 - HANDLING MATERIALS:

(a) Unloading: Furnish equipment and facilities for unloading, handling, distributing and storing pipe, fittings, valves, and accessories. Make equipment available at all times for use in unloading. Do not drop or dump materials. Any materials dropped or dumped will be subject to rejection without additional justification.

(b) Handling: Handle pipe, fittings, valves and accessories carefully to prevent shock or damage. Handle pipe by rolling on skids, forklift, or front loader. Do not use material damaged in handling.

(c) Distribution: Distribute and place pipe and materials to not interfere with traffic. Do not string pipe more than 1,000 feet beyond the area where pipe is being laid. Do not obstruct drainage ditches.

(d) Storage: Store all pipe which cannot be distributed along the route. Make arrangements for the use of suitable storage areas.

1.06 - CONSTRUCTION ALONG HIGHWAYS, STREETS, AND ROADWAYS: Install pipe lines and accessories along highways, streets and roadways in accordance with the applicable regulations and permits of the City of Rome, Floyd County and/or the Department of Transportation with reference to construction operations, safety, traffic control, road maintenance and repair. All signage, barricades, and other traffic controls shall be installed in accordance with the Manual on Uniform Traffic Control Devices (MUTCD) latest revision.

(a) Protection of Traffic: Provide and maintain suitable signs, barricades and lights for protection of traffic. Replace all highway signs removed for construction as soon as possible. Do not close or block any highway, street, or roadway without first obtaining permission from the proper authorities.

Provide flagmen to direct and expedite the flow of traffic. All flagmen must be certified by the Georgia Department of Transportation.

(b) Construction Operations: Perform all work along highways, streets and roadways to least interfere with traffic.

(1) Stripping: Where the pipe line is laid along road shoulders, strip and stockpile all sod, topsoil and other material suitable for shoulder restoration.

(2) Trenching, Laying and Backfilling: Do not open the trench any further ahead of pipe laying operations than is necessary. Backfill and remove excess material immediately behind laying operations. Complete excavation and backfill for any portion of the trench in the same day.

(3) Shaping: Reshape damaged slopes, side ditches, and ditch lines immediately after completing backfilling operation. Replace topsoil, sod and any other materials removed from shoulders.

(c) Excavated Materials: Do not place excavated material along highways, streets and roadways in a manner, which obstructs traffic. Sweep all scattered excavated material off the pavement.

(d) Drainage Structures: Keep all side ditches, culverts, cross drains, and other drainage structures clear of excavated material and free to drain at all times.

(e) Maintaining Highways, Streets, Roadways and Driveways: Maintain streets, highways, and roadways in suitable condition for movement of traffic until completion and final acceptance of the work. Use steel running plate to maintain traffic until pavement replacement is completed.

Repair all driveways that are cut or damaged immediately. Maintain them in a suitable condition for use until completion and final acceptance of the work.

1.07 - CLEARING: Where limits of clearing are shown on the Drawings, all trees, growth, debris, stumps and other objectionable matter shall be removed before trenching. Clearing of the construction easement is permitted with special care taken to adhere to the requirements of Sections 21, 22 and 23 of these specifications.

1.08 - EXCAVATION: Excavate all materials encountered, including rock, and dispose of excess excavated material not required for backfilling. Perform all excavation in accordance with applicable local, state, and federal regulations, including those authorized by the Occupational Safety and Health Act (OSHA), as amended.

(a) Depth of Trenches: Excavate trenches to provide a minimum cover of 42-inches. Within the right-of-way of highways, streets, or roadways, excavate to place the top of the pipe a minimum of four feet below the nearest pavement edge.

(b) Width of Trenches: Excavate trenches wide enough to allow proper installation of pipe, fittings, and other materials, and not less than 12 inches clear of the outside barrel of the pipe on any side at any point.

(c) Bell Holes: At each joint, excavate bell holes of ample depth and width to permit the joint to be made properly and to relieve pipe bell of any load.

(d) Earth Excavation: Excavate and prepare the trench bottom to support the pipe uniformly throughout its length.

For ductile iron pipe, the trench shall meet all requirements of Standard Laying Condition Type 2 in accordance with AWWA C151.

If the trench is excavated to excessive width or depth, provide crushed stone meeting the requirements of Georgia DOT Specification 800.01 for No. 57 stone to achieve Standard Laying Condition Type 4 in accordance with AWWA C151.

(e) Rock Excavation:

(1) Definition of Rock: Any material which cannot be excavated with a backhoe and occupying an original volume of at least one-half cubic yard.

(2) Excavation: Where rock is encountered, excavate to the minimum depth and width, which will provide 6 inches clearance beyond the outside diameter of the pipe bell.

(3) Blasting: Blasting operations shall be conducted in strict accordance with all applicable ordinances and regulations. All exposed structures shall be carefully protected from the effects of blast and all blasts shall be covered with heavy timbers or other suitable material. The Contractor shall limit amounts of explosives and timing of blasts to minimize noise and concussion and to prevent damage to existing structures, pavements and utilities. The blasting shall be done only by experienced men. Damages shall be promptly repaired by the Contractor

at his own expense. No blasting will be permitted adjacent to existing buildings and structures. Rock at those locations shall be removed with jack hammers and bull-points. If rock is encountered that requires removal by blasting the Contractor shall retain and employ a qualified blasting consulting Engineer, approved by the owner, to supervise the work. The Blasting Engineer's duties shall be to advise the blaster of hole spacing and loading and to make seismic and concussion measurements. The Contractor shall cooperate with the Blasting Engineer by uncovering and exposing pipe and structures for instrument mounting. The contractor shall also advise the Owner when each shot is ready and how it is loaded. No loaded holes shall be left unattended at any time for any reason. All blasting shall be done during daylight hours.

(1) Blasting and Ordinances: All blasting operations shall be conducted in strict accordance with existing ordinances and regulations, and shall be done only with the Blasting ENGINEER'S APPROVAL AND UNDER ENGINEER'S SUPERVISION.

(2) Protection of Surroundings: All exposed structures shall be protected from the effects of blasts and all blasts shall be covered with blasting mats, dirt, heavy timbers, or other suitable material. They shall be restricted to the extent that no appreciable shock will be transmitted to existing structures, pipe lines, sewers, or 312333-5 Trench Excavation and Backfill other public or private facilities. The blasting shall be done by experienced personnel. Any damage done shall be promptly repaired by the Contractor at the Contractor's expense.

(3) Storage of Blasting Supplies: All blasting supplies shall be stored in a magazine which complies with all Local, State, and Federal Laws, and a watchman shall be stationed at all times at the place of storage. In no case shall caps or other exploders be kept at the place where dynamite or other explosives are kept.

(4) Delay of Shots: All shots shall be delayed so as to minimize ground vibrations with a maximum peak particle velocity, as measured to the nearest structure (embankment, pipes, etc.) not to exceed 2 inches per second. The overpressure noise or concussion shall be minimized and stemming and matting shall be used to prevent over pressure in excess of 120 db. Precautions shall be taken to minimize flying rock and sufficient matting used to prevent rocks from striking any person or structure.

(5) Vibration Recording instruments: Vibration recording instruments shall be used on all shots. These shall be of type which records on direct reading tape the three (3) components of velocity. The analysis of these recordings is to be signed by a Registered Professional Engineer in Georgia. Blasting is not to be conducted which will produce a Scaled Distance less than previously recorded for at least three (3) different shots deemed to be safe. The scaled distance is to be determined by the distance from the shot to the nearest structure subject to potential damage from ground vibration.

(6) Overpressure: (Concussion) Overpressure is to be recorded on direct recording tape, preferable on the same recording as the vibration. The instrument used for measuring concussion shall be the type specifically designed for impact-type overpressure from blasting.

(7) Record of Shots: The blaster is to maintain an accurate log of each shot, listing as a minimum the following: date, time, weather conditions including temperature

and humidity, station number, manufacture and type of explosive, method of detonation, total weight of explosive per shot, number of delays, number of holes, hole depth, maximum weight of explosives per delay, amount of explosives per hole number, amount of stemming, type and amount of blast matting, and a sketch of the hole pattern with hole number for each shot.

(4) Removal of Rock: Do not use excavated rock as backfill material. Dispose of rock, which is surplus or not suitable for use as rip rap.

(f) Creek and Channel Crossings: When crossing creeks, channels or other surface waters, excavate the trench to provide a minimum cover of two feet. Pipe shall be ductile iron restrained joint pipe and shall be encased in concrete. River crossings must be approved by the City of Rome in addition to any other federal, state, and local requirements.

1.09 - EXISTING UNDERGROUND UTILITIES AND OBSTRUCTIONS: It is the responsibility of the Contractor/Developer to locate all existing utilities along the path of his construction and to properly notify the Utilities Protection Center. Drawings shall indicate underground utilities or obstructions that are known to exist. Where these or unforeseen underground utilities are encountered, the location and alignment of the water main may be changed, upon written approval of the Division, to avoid interference.

A horizontal separation of at least 10 feet must be maintained between the water main and existing or proposed sewers. When water mains cross sewers, a minimum vertical separation of 18 inches must be provided between the two (2) pipes (measured edge to edge). At crossings, one full length of water pipe must be located so that both joints are as far from the sewer as possible.

1.10 - LAYING AND JOINTING PIPE AND FITTINGS: Lay all pipe and fittings to accurately conform to the lines and grades approved by the Division as follows:

(a) Handling: Use suitable tools and equipment to handle and lay pipe. Prevent damage to the pipe and the cement lining. Examine all pipe carefully for cracks and other defects as it is laid. Do not lay pipe or other materials, which are known to be defective.

Lower pipe, fittings, valves, and accessories into the trench by suitable means. Do not drop or dump pipe or accessories into the trench.

Clean pipe and fittings thoroughly before laying. Keep the pipe line clean until final acceptance.

If any pipe or other material is discovered to be defective or damaged after being laid, remove and replace it.

(b) Alignment and Gradient: Lay pipe straight in alignment and gradient or follow true curves as nearly as practicable. Do not deflect any joint more than 2/3 the maximum deflection recommended by the manufacturer.

Maintain a transit and accessories on the job to lay out angles and ensure that deflection allowances are not exceeded.

(c) Expediting of Work: Excavate, lay the pipe and backfill as closely together as possible. Do not leave unjointed pipe in the trench overnight. Backfill and compact the trench as soon as possible after laying and jointing is completed. Plug the exposed end of the installed pipe each day at the close of work and at all other times when work is not in progress. If necessary to backfill over the end of an uncompleted pipe, close the end with a mechanical joint plug.

(d) Laying Pipe in Trenches: Lay the pipe with solid bearing throughout its length.

(1) Earth Trenches: Grade the bottom of the trench to a true line. Lay the pipe in clean bedding material, free of rock, organics, and other unsuitable materials.

(2) Rock Trenches: Bed the pipe in at least six inches of clay or granular bedding material. Backfill with the same material to at least two feet above the pipe.

(3) Wet Trenches: Do not lay pipe in water. Provide dewatering equipment to maintain a ground water level below the bottom of the pipe while the pipe is being laid.

(e) Push-On Type Joints: Push-on type joints shall be made in accordance with the manufacturer's recommendations.

(f) Mechanical Joints: Make mechanical joints in accordance with the manufacturer's recommendations.

(g) Flange Joints: Make flange joints in accordance with the manufacturer's recommendations.

(h) Cutting: Cut ductile iron pipe using an abrasive wheel saw. Cut PVC pipe using a suitable saw; remove all burrs and smooth the end before jointing.

1.11 - CONNECTIONS TO EXISTING PIPE LINES: Before laying pipe, the Contractor/Developer shall locate the points of connection to existing pipe lines and uncover as necessary for the Division to confirm the nature of the connection to be made. The Division shall furnish materials and make the connection to all existing pipe lines unless otherwise directed. The Contractor/Developer will be charged with a connection fee to cover the expense of the Division.

1.12 - THRUST RESTRAINT: Provide restraint at all points where hydraulic thrust may develop.

(a) Retainer Glands: Install retainer glands on fire hydrants and all associated fittings, valves, and related piping. Retainer glands shall be equal to ACIPCO A 90857.

(b) Concrete Blocking: Provide concrete blocking for all other bends, tees, valves, and other points where thrust may develop.

Concrete shall have a compressive strength of not less than 3000 psi, with not less than 5.5 bags of cement per cubic yard and a slump between 3 and 5 inches. For job mixed concrete, submit the concrete mix design for approval by the Division. Ready-mixed concrete shall be mixed and transported in accordance with ASTM C 94. Reinforcing steel shall conform to the requirements of ASTM A 615, grade 40.

Form and pour concrete blocking at fittings as shown on the Typical Blocking Detail in Appendix A and as directed by the Division. Pour blocking against undisturbed earth. Increase dimensions when required by over excavation.

1.13 – FIRE HYDRANT INSTALLATION: Fire hydrants shall be installed at the locations indicated on the approved Plans and in accordance with the standard detail provided in Appendix 'A' of these Specifications.

All connections shall be fully restrained using rod restraints or mechanical joint glands in all couplings and fittings between the main to the hydrant.

Extension sections shall be used to adjust the elevation of the hydrant barrel so that the breakaway joint is at finish grade.

1.14 – SERVICE LINE INSTALLATION: Service lines shall be installed in accordance with the standard detail provided in Appendix 'A' of these specifications. All service line components shall be brass or copper.

All service lines shall be buried a minimum of 18" below finish grade. Grade of service line shall be adjusted at the meter box to insure that service line passes through notches in meter box. Service line installation shall extend a minimum of 6" beyond the meter box.

1.15 - BACKFILLING: Backfill and compact to prevent settlement and displacement of the pipe.

(a) Material: Trenches may be backfilled with suitable soil material, granular material or crushed stone. Do not use rock excavated from trenches in the backfill. If necessary, furnish suitable material to backfill the trench.

(1) Suitable soil materials shall be those defined as suitable by the Unified Soil Classification System (USCS) in ASTM D 2487. This shall include materials outline in Soil Class II, III, and IV and in general include inorganic sands, silts and clays.

(2) Unsuitable soil material shall be those defined as unsuitable by the Unified Soil Classification System (USCS) in ASTM D 2487. This shall include materials outlined in Soil Class V and in general include organic silts and clays, peat, muck or other highly organic soils.

(3) Granular Material, when used for bedding or backfilling of trenches, shall consist of a granular soil, sand, crushed stone, or mixture of these, all of which pass a 3/4-inch sieve, 80% of which pass a 3/8-inch sieve, and not more than 12% pass a No. 200 sieve. Material shall be free of organic matter and debris.

(4) Crushed Stone, when used for bedding or backfill of trenches, shall consist of sound, durable “crusher-run” rock, all of which passes a 2-inch sieve. Material shall be free of organic matter and debris.

(b) Backfill: Place backfill material in the bottom of the trench and up to two feet above the pipe in 6-inch layers. Compact with two hand operated air hammers with tamping feet, one on each side of the pipe, operated simultaneously.

Backfill above shall be compacted as follows:

(1) In 6-inch layers, if using light power tamping equipment, such as a "Wacker,"

(2) In two foot layers, if using heavy tamping equipment, such as vibratory "Ramax",

(c) Backfill Under Roads: Backfill underlying pavement and backfill under dirt and gravel roads shall be compacted to 95% of the maximum dry density as determined by the Standard Proctor Compaction Test (ASTM D 698).

(d) Settlement: If trenches settle, refill and grade the surface to conform to adjacent surfaces.

(e) Wire Trace: Bury detectable wire trace immediately above PVC pipe. Secure wire to pipe at fittings or at any change in direction or deflection. Take care not to damage wire insulation.

1.16 - REMOVING AND REPLACING PAVEMENT:

(a) Removing Pavement: Remove existing pavement as necessary for installing the pipe line and appurtenances.

(1) Marking: Before removing any pavement, mark the pavement neatly paralleling pipe lines and existing street lines. Space the marks the width of the trench.

(2) Breaking: Break asphalt pavement along the marks using jack hammers or other suitable tools. Break concrete pavement along the marks by use of jackhammers or by scoring with a rotary saw and breaking below the score by the use of jackhammers or other suitable tools.

(3) Machine Pulling: Do not pull pavement with machines until completely broken and separated from pavement to remain.

(4) Damage to Adjacent Pavement: Do not disturb or damage the adjacent pavement. If the adjacent pavement is disturbed or damaged, remove and replace the damaged pavement.

(5) Sidewalk: Remove and replace sidewalks for their full width. Replace sidewalk to the nearest construction joint beyond damaged areas.

(6) Curbs: Remove and replace or tunnel under any curb encountered.

(b) Replacing Pavement: Upon completion of backfilling and consolidation of the backfill, arrange to have the compaction tested by an independent testing laboratory approved by the Division. After compaction testing has been satisfactorily completed, replace all pavements, sidewalks and curbs removed.

(1) Materials: Place materials for pavement replacement to dimensions shown on the Drawings. Typical replacement details are included in Appendix A.

(aa) Graded Aggregate Sub-Base: Furnish graded aggregate sub-base in two sizes of such gradation that when combined in approximately equal quantities, the resulting mixture is well graded from coarse to fine, meeting the gradation requirements of Section 816 of the Georgia Department of Transportation Standard Specifications.

(bb) Black Base: The base for all paved roadways shall conform to the requirements of the Georgia Department of Transportation Specifications for the Black Base (Hot Mix). Apply and compact the base in two courses by asphalt spreader equipment of design and operation approved by the Division. After compaction, the black base shall be smooth and true to established profiles and sections.

(cc) Surface Course: The surface course for all pavement, including paint or tack coat when required by the Division, shall conform to the requirements of the Georgia Department of Transportation Specifications for Asphaltic Concrete, Section 400, Type "E" (12.5 mm). Apply and compact the surface course in a manner approved by the Division. Immediately correct any high, low or defective areas by cutting out the course, replacing with fresh hot mix, and immediately compacting to conform and thoroughly bond to the surrounding area.

(dd) Concrete: Provide concrete and reinforcing for concrete pavement in accordance with the requirements of the Georgia Department of Transportation Specifications for Portland Concrete Pavement, Section 430.

(2) Supervision and Approval: Pavement restoration shall meet the requirements of the regulatory agency responsible for the pavement. Obtain agency approval of pavement restorations before requesting final inspection.

Obtain the Division's approval for restoration of pavement such as private roads and drives.

Complete pavement restoration as soon as possible after backfilling

(3) Replacement: Prior to replacing pavement, make a final cut in concrete pavement nine inches back from the edge of damaged pavement. Make the cut

using a rotary saw. Remove asphalt pavement nine inches back form the edge of damaged pavement using jack hammers or other suitable tools.

Replace all street and roadway pavement as shown on the Drawings. Replace driveways, sidewalks, and curbs with the same material and to the same dimensions as existing.

(4) Failure of Pavement: Should any pavement restoration or repairs fail or settle within 12 months of completion, promptly restore or repair defects.

1.17 - BORING AND TUNNELING: Furnish and install pipe casing or tunnel and install the pipe line therein in accordance with the Drawings and the following specifications:

(a) General: Where groundwater is encountered, operate well points of drainage systems in the vicinity of the casing or tunnel construction to prevent the accumulation of flood water in the casing or tunnel and to maintain the ground water table below the casing or tunnel invert.

(b) Pipe Casing: Furnish all material and equipment and perform all labor required to install steel pipe casing at locations indicated on the Drawings and as specified.

(1) Boring: The steel casing pipe shall be Schedule 30 steel pipe manufactured from steel conforming to ASTM A 139, Grade B. Size and thickness shall be as follows:

UNDER RAILROADS

Pipe Diameter Inches	Casing Diameter Inches	Wall Thickness inches
6	14	0.250
8	18	0.250
10	20	0.281
12	22	0.312
14	24	0.344
16	30	0.406
18	30	0.406
20	32	0.469
24	36	0.469
30	42	0.500

UNDER HIGHWAYS

Pipe Diameter Inches	Casing Diameter Inches	Wall Thickness inches
6	12	0.250
8	16	0.250
10	16	0.250
12	18	0.250
14	22	0.250
16	24	0.250
18	30	0.312
20	30	0.312
24	36	0.375
30	42	0.375

The outside of the casing pipe shall be primed and coated with a hot coal tar enamel a minimum of 3/32-inches thick. Only new primed and coated pipe shall be used.

Install the steel pipe casing by the dry boring method. Bore the hole and install the casing through the soil simultaneously by a cutting head on a continuous auger mounted inside the casing pipe. Fully weld lengths of casing pipe to the preceding section in accordance with AWS recommended procedures. After the boring and installation of the casing is complete, install a cleaning plug on the rig and clean the casing.

(c) Tunnel: Install the tunnel liner in strict accordance with requirements of the Division, Department of Transportation (DOT), Railroad Company, or other governing agencies. Provide any special insurance coverage required by the governing body. A minimum of five years of experience in construction of tunnels of the general size is required of the tunnel installer. Submit evidence of experience with shop drawings for review by the Division.

Excavate tunnel by full face, heading and bench, or multiple drift procedures. Any procedure utilizing a full or partial shield, a tunneling machine or other equipment which exerts a force on the liner plates for the purpose of propelling, steering or stabilizing the equipment will not be allowed.

Prior to any work involving explosives, make application to the Division, DOT, or other governing agencies, for a special permit which will be in addition to any tunneling permit not involving explosives.

Comply with all requirements and conditions of all permits including required submittals.

Schedule the work so as not to interfere with or in any way endanger traffic flow on the highway or railway. Provide all required safety measures as specified in the Georgia Manual on Uniform Traffic Control Devices.

(1) Materials: Tunnel liner plates shall be manufactured from steel conforming to ASTM A 569 with the following mechanical properties before cold forming:

Minimum Tensile Strength = 42,000 psi
Minimum Yield Strength = 28,000 psi
Elongation, 2 inches = 30 %

Liner plates shall be 10 gauge, with the neutral axis diameter shown on the Drawings for each crossing. All plates shall be formed to provide circumferential flanged joints. Longitudinal joints may be flanged or offset lap seam type. All plates shall be punched for bolting on both longitudinal and circumferential seams or joints. Bolt spacing in circumferential flanges shall be in accordance with the manufacturer's standard spacing and shall be a multiple of the plate length so that plates having the same curvature shall be interchangeable and will permit staggering of the longitudinal seams. Bolt spacing at flanged longitudinal seams shall be in accordance with the manufacturer's standard but not less than that required to meet the longitudinal seam strength requirements of Section 13 of AASHO Standard Specifications for Highway Bridges.

All liner plates in one tunnel shall be the same type.

Liner plates shall be hot-dip galvanized in accordance with ASTM A 123 and bituminous coated.

Bolts shall conform to ASTM A 307 Grade A, and shall be hot-dip galvanized in accordance with ASTM A 153.

Grout nipples shall be 2-inch minimum diameter tapped couplings welded into place over holes cut in the liner plate.

Grout shall consist of 1 part Portland cement, 2 parts masonry lime, 4 parts mortar sand, 2% of an approved admixture, i.e. Bentonite, Septamine Stearex, or Hydrocide Liquid, and where required, a retardant. The quantity of mixing water used shall be that which will produce a workable mixture of grout capable of being pumped into the voids created by the tunneling.

Brick shall be whole and hardburned, conforming to ASTM C32 Grade MS. Mortar shall be made of one part Portland cement and two parts clean sharp sand. Cement shall be Type 1 and shall conform to ASTM C 150. Sand shall meet ASTM C 53.

(2) Construction of Tunnel: Construct tunnel so that no settlement of the overpassing roadway or railway section will occur. In order to prevent such settlement, the use of poling plates, brest boards, shields, and soil solidification or a combination of these methods may be necessary.

Install steel liner plates as soon as possible, but no more than 5 feet of tunnel shall remain unlined while tunneling operations are in progress. Not more than 1 foot of tunnel shall be left unlined at the end of the day's operation.

Liner plates shall be installed in accordance with the manufacturer's recommendations and shall be self-supporting.

The tunnel excavation shall have a diameter essentially the same as the outside diameter of the liner plates.

Locate liner plates with grout couplings at the top of the tunnel at intervals not to exceed 10 feet.

Install additional plates with grout couplings on each side of the tunnel between the top couplings.

Pressure grout all voids in the area outside the plates every 10 feet and at the end of the work shift. Pressure grout more frequently if soil conditions dictate. Before grouting any segment of the tunnel liner, seal that segment sufficiently between the liner plates and the surrounding soil to retain the grouting pressure. Locate seals at the entrance of the tunnel, between grout coupling, and within one foot of the end of the tunnel at the end of the work shift.

Provide pumping equipment for grouting operations. Pump horsepower and the resulting pressure in the grouting line shall be sufficient to completely fill the voids without buckling or shifting the liner plates or damaging the roadway.

Repair damaged spelter coating in accordance with DOT specifications Section 645. Any plates having damaged spelter or bituminous coatings, which, in the opinion of the Division cannot be satisfactorily repaired, shall be replaced.

(d) Installation of Pipe: After installation of the casing is complete, install the pipe line by a method that has received prior approval of the Division.

Close the ends of the casing with 4 inch brick walls, plastered with Portland Cement mortar and waterproofed with asphaltic roofing cement.

Leave a 4 inch x 8 inch opening at the bottom of the lowest closure for drainage.

(e) Safety:

(1) Boring: Provide all necessary bracing, bulkheads, and shields to ensure complete safety to all traffic at all times during the work. Perform the work in such a manner as to not permanently damage the roadbed or interfere with normal traffic over it. If in the opinion of the Division the installation is being conducted in an unsafe manner, the Contractor/Developer will be required to stop work and bulkhead the

heading until suitable agreements are reached between the Contractor/Developer and the Division.

(2) Tunneling: Begin the tunneling operation in a pit, sheeted and shored as necessary and begin at and proceed from one end. Observe all applicable requirements of DOT, Railroad, or other regulatory agencies. Conduct the operations in such a manner that all work will be performed below the level of the roadbed. Coordinate and schedule all of the work with the Division and other permitting agencies.

Complete all tunneling work at one particular location before work is started at another location.

A temporary bulkhead against the face of the excavation shall be provided and well braced during each cessation of work while the heading is within 20 feet of railroad tracks or highway pavement.

If, in the opinion of the Division, the tunnel installation work is being conducted in a manner detrimental to the overpassing roadway or to the safety of the traveling public, all operations of tunneling shall cease until the necessary corrections have been made. In the event that distress occurs to the roadway due to the tunneling, the Contractor shall be required submit a plan to repair the roadway. The plan must be acceptable to the Division and other permitting agencies.

1.18 - STREAM AND DITCH CROSSING: The Contractor/Developer shall be responsible for securing 'wetlands' permits under Section 404 of the Clean Water Act, compliance with the River Corridors Protection Act, compliance with the Erosion and Sedimentation Act of 1975 (O.C.G.A. 12-7-6 (15)) as amended, and all other applicable laws and regulations while performing work adjacent to, or in crossing, streams and ditches. At all points where banks of streams or drainage ditches are disturbed by excavation or where natural vegetation is removed, carefully compact backfill and place rip rap to prevent subsequent settlement and erosion.

This requirement applies equally to construction along the side of a stream or drainage ditch as well as crossing stream or drainage ditch. Place rip rap a distance of not less than 10 feet upstream and 10 feet downstream from any disturbed area. Extend rip rap from 1 foot below streambed to top of bank. Place to conform to the natural slope of the stream bank.

Use only one method, either (a) or (b), throughout the job.

(a) Stone Rip Rap: Use sound, tough, durable stones resistant to the action of air and water. Slabby or shaley pieces will not be acceptable. Specific gravity shall be 2.0 or higher.

Minimum weight of individual stones shall be 50 pounds. The maximum allowable dimension for an individual stone is 24 inches. The minimum allowable dimension for an individual stone is 6 inches. At least 50% of the stones shall have a minimum dimension of 12 inches.

Imbed stone rip rap by hand so as to form a compact layer at least 12 inches thick. Place rip rap in such a way that the smaller stones are not segregated but evenly distributed. Place chinking stones in the crevices between the larger stones so that a dense, well graded mass is produced.

(b) Sand-Cement Bag Rip Rap: Use cement sacks or burlap bags having a capacity of from 1 to 2 cubic feet. Do not use bags previously used for sugar or chemicals. Fill bags with a mixture of one part Portland Cement to five parts sand.

Imbed bags by hand to form a compact layer at least 12 inches thick. Place with over lapping joints. The finished surface shall not deviate from that specified by more than 3 inches at any point.

1.19 – TESTING, INSPECTION, & REJECTION OF WORK: When a length of pipe approved by the Division is ready for testing, fill the line with water, bleed out all air and make a leakage test in accordance with the latest revision of AWWA C600.

(a) Preparation: Provide a test pump, an accurate water meter, and all other accessories required to make the test. Provide a corporation stop at each high point on the pipe to bleed off air. Provide and remove all temporary bulkheads, plugs, and flanges required to perform the pressure test.

(b) Test Pressure and Leakage: Test the pipe line at 200 psi measured at the lowest point. Leakage shall not exceed 0.11 gallons per hour per inch diameter per thousand feet. Test for a minimum of two hours. Test pressure shall not vary by more than ±5 psi for the duration of the test.

When testing against closed gate valves, an additional leakage per closed valve of 0.0078 gallons per hour per inch diameter of nominal valve size shall be allowed.

If leaks are detected, locate, repair, and retest. If results are not totally satisfactory, the Division may require testing for a longer period of time.

(c) Existing Valves: Do not operate valves in the existing system without the specific authorization and direct supervision of the Division.

(d) Testing of Materials: Unless otherwise specifically provided for in the Specifications, the inspection and testing of products to be incorporated in the work at the site shall be made by bureaus, laboratories, or agencies approved by the Owner and the cost of such inspection and testing shall be paid by the Contractor. The Contractor shall furnish evidence satisfactory to the Engineer that the products have passed the required tests prior to their incorporation into the work. The Contractor shall promptly segregate and remove rejected products from the site of the work.

(e) Inspection: The Contractor shall furnish the Engineer with every reasonable facility for ascertaining whether or not the work performed and products used are in accordance with the requirements and intent of the Specifications and Contract Documents. No work

shall be done or products used without suitable supervision or inspection by the Engineer or his representative. Failure to reject any defective work or product shall not in any way prevent later rejection when such defect is discovered, or obligate the Owner to final acceptance.

(f) Rejection of Work and Materials: All products furnished and all work done that is not in accordance with the Drawings or Specifications or that is defective will be rejected. All rejected products or work shall be removed immediately. If rejected products or work is not removed within forty-eight hours, the Engineer or Owner shall have the right and authority to stop the work immediately and shall have the right to arrange for the removal of said rejected products or work at the cost and expense of the Contractor. All rejected products or work shall be replaced with other products or work which conforms with the Drawings and Specifications.

(g) Contractor's Responsibility: Inspection of the work shall not relieve the Contractor of any of his obligations to fulfill his contract and defective work shall be made good regardless of whether such work has been previously inspected by the Engineer and accepted or estimated or payment. The failure of the Engineer to reject improper work shall not be considered a waiver of any defect which may be discovered later, or for work actually defective.

1.20 - DISINFECTING PIPE LINES: Disinfect all installed potable water lines and all other pipe lines which may have been contaminated by the work. The Contractor must coordinate with the Division for all sampling and bacteriological testing.

(a) Disinfection: Prepare a one percent chlorine solution using high-test calcium hypochlorite (HTH) and place an adequate quantity of this solution into the water mains to obtain a minimum chlorine concentration of 50 mg/l. Application of the chlorine may be at the time of filling for pressure testing. At the end of 24 hours check the chlorine residual and if found to be less than 25 mg/l add chlorine solution and check again after 24 hours.

The following is the minimum quantity of solution required per 100 feet of pipe line to obtain the desired concentration:

Pipe Size	Gallons of Solution	Solution Strength,%
1 inch	.02	1
2 inches	.08	1
3 inches	.18	1
4 inches	.32	1
6 inches	.73	1
8 inches	1.30	1
10 inches	2.04	1
12 inches	2.88	1
14 inches	0.38	10
16 inches	0.50	10

18 inches	0.63	10
20 inches	0.78	10
24 inches	1.12	10
30 inches	1.72	10

(b) Flushing: After completing chlorination, flush the line with potable water and test for chlorine residual at the point of discharge until the chlorine residual is equal to the chlorine residual of the water used for flushing. Allow the pipe line to remain full for 24 hours and take samples for bacteriological examination. Analyze these samples. Results must be acceptable to the State. If the samples are not satisfactory, perform additional sterilization until acceptable samples are obtained.

(c) Sampling: Sampling determinations of chlorine residual for sterilization and flushing shall be performed by the Division's laboratory personnel. Sampling will be available during normal business hours Monday through Friday. The Division shall be requested to perform such sampling and testing no less than 48 hours prior to the sampling time. The costs of all tests and sampling shall be the responsibility of the Contractor.

1.21 – EROSION AND SEDIMENT CONTROL: The Contractor/Developer shall observe all local laws and ordinances in relation to erosion and sediment control as they pertain to this project. All erosion control plans and construction shall be in accordance with the "Manual for Erosion and Sediment Control in Georgia" latest revision, the State of Georgia Erosion and Sedimentation Control Act of 1975 as amended in 1995, and Best Management Practices. All erosion control measures shall be designed to effectively control erosion and sedimentation for all rainfall events up to and including the 25-year, 24 hour rainfall.

The Contractor/Developer shall designate one individual to be responsible for implementation and maintenance of erosion and sedimentation controls on a 24-hour, everyday basis. The Contractor/Developer shall furnish to the City of Rome the individual's name, address and 24-hour telephone number and notify the City of any updates as necessary.

All erosion and sedimentation control measures must be installed prior to the initiation of any construction activity. Additional erosion and sedimentation control devices shall be installed as needed, or as directed by the City of Rome.

The City of Rome Public Works Division or Water and Sewer Division shall have the right to stop work when erosion and sediment control measures are not being implemented in accordance with Best Management Practices. No claim will be allowed by the Contractor/Developer for cost of downtime of men and equipment associated with any shutdown of the Contractor's operations.

1.22 - GRASSING: All graded and disturbed areas shall be grassed upon the completion of construction. This work shall consist of preparing ground surfaces and applying lime, fertilizer, seed and mulch in accordance with the Manual for Erosion Control in Georgia and Georgia D.O.T. Standard Specifications latest edition. The Contractor/Developer shall furnish water as necessary to obtain an acceptable stand of grass as defined below.

NOTE: All grass removed or damaged in residential areas shall be replaced using the same variety of grass at the first appropriate season.

Grassing shall follow backfill operations as closely as possible. At no time shall the amount of backfilled trench which has not been seeded and mulched exceed 400'.

Grassed areas shall be inspected by the City of Rome and shall be considered complete only if grassing has reached a point of maturity such that no bare spots shall be larger than one square foot. Any existing bare spots shall be evenly distributed among the total grassed area, and shall not make up more than on percent of total grassed area.

Appendix B of this specification contains grassing specifications for disturbed area stabilization as outlined in the Manual for Erosion and Sediment Control in Georgia.

1.23 - PROTECTION AND RESTORATION OF WORK AREA:

(a) General: Return all items and all areas disturbed, directly or indirectly by work under these Specifications, to their original condition or better, as quickly as possible after work is started.

(b) Man-Made Improvements: Protect, or remove and replace with the Division's approval, all fences, piers, docks, walkways, mailboxes, pipe lines, drain culverts, power and telephone lines and cables, and other improvements that may be encountered in the work.

(c) Cultivated Growth: Do not disturb cultivated trees or shrubbery unless approved by the Division. Any such trees or shrubbery that must be removed shall be heeled in and replanted under the direction of an experienced nurseryman.

(d) Cutting of Trees: Do not cut trees for the performance of the work unless specifically approved by the Division. Protect trees that remain in the vicinity of the work from damage from equipment. Do not store spoil from excavation against the trunks. Remove excavated material stored over the root system of trees within 30 days to allow proper natural watering of the root system. Repair any damaged tree over 3-inches in diameter, not to be removed, under the direction of an experienced nurseryman. All trees and brush that require removal shall be promptly and completely removed from the work area and disposed of by the Contractor. No stumps, wood piles, or trash piles will be permitted on the work site.

(e) Grassing: Replant grass removed or damaged in residential areas using the same variety of grass and at the first appropriate season. In all areas, promptly establish successful stands of grass as outlined in section 1.22 above and Appendix B.

(f) Erosion Control: Plan excavation work to prevent erosion and the washing of soil into adjacent streams. Limit the amount of open excavation at any one time. Place spoil in the proper place and keep natural water routes open.

(g) Disposal of Rubbish: Dispose of all materials cleaned and grubbed during the construction of the project in accordance with the applicable codes and rules of the appropriate regulatory agencies, county, state and federal. Burial of trees, limbs, stumps or other rubbish along or in trench shall is prohibited.

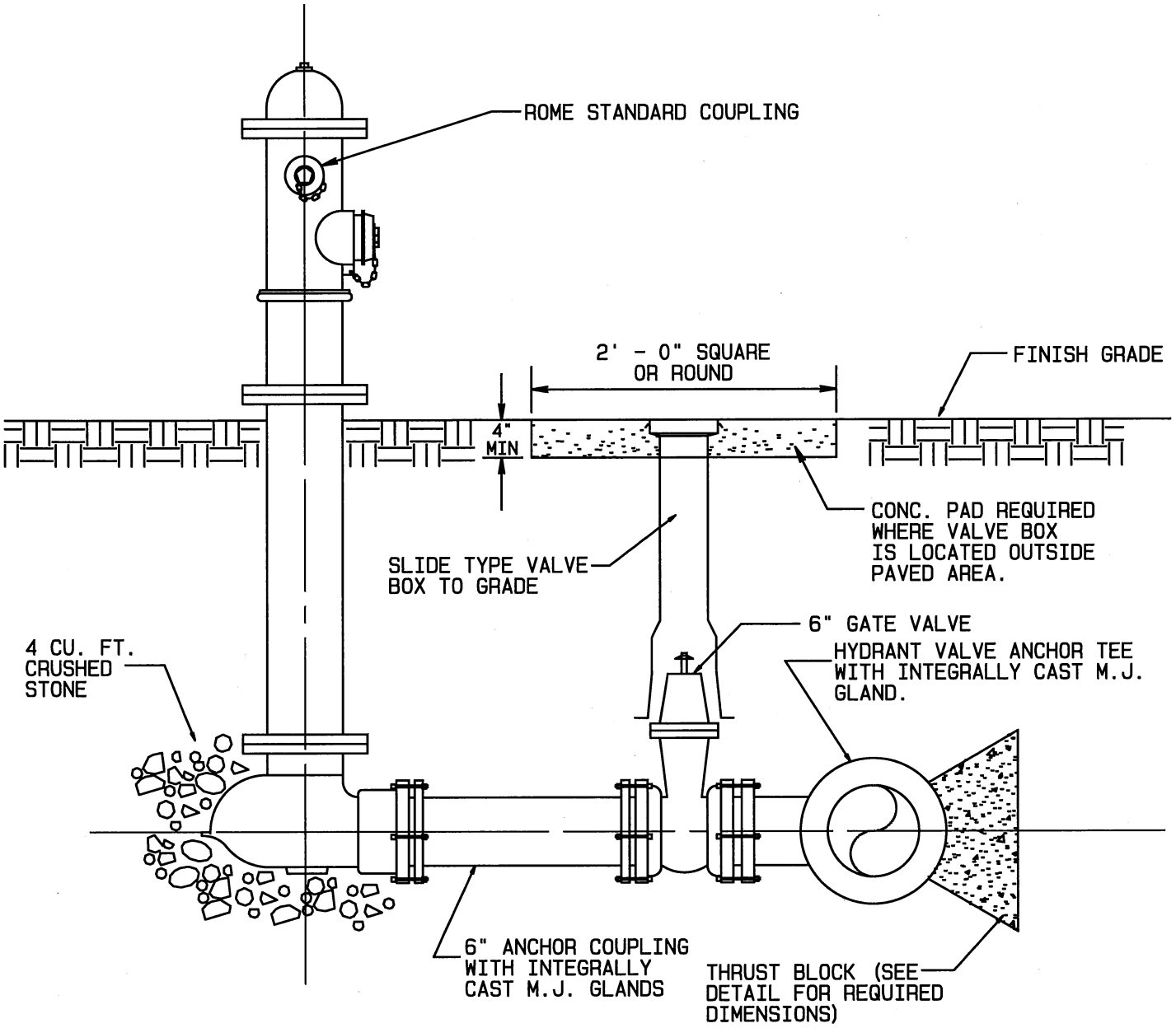

TYPICAL FIRE HYDRANT ASSEMBLY

NOT TO SCALE

NOTE: ALL FIRE HYDRANTS TO BECOME THE MAINTENANCE RESPONSIBILTY OF THE CITY OF ROME SHALL BE MUELLER CENTURION.

CITY OF ROME, GEORGIA
ENGINEERING DEPARTMENT

TYPICAL FIRE HYDRANT ASSEMBLY
STANDARD DETAIL

SCALE: AS SHOWN	**DRAWN BY:** BSI
DATE: MARCH 1998	**FINAL APPROVAL:**

EFFECTIVE DATE: 04-21-15 **SHEET** 1 **OF** 1

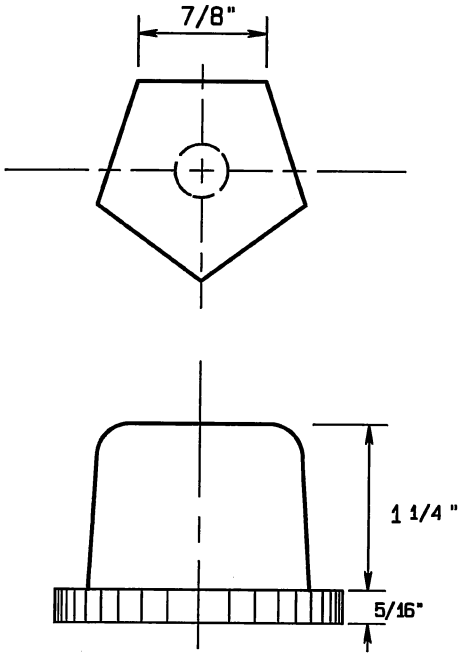

OPERATING NUT

NOT TO SCALE

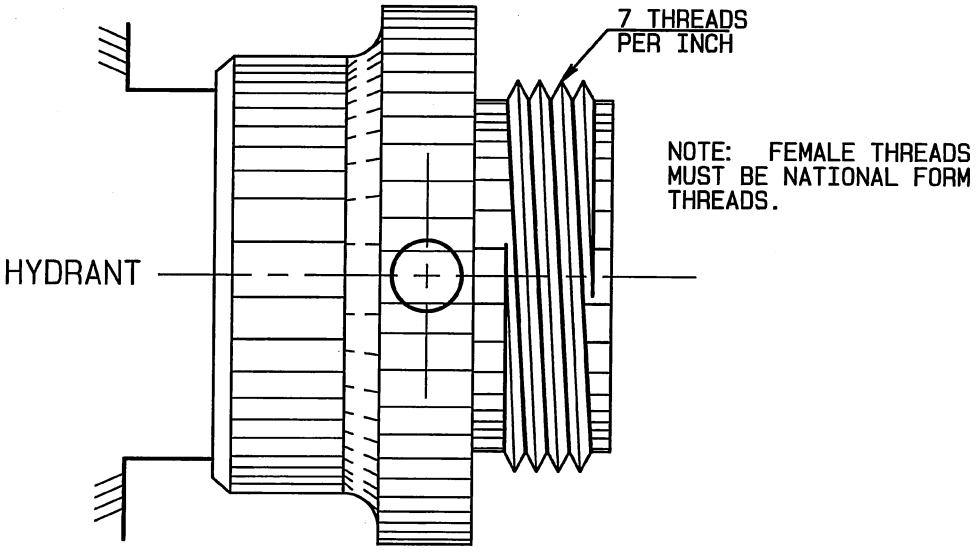

ROME STANDARD HOSE COUPLING

NOT TO SCALE

CITY OF ROME, GEORGIA
ENGINEERING DEPARTMENT

ROME STANDARD HOSE COUPLING
STANDARD DETAIL

SCALE: AS SHOWN	DRAWN BY: BSI
DATE: MARCH 1998	FINAL APPROVAL:

SHEET 1 OF 1

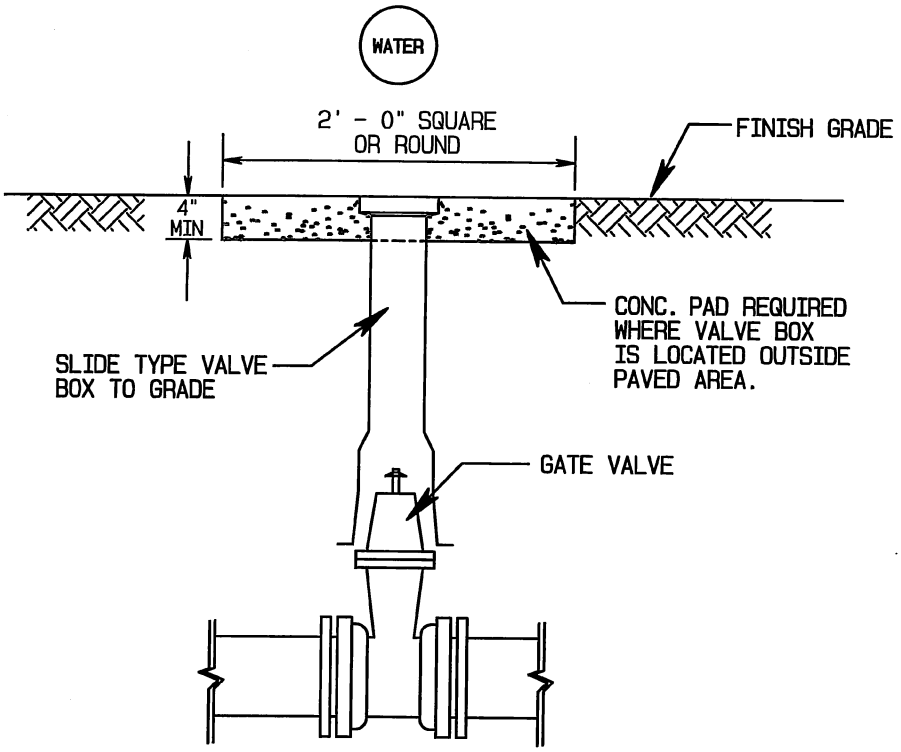

TYPICAL GATE VALVE & BOX

NOT TO SCALE

CITY OF ROME, GEORGIA
ENGINEERING DEPARTMENT

TYPICAL GATE VALVE & BOX
STANDARD DETAIL

SCALE: AS SHOWN	**DRAWN BY:** BSI
DATE: MARCH 1998	**FINAL APPROVAL:**

EFFECTIVE DATE: 10-21-08 **SHEET** 1 **OF** 1

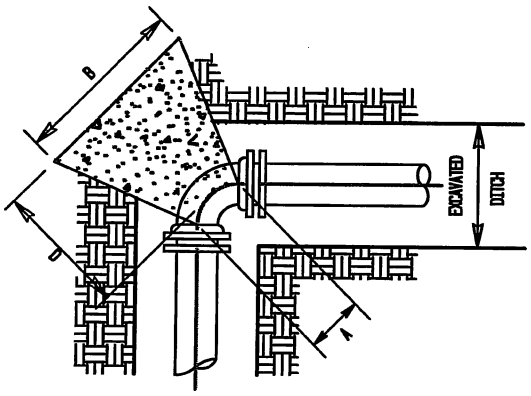

PLAN

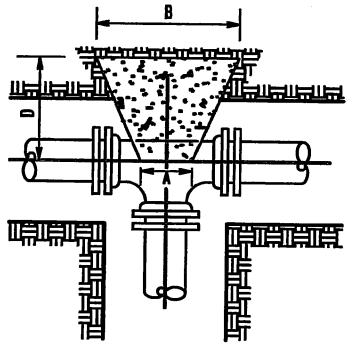

PLAN

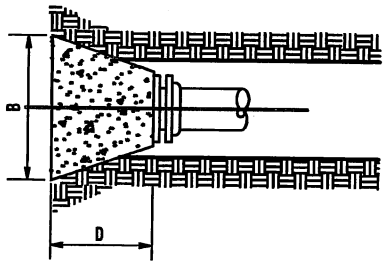

PLAN

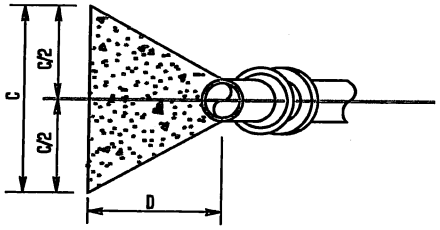

SECTION

THRUST BLOCKING - BENDS

N.T.S.

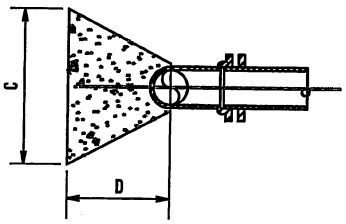

SECTION

THRUST BLOCKING - TEES

N.T.S.

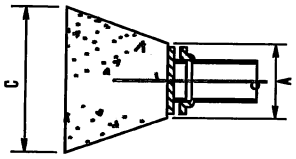

SECTION

THRUST BLOCKING - PLUGS

N.T.S.

THRUST BLOCK DIMENSIONS

PIPE SIZE	90 BEND				45 BEND				22 1/2 BEND				11 1/4 BEND				TEE OR PLUG			
	A	B	C	D	A	B	C	D	A	B	C	D	A	B	C	D	A	B	C	D
30"	2'-9"	10'-6"	10'-6"	7'-0"	1'-6"	7'-9"	7'-9"	4'-9"	1'-10"	5'-9"	5'-9"	3'-0"	1'-11"	4'-0"	4'-0"	2'-6"	2'-9"	8'-9"	9'-0"	5'-9"
24"	2'-7"	8'-6"	8'-6"	5'-9"	1'-3"	6'-3"	6'-3"	3'-9"	1'-8"	4'-6"	4'-6"	2'-3"	1'-9"	3'-3"	3'-3"	2'-3"	2'-6"	7'-0"	7'-3"	4'-9"
20"	2'-1"	7'-0"	7'-0"	4'-9"	1'-0"	5'-3"	5'-3"	3'-3"	1'-5"	4'-0"	4'-0"	2'-0"	1'-6"	2'-9"	2'-9"	2'-0"	2'-4"	6'-0"	6'-0"	3'-9"
18"	1'-11"	6'-0"	6'-0"	4'-0"	1'-0"	4'-9"	4'-9"	3'-0"	1'-3"	3'-6"	3'-6"	2'-0"	1'-4"	2'-6"	2'-6"	1'-9"	1'-2"	5'-3"	5'-6"	3'-6"
16"	1'-9"	5'-9"	5'-9"	4'-0"	0'-11"	4'-3"	4'-3"	2'-9"	1'-2"	3'-0"	3'-0"	1'-6"	1'-3"	2'-3"	2'-3"	1'-6"	1'-6"	4'-9"	4'-9"	3'-3"
14"	1'-7"	5'-0"	5'-0"	3'-6"	0'-10"	3'-9"	3'-9"	2'-6"	1'-1"	2'-9"	2'-9"	1'-6"	1'-2"	2'-0"	2'-0"	1'-3"	1'-6"	4'-0"	4'-3"	2'-9"
12"	1'-4"	4'-3"	4'-6"	3'-3"	0'-10"	3'-3"	3'-3"	2'-3"	1'-1"	2'-6"	2'-6"	1'-6"	1'-2"	1'-9"	1'-9"	1'-3"	1'-3"	3'-6"	3'-9"	2'-6"
10"	1'-3"	3'-9"	3'-9"	2'-9"	0'-9"	2'-9"	2'-9"	1'-9"	1'-0"	2'-0"	2'-0"	1'-3"	1'-0"	1'-6"	1'-6"	1'-0"	1'-3"	3'-0"	3'-0"	2'-0"
8"	1'-0"	3'-0"	3'-0"	2'-3"	0'-7"	2'-3"	2'-3"	1'-6"	0'-10"	1'-9"	1'-9"	1'-0"	0'-10"	1'-3"	1'-3"	1'-0"	1'-0"	2'-3"	2'-6"	1'-9"
6"	0'-11"	2'-3"	2'-3"	1'-9"	0'-7"	1'-9"	1'-9"	1'-3"	0'-9"	1'-6"	1'-6"	1'-0"	0'-9"	1'-0"	1'-0"	0'-9"	0'-11"	1'-9"	2'-0"	1'-6"
4"	0'-9"	1'-6"	1'-6"	1'-3"	0'-5"	1'-6"	1'-6"	1'-3"	0'-7"	1'-3"	1'-3"	1'-0"	0'-7"	0'-9"	0'-9"	0'-9"	0'-11"	1'-3"	1'-3"	1'-0"

NOTES:

1. THRUST BLOCKING TO BE CLASS "B" CONCRETE, NO SAKRETE OR QUICKRETE PERMITTED.
2. DIMENSIONS CALCULATED USING A SOIL LOAD BEARING CAPACITY OF 2000 PSF. IF SOIL BEARING CAPACITY IS FOUND TO BE LESS THAN 2000 PSF, THE CONTRACTOR SHALL INCREASE THESE DIMENSIONS.
3. THRUST BLOCKING SHALL BEAR AGAINST UNDISTURBED SOIL.
4. DESIGN PRESSURE = 200 PSI.

CITY OF ROME, GEORGIA
ENGINEERING DEPARTMENT

TYPICAL THRUST BLOCKING
STANDARD DETAIL

SCALE: AS SHOWN	DRAWN BY: BSI
DATE: MARCH 1998	FINAL APPROVAL:

EFFECTIVE DATE: 10-21-08 SHEET 1 OF 1

ALL BEDDING MATERIAL AROUND MANHOLES IN PAVED AREAS SHALL BE COVERED WITH SILT FENCE FILTER FABRIC MEETING OR EXCEEDING GDOT STANDARD 881-2-07 FOR TYPE "C" FENCING. FABRIC SHALL EXTEND A MINIMUM OF 12-INCHES UP TRENCH WALLS, SIDE OF MAHOLE AND SHALL HAVE A MINIMUM OF 12-INCHES OF OVERLAP.

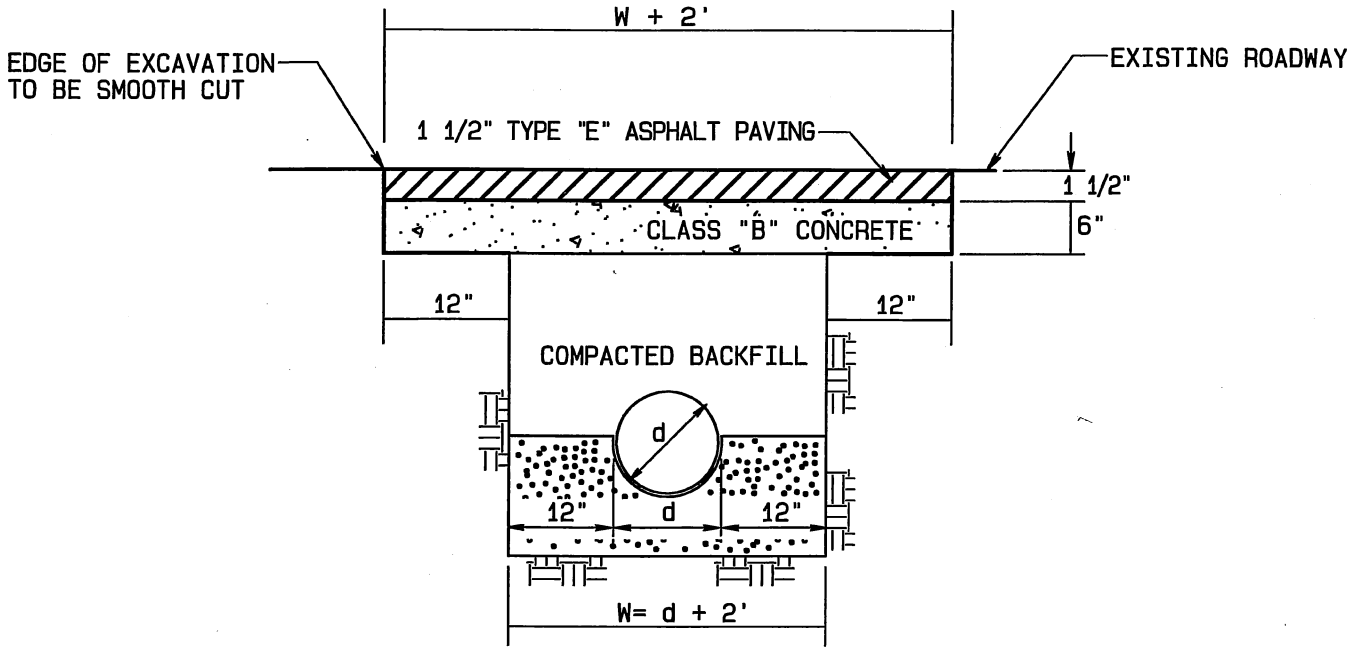

NOTE: ALL TRENCHES SHALL BE BACKFILLED AND RETURNED TO 95% COMPACTION ON THE SAME DAY THE TRENCH IS OPENED.

REPAIR OF ROADWAY CUT DETAIL

NOT TO SCALE

BACKFILL MATERIAL TO BE APPROVED BY A REPRESENTATIVE OF THE CITY OF ROME.

CONTRACTOR/UTILITY SHALL MAKE TWO (2) CUTS ACROSS THE STREET OR AROUND CUT-OUT. THE FIRST SAW CUT SHALL ALIGN WITH THE TRENCH/HOLE WALL. INITIAL EXCAVATION SHALL BE LIMITED TO THAT AREA. THE SECOND SAW CUT SHALL BE MADE AT THE LIMITS OF THE PATCH AREA WITH NO EXCAVATION TAKING PLACE IN THE 12-INCH AREA ON EACH SIDE OF THE TRENCE/HOLE UNTIL THE TRENCH HAS BEEN BACKFILLED UP TO AN ELEVATION 7-1/2-INCHES LOWER THAN THE ROADWAY.

TRENCH SHALL BE INSPECTED BY A REPRESENTATIVE OF THE CITY OF ROME FOR PROPER COMPACTION PRIOR TO THE PLACEMENT OF THE CONCRETE.

CITY OF ROME, GEORGIA
ENGINEERING DEPARTMENT

REPAIR OF ROADWAY CUT
STANDARD DETAIL

SCALE: AS SHOWN	DRAWN BY: BSI
DATE: MARCH 1998	FINAL APPROVAL:
EFFECTIVE DATE: 11-07-13	SHEET 1 OF 1

NOTES:

1. CONTRACTOR SHALL INSTALL CORPORATION STOP, COPPER SERVICE LINE, CURB STOP AND METER BOX.

2. EACH LOT SHALL HAVE AN INDIVIDUAL TAP AND SERVICE LINE.

3. THE LETTER "W" TO BE STAMPED OR CUT INTO THE UPPER PORTION (NOT IN THE FLOW LINE) OF CURB WHERE THE SERVICE LINE PASSES UNDER.

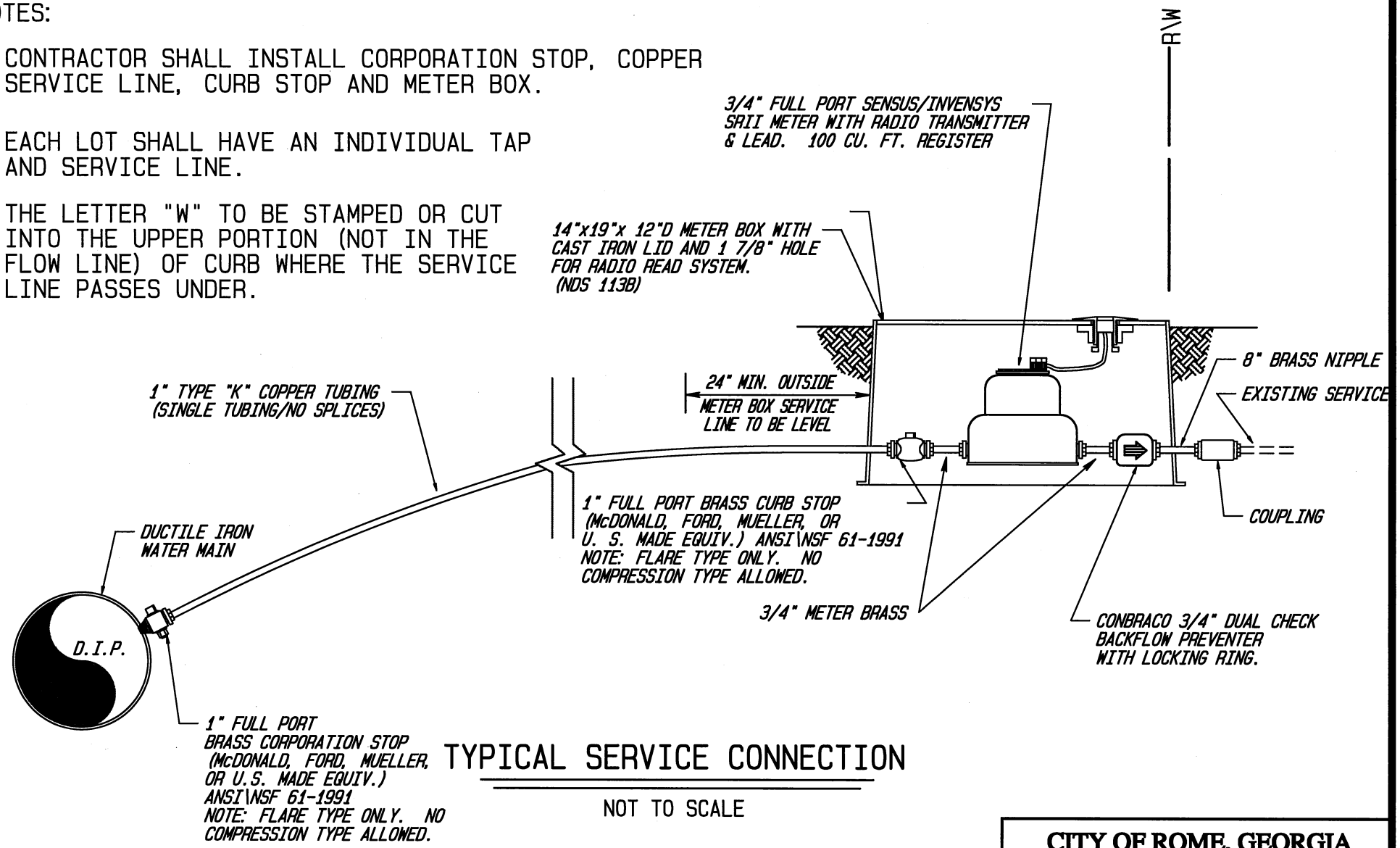

TYPICAL SERVICE CONNECTION

NOT TO SCALE

CITY OF ROME, GEORGIA
ENGINEERING DEPARTMENT

TYPICAL WATER SERVICE CONNECTION STANDARD DETAIL (SINGLE FAMILY LOT)

SCALE: AS SHOWN	DRAWN BY: BSI
DATE: 11/01/01	FINAL APPROVAL:

EFFECTIVE DATE: 12-23-14 SHEET 1 OF 1

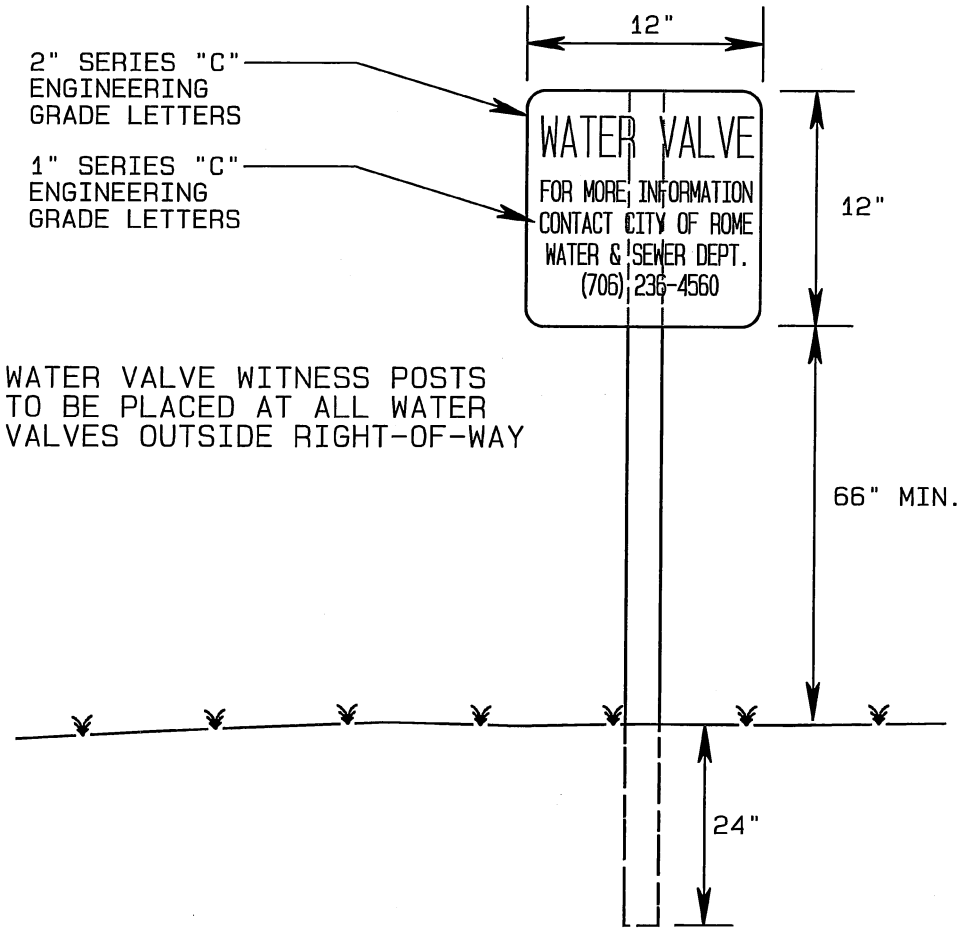

WITNESS POST DETAIL

N.T.S.

CITY OF ROME, GEORGIA
ENGINEERING DEPARTMENT

VALVE WITNESS POST
STANDARD DETAIL

SCALE: AS SHOWN	DRAWN BY: BSI
DATE: NOV. 1998	FINAL APPROVAL:

SHEET 1 OF 1

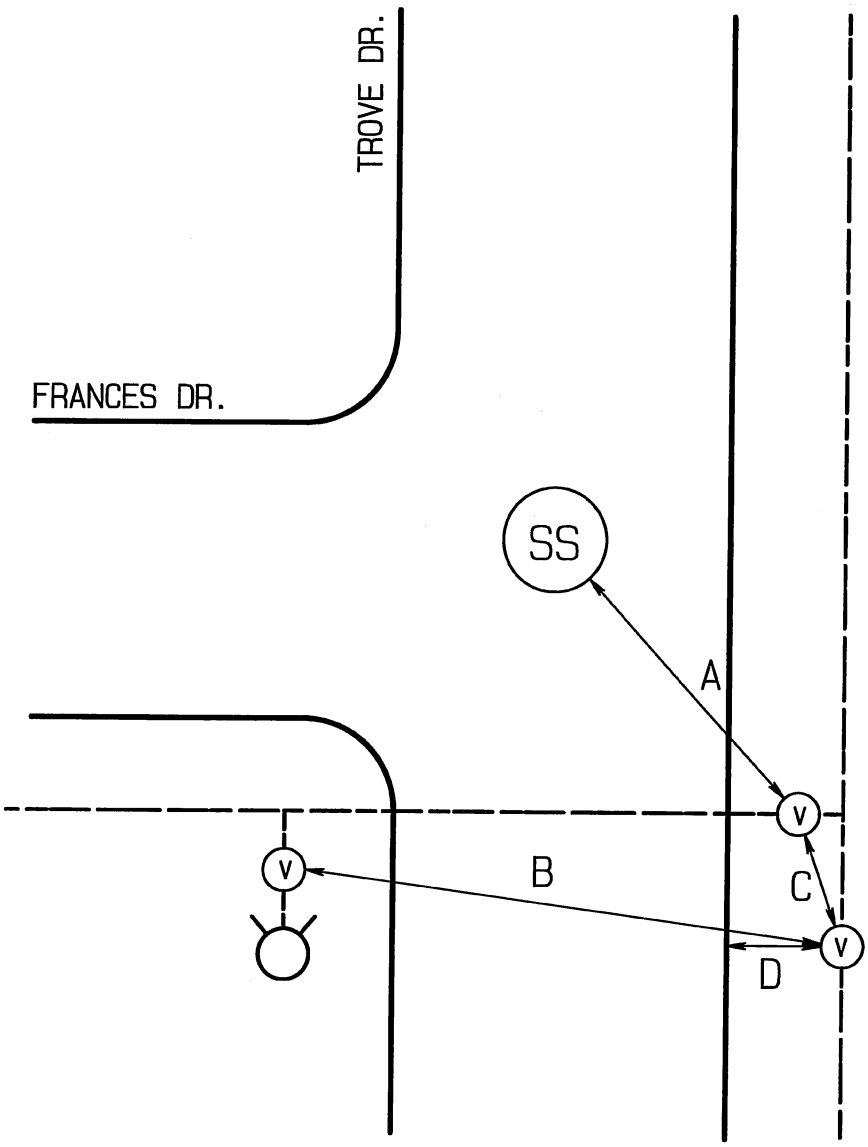

A - 30'-4"
B - 62'-2"
C - 2'-2"
D - 9'-6" TO B.C.

CITY OF ROME, GEORGIA
ENGINEERING DEPARTMENT

VALVE LOCATION SKETCH
SAMPLE DRAWING

SCALE: AS SHOWN	DRAWN BY: BSI
DATE: FEB. 1999	FINAL APPROVAL:

SHEET 1 OF 1

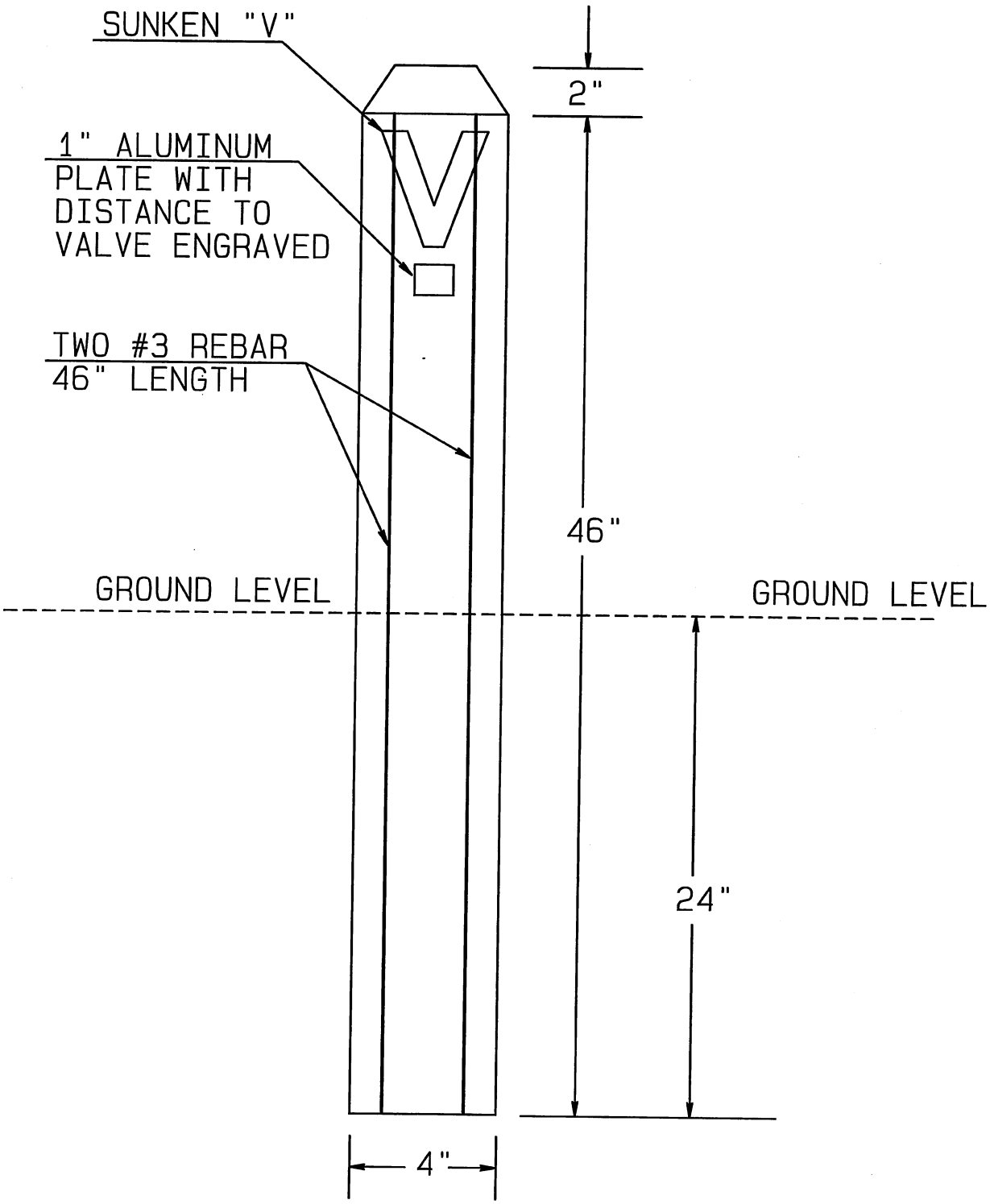

TYPICAL CONCRETE VALVE MARKER

NOT TO SCALE

CITY OF ROME, GEORGIA
ENGINEERING DEPARTMENT

TYPICAL CONCRETE VALVE MARKER

SCALE: AS SHOWN	DRAWN BY: SAF
DATE: MAY 2005	FINAL APPROVAL:

SHEET 1 OF 1

NOTES:

1. CONTRACTOR SHALL INSTALL CORPORATION STOP, COPPER SERVICE LINE, CURB STOP, LID, AND METER BOX.
2. EACH UNIT SHALL HAVE AN INDIVIDUAL TAP AND SERVICE LINE.
3. THE LETTER "W" TO BE STAMPED OR CUT INTO THE UPPER PORTION (NOT IN THE FLOW LINE) OF CURB WHERE THE SERVICE LINE PASSES UNDER.

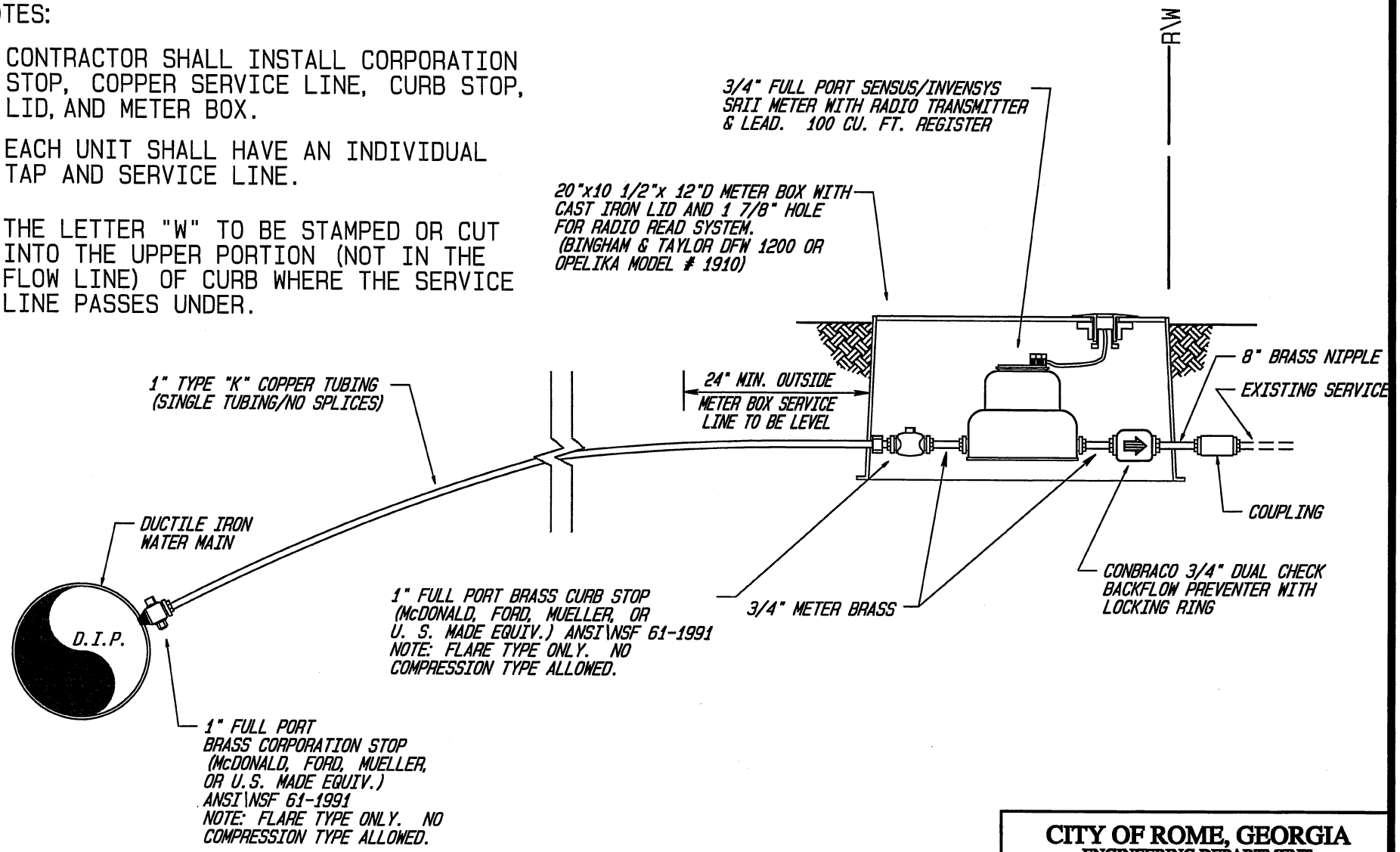

TYPICAL SERVICE CONNECTION

NOT TO SCALE

CITY OF ROME, GEORGIA
ENGINEERING DEPARTMENT

TYPICAL WATER SERVICE CONNECTION STANDARD DETAIL (DUPLEX LOT)

SCALE: AS SHOWN	DRAWN BY: BSI
DATE: 06/17/02	FINAL APPROVAL:

EFFECTIVE DATE: 12-04-08 SHEET 1 OF 1

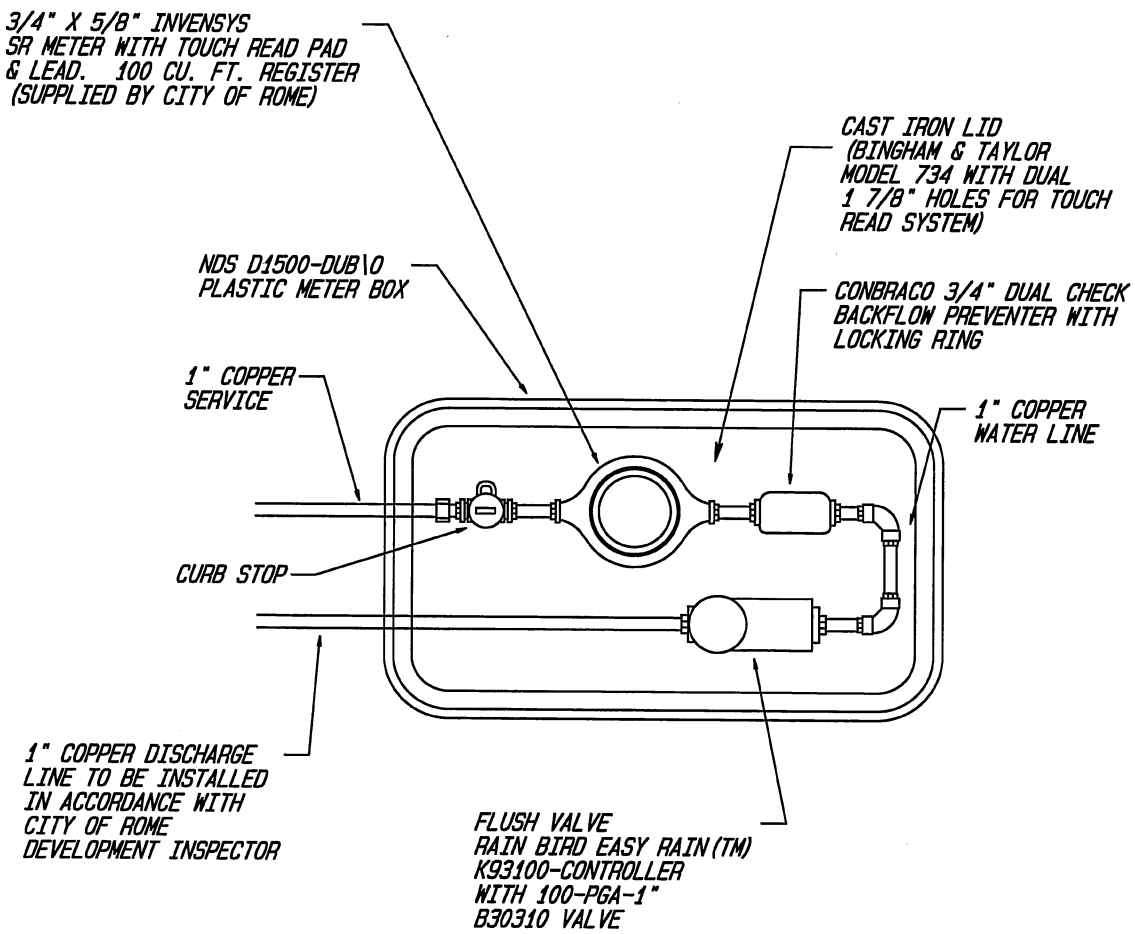

TYPICAL AUTOMATIC FLUSH INSTALLATION

NOT TO SCALE

CITY OF ROME, GEORGIA
ENGINEERING DEPARTMENT

AUTOMATIC FLUSH INSTALLATION
STANDARD DETAIL

SCALE: AS SHOWN	**DRAWN BY:** BSI
DATE: 05-01-05	**FINAL APPROVAL:**

EFFECTIVE DATE: 05-01-05 **SHEET** 1 **OF** 1

FIRE LINE SERVICE & VAULT DETAIL

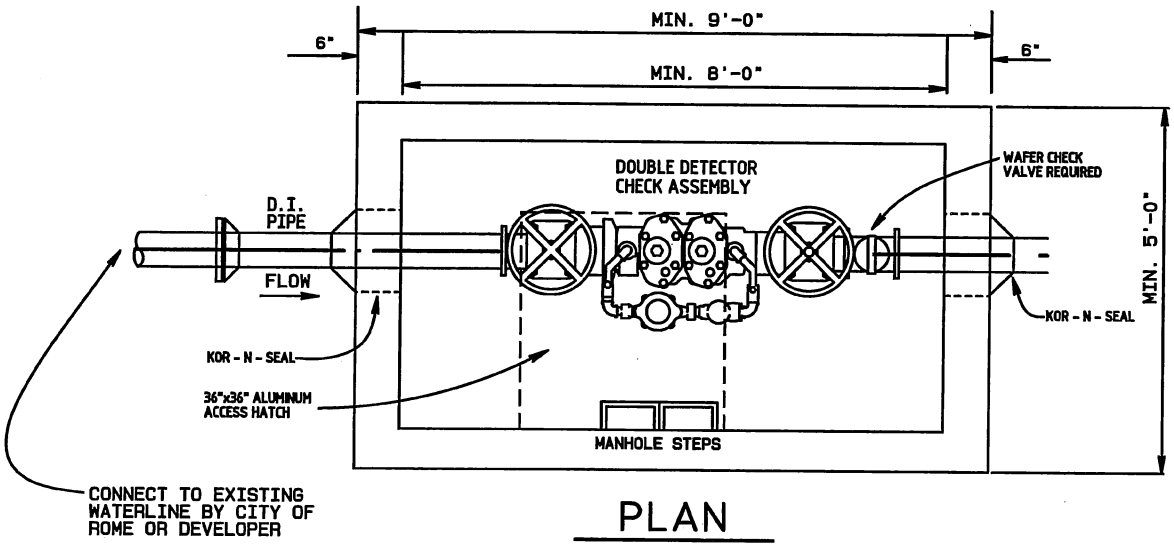

PLAN

N.T.S.

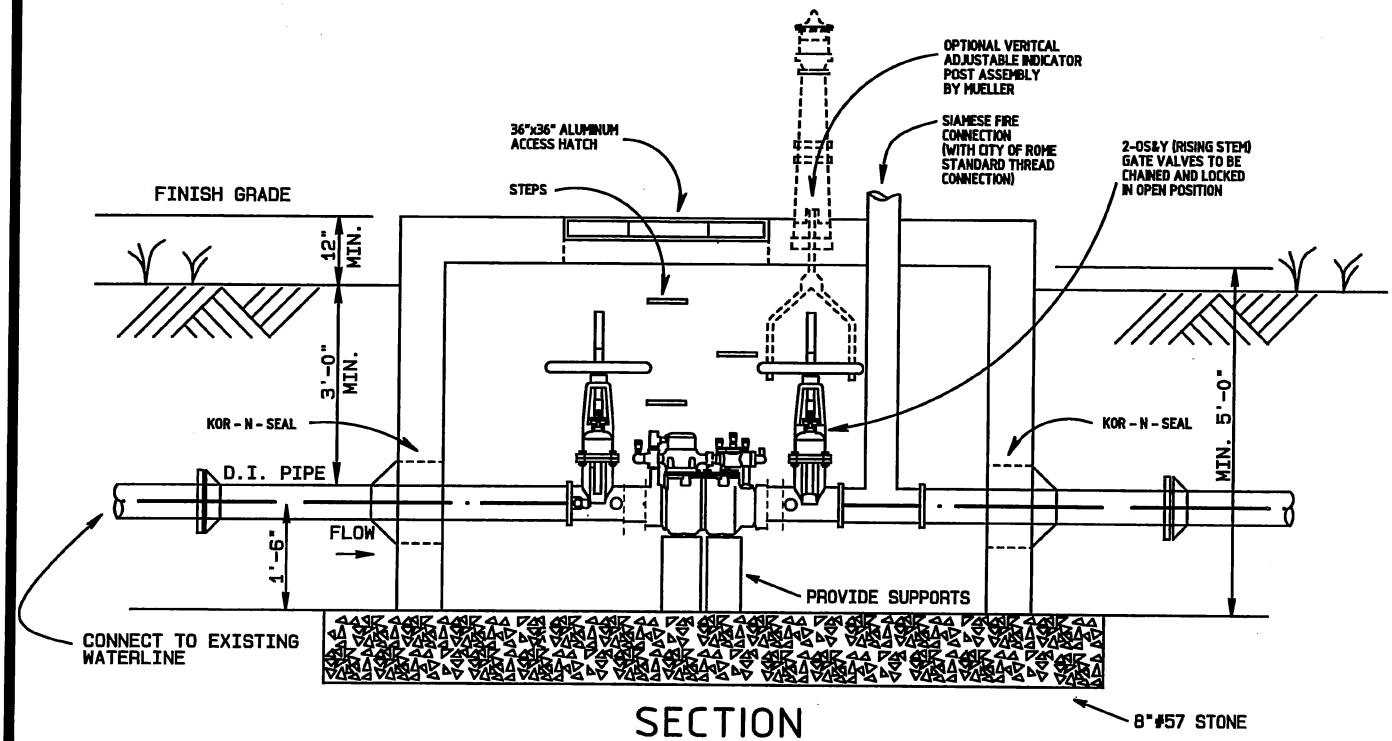

SECTION

N.T.S.

NOTES:

1. MECHANICAL JOINT FITTINGS SHALL BE USED OUTSIDE THE PIT AND FLANGED FITTINGS INSIDE THE PIT.
2. DOUBLE DETECTOR CHECK VALVE (DDCV) ASSEMBLY TO BE WATTS OR EQUAL.
3. DEVICE TESTING: ALL DDCV ASSEMBLIES SHALL BE TESTED AT TIME OF INSTALLATION AND AT LEAST ANNUALLY THEREAFTER BY AN APPROVED AND CERTIFIED TESTING SERVICE AND COPY OF TEST SUBMITTED TO THE CITY OF ROME WATER DEPARTMENT

A-12

CITY OF ROME, GEORGIA **ENGINEERING DEPARTMENT**	
FIRE LINE SERVICE & VAULT DETAIL	
SCALE: AS SHOWN	**DRAWN BY:** KEH/AWC
DATE: APRIL 2009	**FINAL APPROVAL:**
EFFECTIVE 06/27/2012	**SHEET** 1 **OF** 1

NOTES:

1. CITY OF ROME WATER AND SEWER DIVISION SHALL INSTALL CORPORATION STOP, COPPER SERVICE LINE, CURB STOP, METER AND METER BOX.

2. DEVELOPER TO PROVIDE AND INSTALL A "TESTABLE" DOUBLE CHECK VALVE (DCV) ON ALL METERS 2" AND LARGER. ALL METERS SMALLER THAN 2" SHALL HAVE A "COMBRACO" DUAL CHECK BACKFLOW PREVENTER WITH LOCKING RING AND 6" LONG BRASS NIPPLE INSTALLED BY THE CITY OF ROME.

3. IRRIGATION METERS SHALL HAVE A RPZ TYPE BACK FLOW PREVENTER (BY OWNER) OR SHALL BE INSTALLED WITH A DOUBLE CHECK VALVE (DCV) IN COMPLIANCE WITH NO. 2 ABOVE ALONG WITH A WRITTEN GURANTEE STATING THAT NO CHEMICALS SHALL BE INJECTED INTO SAID IRRIGATION LINE. THE DESIGN PLANS SHALL CLEARLY INDICATE THEREON WHICH WILL BE USED AND WHAT SIZE METER IS REQUIRED.

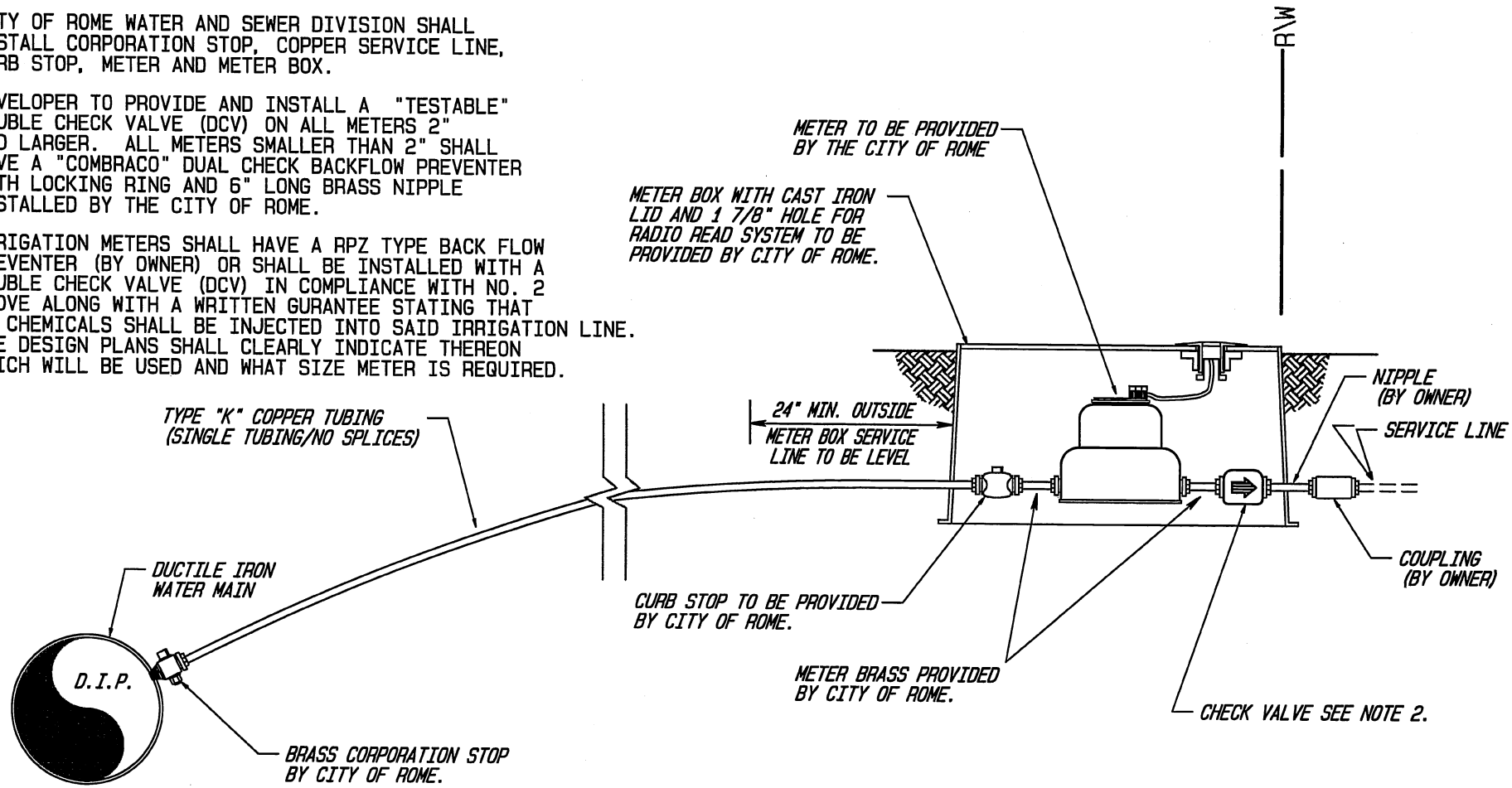

A-13

TYPICAL SERVICE CONNECTION

NOT TO SCALE

CITY OF ROME, GEORGIA
ENGINEERING DEPARTMENT

TYPICAL WATER SERVICE CONNECTION STANDARD DETAIL (COMMERICAL)

SCALE: AS SHOWN	DRAWN BY: AWC
DATE: 06/27/12	FINAL APPROVAL:

EFFECTIVE DATE: 06-27-12 SHEET 1 OF 1

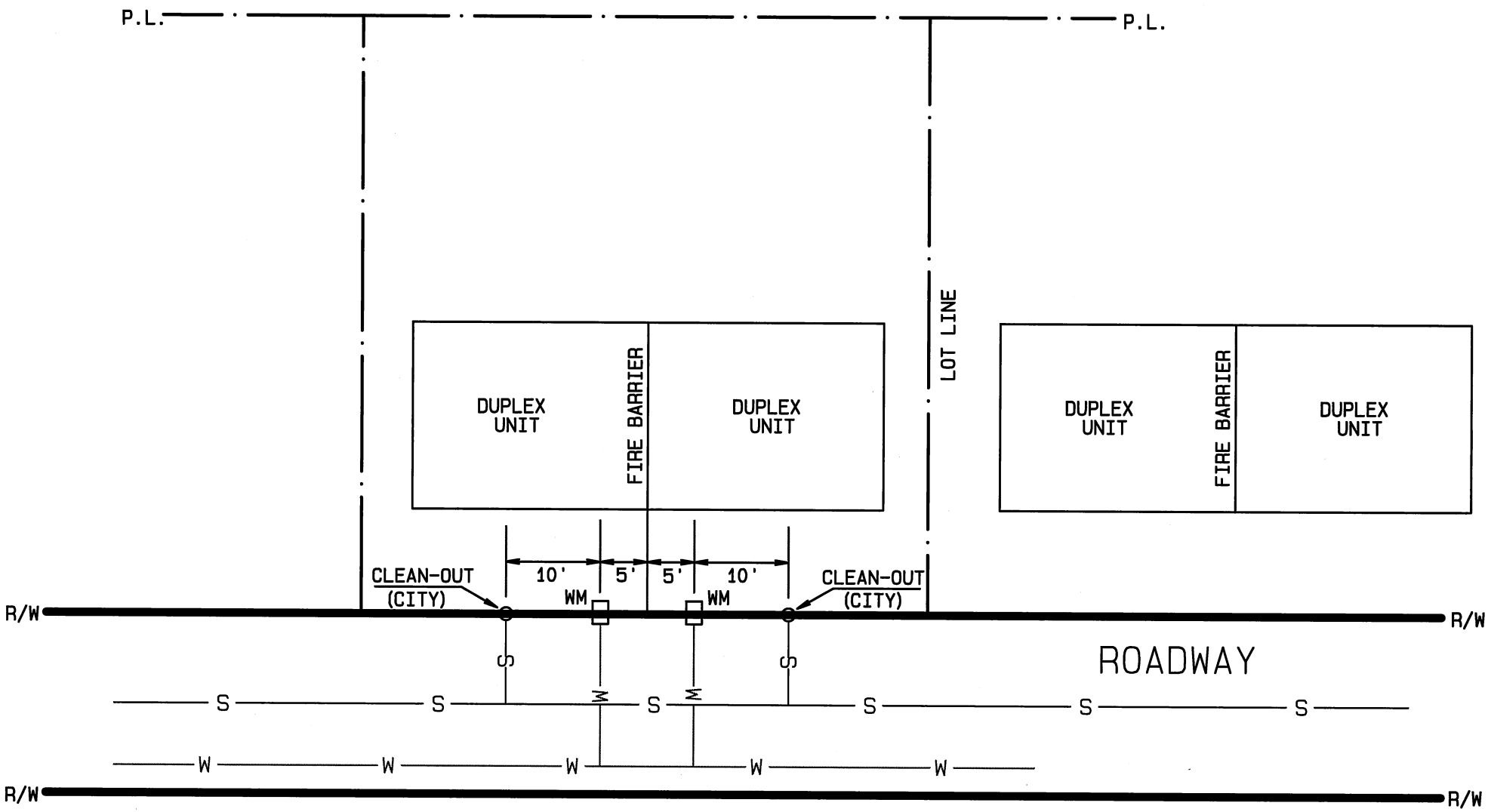

CITY OF ROME, GEORGIA
ENGINEERING DEPARTMENT

WATER AND SEWER SERVICE LOCATION
DETAIL FOR DUPLEX LOTS

SCALE: NONE	**DRAWN BY:** AWC
DATE: JUNE 9, 2004	**FINAL APPROVAL:**

EFFECTIVE DATE: 06-09-04 **SHEET** 1 **OF** 1