DIRECTORY

OWNER
City of Rome

Sammy Rich, City Manager
City of Rome
P.O. Box 1433
Rome, Georgia 30162-1433
706.236.4400

srich@romega.us

OWNER REPRESENTATIVE
Collins Project Management
45 Technology Parkway South, Suite 230
Peachtree Corners, Georgia 30092

Tom Lawrence
678.367.4896
tlawrence@collinspm.com

CONSTRUCTION MANAGER
BM&K
P.O. Box 878
Braselton, GA 30517
770-778-7720

Robert McGrath, Senior Project Manager
robert@BMandKinc.com

ARCHITECT
Menefee Architecture
1075 Brady Avenue, NW
Atlanta, GA 30318
404.876.1011

Tony Menefee, AIA, Principal
tony@menefeearchitecture.com

Jessica Grosse, Project Manager
jessica@menefeearchitecture.com

Jordan Gill, BIM Manager
jordan@menefeearchitecture.com

CIVIL ENGINEER
Breedlove Landplanning, Inc.
15 Simpson Street NW
Atlanta, Georgia 30308
706.395.1547

Kyle Webb
kwebb@landplanning.net

STRUCTURAL ENGINEER
Ksi Engineers
1455 Lincoln Parkway East
Atlanta, Georgia 30346
404.564.3642

Jessica McDonald
jmcdonald@ksise.com

HVAC & PLUMBING / FP
Johnson, Spellman & Associates, Inc.
6991 Peachtree Industrial Blvd, Bldg 700
Norcross GA 30092
770.447.4555

Shikeab Popal
678.336.5420
spopal@jsace.com

ELECTRICAL ENGINEER
Barnett Consulting Engineers
655 Engineering Drive #150
Norcross, Georgia 30092
404-382-9554

Leah Benincasa
leah.benincasa@bce-eng.com

LOW VOLTAGE / AV / SECURITY
J&A Engineering
4994 Lower Roswell Road, Suite One
Marietta, GA 30068
770-817-4220 Ext 201

Jorge Gomez
jgomez@jaengineering.net

PROJECT LOCATOR MAP

ROME TENNIS CENTER AT BERRY COLLEGE
751 ARMUCHEE CONNECTOR, NE
ROME, GEORGIA 30165

APPLICABLE CODES

INTERNATIONAL BUILDING CODE	2012 EDITION
ADA STANDARDS FOR ACCESSIBLE DESIGN	2010 EDITION
NFPA 101 LIFE-SAFETY CODE	2012 EDITION

NOTE: REFER TO CONSULTANT DRAWINGS / SPECIFICATIONS FOR CODES RELATIVE TO EACH OF THEIR DISCIPLINES

BUILDING LOCATION / IMPACTED COURTS

SCOPE NOTES / PROJECT DESCRIPTION

1. PROJECT ENTAILS THE CONSTRUCTION OF A PREMANUFACTURED METAL BUILDING TO HOUSE INDOOR TENNIS COURTS.
2. SIX COURTS AND ASSOCIATED SPECTATOR SEATING SHALL BE PROVIDED IN TOTAL AS INDICATED ON SHEET A2-1.0. TWO EXISTING COURTS (50 AND 51) ARE TO BE SALVAGED. ONE EXISTING COURT (52) SHALL BE PARTIALLY DEMOLISHED AS REQUIRED TO ACCOMMODATE NEW COURTS. CONTRACTOR IS RESPONSIBLE FOR PROTECTING COURTS AND MINIMIZING CUT/PATCH ASSOCIATED WIHT NEW WORK. REFER TO SPECIFICATION 02 41 00 FOR PROTECTIVE MEASURES REQUIRED.
3. REFER TO SPECIFICATION 01 10 00 FOR LIST OF ITEMS TO BE REMOVED BY OWNER PRIOR TO THE START OF CONSTRUCTION, ITEMS TO BE REMOVED BY CONTRACTOR AND STORED FOR REINSTALLATION, AND ITEMS TO BE REMOVED BY CONTRACTOR AND TURNED OVER TO OWNER.
4. OWNER INTENDS TO OCCUPY AND MAINTAIN USE OF ALL OTHER COURTS IN THE COMPLEX, AS WELL AS THE CLUBHOUSE, NORTH PAVILION, AND PARKING AREAS THROUGHOUT CONSTRUCTION. REFER TO SPECIFICATION 01 10 00.
5. SITE ACCESS TO BE FROM ARMUCHEE CONNECTOR. CONTRACTOR RESPONSIBLE FOR COORDINATING ACCESS AND PROVIDING TEMPORARY ROAD AND STAGING AREA. PLAN TO BE REVIEWED AND APPROVED BY OWNER.

BUILDING INFORMATION

51,063 GROSS SQUARE FEET

OCCUPANCY TYPE: A4

OCCUPANT LOAD: 360 SPECTATORS + 12 PER COURT = 432 TOTAL

CONSTRUCTION TYPE: TYPE IIB

FULLY SPRINKLERED PER NFPA 13

ABBREVIATIONS

AFF	ABOVE FINISH FLOOR
B.O.	BOTTOM OF
C.O.	CASED OPENING
CMU	CONCRETE MASONRY UNIT
C.J.	CONTROL JOINT
ELEV.	ELEVATION
EQ	EQUAL
EX	EXISTING
F.E.	FIRE EXTINGUISHER
F.F.	FINISH FACE
GWB	GYPSUM WALLBOARD
HM	HOLLOW METAL
MAX.	MAXIUMUM
MIN.	MINIMUM
NA	NOT APPLICABLE
N.I.C.	NOT IN CONTRACT
O.C.	ON CENTER
O.P.C.I.	OWNER PROVIDED CONTRACTOR INSTALLED
O.H.	OPPOSITE HAND
R.O.	ROUGH OPENING
SF	SQUARE FEET
SIM.	SIMILAR
T.O.	TOP OF
TYP.	TYPICAL
U.N.O.	UNLESS NOTED OTHERWISE
V.I.F.	VERIFY IN FIELD
W/	WITH

SYMBOLS LEGEND

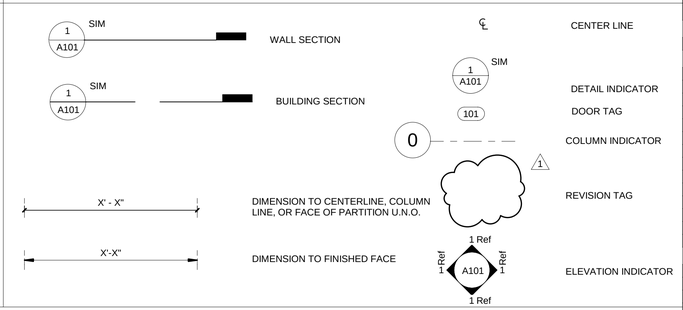

LIFE-SAFETY PLAN

XXX DOOR EXIT CAPACITY

TRAVEL DISTANCE TO EXIT

TIP-N-ROLL BLEACHER SEATING

3- HOUR RATED END WALL FOR REQUIRED SEPARATION AT PAVILION

NOTES:

1. REFER TO SHEET E3-1.0 FOR EXIT SIGN AND EMERGENCY LIGHT LOCATIONS
2. REFER TO SHEET E4-2.0 FOR STROBE AND PULL STATION LOCATIONS

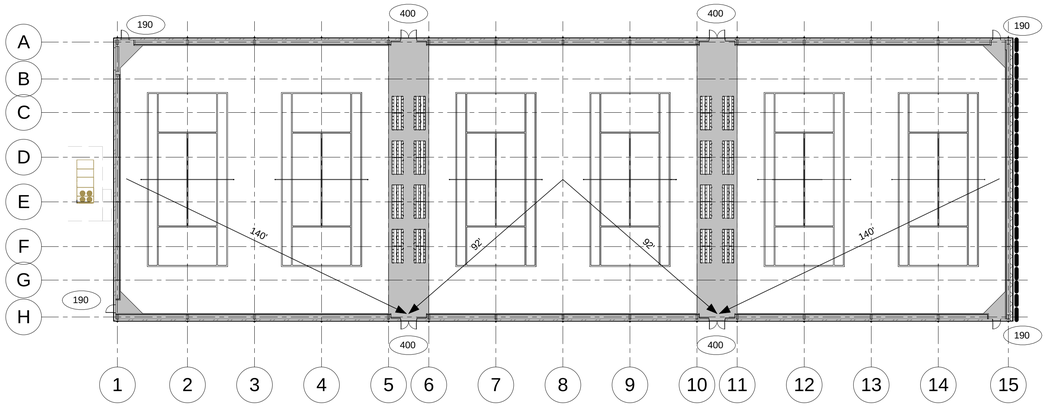

DRAWING LIST

SHEET NUMBER	SHEET NAME
00 GENERAL	
A0	COVER
01 CIVIL	
C000	SITE WORK COVER SHEET
C001	SURVEY
C100	DEMOLITION & REMOVAL PLAN
C200	LAYOUT & PAVING PLAN
C300	GRADING & DRAINAGE PLAN
C400	ES&PC NOTES
C401	ES&PC NOTES
C410	INITIAL ES&PC PLAN
C420	INTERMEDIATE ES&PC PLAN
C430	FINAL ES&PC PLAN
C500	SITE UTILITY PLAN
C700	SITE WORK CONSTRUCTION DETAILS
C701	SITE WORK CONSTRUCTION DETAILS
C702	SITE WORK CONSTRUCTION DETAILS
02 STRUCTURAL	
S001	STRUCTURAL ABBREVIATIONS, SYMBOLS, AND LEGENDS
S002	GENERAL NOTES
S003	GENERAL NOTES
S101A	FOUNDATION PLAN - PART A
S101B	FOUNDATION PLAN - PART B
S301	SECTIONS AND DETAILS
03 ARCHITECTURAL	
A2-1.0	FLOOR PLAN
A2-1.R	REFLECTED CEILING PLAN
A3-1.0	EXTERIOR ELEVATIONS
A3-2.0	OVERALL SECTIONS & ELEVATIONS
A5-1.0	TYPICAL DETAILS
A5-1.1	TYPICAL DETAILS
04 MECHANICAL	
M001	LEGEND, SCHEDULES & GENERAL NOTES
M201	FIRST LEVEL HVAC PLAN
M301	HVAC SECTIONS
05 ELECTRICAL	
E0-0.0	DRAWING INDEX, ABBREVIATIONS, & ANNOTATIONS
E0-0.1	SYMBOLS LEGEND & KEY PLANS
E0-1.0	ELECTRICAL SITE PLAN - POWER DEMOLITION
E0-1.1	ELECTRICAL SITE PLAN - POWER
E1-1.0	ELECTRICAL ONE-LINE DIAGRAM
E2-1.0	FLOOR PLAN - POWER
E3-1.0	FLOOR PLAN - LIGHTING
E3-1.1	SPORTS LIGHTING PHOTOMETRICS
E4-1.0	FLOOR PLAN - FIRE ALARM
E9-0.1	PANEL SCHEDULES
E9-0.2	PANEL SCHEDULES
E9-3.1	SCHEDULES & DETAILS - LIGHTING
07 AUDIO/VISUAL	
AV-000	COVER SHEET & LEGENDS
AV-201.1	GROUND LEVEL FLOOR PLAN - SECTION A
AV-201.2	GROUND LEVEL FLOOR PLAN - SECTION B
AV-301	ONE-LINE WIRING DIAGRAM
08 LOW VOLTAGE	
LV-000	COVER PAGE
LV-101	SITE PLAN
LV-201.1	GROUND LEVEL FLOOR PLAN SECTION A
LV-201.2	GROUND LEVEL FLOOR PLAN - SECTION B
LV-401	ONE-LINE DIAGRAM - DATA & VOICE
LV-402	ONE-LINE DIAGRAM - ACCESS CONTROL & INTRUSION
LV-403	ONE-LINE DIAGRAM VIDEO SURVEILLANCE
LV-501	DETAILS
LV-502	DETAILS

Menefee Architecture | Architecture Planning Design
1075 Brady Ave NW Atlanta GA 30318 | t 404.876.1011

COPYRIGHT

This drawing and all reproductions are copyrighted and the property of Menefee Architecture LLC and may not be used in any way without their permission.

COPYRIGHT 2018

ROME TENNIS - INDOOR COURTS

Rome, Georgia

DRAWN BY	CHECKED BY
JTG/JLG	TM

DATE
2019-02-15

REVISIONS	
NUMBER	DATE

TITLE
COVER

PROJECT NUMBER
201811

SHEET NUMBER
A0

75% CONSTRUCTION DOCUMENTS 2 / 15 / 2019

SITE WORK CONSTRUCTION DRAWINGS

FOR:

ROME TENNIS INDOOR FACILITY

100 MATCHPOINT WAY
ROME, GA 30165

VICINITY / LOCATION MAP (N.T.S.) (10)

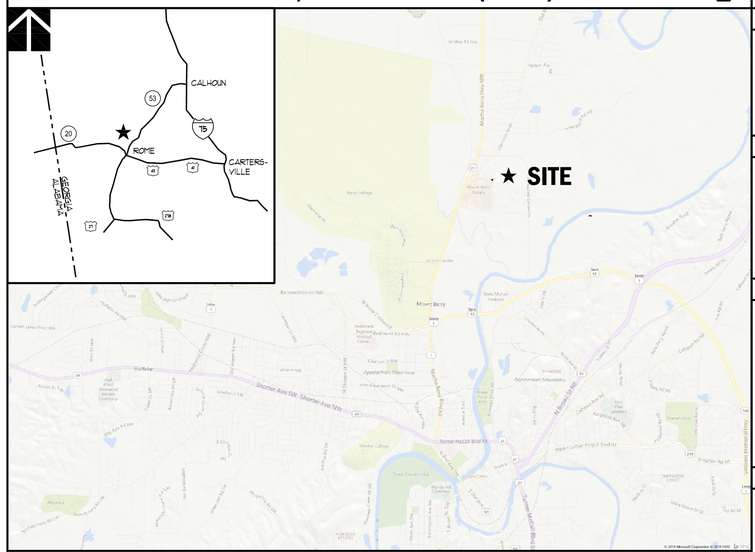

THERE ARE WETLANDS LOCATED ON OR WITHIN 200' OF THIS SITE.
THERE ARE STATE WATERS LOCATED WITHIN 200' OF THIS SITE. (12)

F.E.M.A. FLOODPLAIN MAP

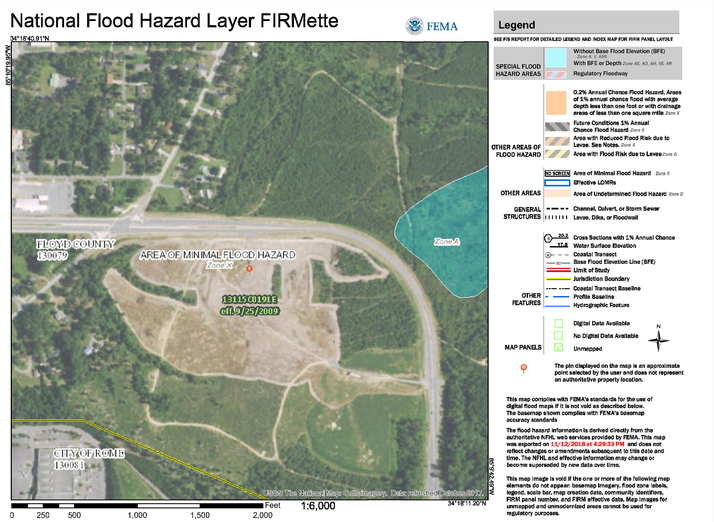

SITE PLAN LEGENDS

LAYOUT & STAKING

- COORDINATE POINT
- P.O.B. POINT OF BEGINNING
- DETAIL REFERENCE (DETAIL# / SHEET#)
- HANDRAIL AND/OR GUARDRAIL
- G.D.O.T. TYPE 400 VEHICULAR GUARDRAIL

PAVEMENT MARKINGS

- PARKING ARROW - STRAIGHT, WHITE
- PARKING ARROW - TURN, WHITE
- PAINTED CROSSWALK - WHITE
- ADA PARKING ACCESS AISLE - BLUE
- PAINTED WORD "STOP" - WHITE
- PAINTED WORD "ONLY" - WHITE

SIGNAGE

- SIGN
- STOP SIGN - MUTCD STANDARD R1-1
- YIELD SIGN - MUTCD STANDARD R1-2
- NO PARKING SIGN - MUTCD STANDARD R8-3a
- DO NOT ENTER SIGN - MUTCD STANDARD R5-1
- ONE WAY SIGN - MUTCD STANDARD R6-2

SITE GRADING

- 52 PROPOSED INTERMEDIATE CONTOURS
- 55 PROPOSED INDEX CONTOURS
- +505 SPOT ELEVATION
- >>>>>>> BERM
- +H.P. HIGH POINT
- +L.P. LOW POINT
- FLOW DIRECTION
- 6 SWALE
- 2:1 SLOPE INDICATOR (H:V)
- +TW 505 FINISHED GRADE AT TOP OF WALL
- +BW 505 FINISHED GRADE AT BOTTOM OF WALL
- +TC 505 TOP OF CURB ELEVATION

SITE UTILITIES

- W DOMESTIC WATER
- F FIRE MAIN
- FH FIRE HYDRANT
- FDC FIRE DEPARTMENT CONNECTION
- PIV POST INDICATOR VALVE
- TB CONCRETE THRUST BLOCKING
- WV WATER VALVE
- SS GRAVITY SANITARY SEWER

GENERAL

- TP TREE PROTECTION FENCE
- LOC LIMITS OF CONSTRUCTION
- EXISTING TREE TO BE REMOVED

STORM DRAINAGE

A1	STORM STRUCTURE LABEL
HW	HEADWALL
FES	FLARED END SECTION - GDOT STANDARD 1122
SES	SAFETY END SECTION - GDOT STANDARD 1122
CB	CATCH BASIN / GRATE INLET
JB	JUNCTION BOX
DI (PED. TOP)	DROP INLET - PEDESTAL TOP
CI (1018a)	CURB INLET - GDOT STANDARD 1018a W/ TYPE 'E' HOOD
SUCB	SINGLE-WING CATCH BASIN - GDOT STANDARD 1033D
DUCB	DOUBLE-WING CATCH BASIN - GDOT STANDARD 1034D
OCS/WB	OUTLET CONTROL STRUCTURE
TOP	TOP OF STRUCTURE ELEVATION
TH.	THROAT OF STRUCTURE ELEVATION
HDPE	HIGH-DENSITY POLYETHYLENE PIPE
AST2	ALUMINIZED STEEL TYPE 2 PIPE
AST2-SB	AST2 SPIRAL RIB CMP (MANNING'S n=0.012, ULTRALOW (TM) OR APPROVED EQUAL
DIP	DUCTILE IRON PIPE
RCP	REINFORCED CONCRETE PIPE (CLASS IV OR V) W/ RUBBER O-RING GASKET
PVC	POLYVINYL CHLORIDE PIPE (SCHEDULE 40)
INV. IN	INVERT ELEVATION - IN
INV. OUT	INVERT ELEVATION - OUT
HGL	HYDRAULIC GRADE LINE

GENERAL NOTES

ACCESS TO ALL BUILDINGS DURING CONSTRUCTION SHALL BE MAINTAINED AND OPEN TO EMERGENCY VEHICLES AT ALL TIMES, THROUGH THE USE OF EXISTING OR TEMPORARY ROADS, DRIVES, AND/OR WALKS.

BARRICADES, SUFFICIENT LIGHTS, SIGNS, AND OTHER TRAFFIC CONTROL MEASURES AS DEEMED NECESSARY FOR THE PROTECTION AND SAFETY OF THE PUBLIC SHALL BE PROVIDED AND MAINTAINED THROUGHOUT CONSTRUCTION ON CITY OF ROME ROADS.

CUT AND FILL SLOPES SHALL NOT EXCEED 2H : 1V.

ALL SPOT ELEVATIONS IN PARKING AREAS ARE AT THE BASE OF THE FACE OF CURB, UNLESS NOTED OTHERWISE.

CONTRACTOR SHALL STAKE ALL BUILDING CORNERS AND HAVE APPROVAL FROM THE ARCHITECT BEFORE COMMENCING THE CONSTRUCTION OF ANY FOOTINGS.

ALL CONSTRUCTION SHALL MEET OR EXCEED THE MINIMUM STANDARDS OF CITY OF ROME.

ANY DISCREPANCY BETWEEN THIS SHEET AND OTHERS IN THIS SET SHALL BE REFERRED TO THE ARCHITECT BY THE CONTRACTOR FOR CLARIFICATION BEFORE PROCEEDING WITH THE WORK.

CONTRACTOR SHALL VERIFY ALL BENCHMARKS BEFORE BEGINNING ANY WORK.

TREE SAVE AREA(S) SHALL BE PROTECTED BY THE CONTRACTOR.

CONTRACTOR SHALL BE RESPONSIBLE TO REMOVE ALL TREES WITHIN THE PARKING AREAS AND ALL OTHER AREAS TO GRADED.

ALL STORM PIPE AND STORM STRUCTURES SHALL BE IN ACCORDANCE WITH CITY OF ROME STANDARDS AND SPECIFICATIONS.

EROSION AND SEDIMENTATION CONTROL MEASURES SHALL BE MAINTAINED AT ALL TIMES. ADDITIONAL EROSION AND SEDIMENTATION CONTROL STRUCTURES SHALL BE INSTALLED IF DEEMED NECESSARY, BY ON-SITE INSPECTION.

DISTURBED AREAS SHALL BE GRASSED, WITH TEMPORARY VEGETATIVE COVER AS PER THE TECHNICAL SPECIFICATIONS, AS SOON AS THE CONSTRUCTION PHASE PERMITS.

CONTRACTOR SHALL VERIFY ALL DIMENSIONS AND GRADES.

ALL GRADES SHOWN ARE FINISHED GRADES.

ALL PERIMETER SILT BARRIERS SHALL BE INSTALLED PRIOR TO ANY GRADING ACTIVITY. CONTRACTOR SHALL INSTALL ALL REMAINING SILT BARRIERS AT THE EARLIEST OPPORTUNITY PERMITTED BY THE CONSTRUCTION PHASE. CONTRACTOR SHALL INSPECT AND REPAIR OR REPLACE ANY DAMAGED PORTION OF EACH SILT BARRIER DAILY. CONTRACTOR SHALL REMOVE ACCUMULATED DEPOSITS OF SILT AND SPREAD OVER SITE. CONTRACTOR SHALL REMOVE SILT BARRIERS WHEN GRADING IS COMPLETE AND ALL DISTURBED AREAS HAVE BEEN STABILIZED.

ALL STORM STRUCTURES SHALL HAVE A TEMPORARY SEDIMENT TRAP AS PER DETAIL, INSTALLED THE DAY OF INSTALLATION OF SAID STRUCTURE.

CONTRACTOR SHALL REMOVE ACCUMULATED SEDIMENT IN DETENTION BASIN(S) AT A TIME IN WHICH THE ACCUMULATION REACHES EIGHTEEN (18) INCHES AND AT THE END OF CONSTRUCTION, ONLY WHEN ALL DISTURBED AREAS HAVE BEEN FULLY STABILIZED THROUGH PERMANENT VEGETATION OR PAVING.

ALL BUFFERS AND TREE SAVE AREAS SHALL BE CLEARLY MARKED AND IDENTIFIED BY FLAGGING AND/OR FENCING PRIOR TO COMMENCEMENT OF ANY LAND DISTURBANCE.

SIGNS (LOCATION, NUMBER, AND SIZE) ARE NOT APPROVED UNDER THIS DEVELOPMENT PERMIT. A SEPARATE PERMIT IS REQUIRED FOR EACH SIGN.

DO NOT BREAK OR DUPLICATE

1. DO NOT DUPLICATE DRAWINGS WITHOUT PERMISSION.
2. READ THE SPECIFICATIONS. THIS SET OF DRAWINGS AND SPECIFICATIONS DEFINE PROJECT SCOPE AND CONTRACT REQUIREMENTS. INDIVIDUAL SHEETS SEPARATED FROM THE SET MAY NOT ADEQUATELY REFLECT ALL INFORMATION NEEDED TO SUITABLY COVER CERTAIN ITEMS. DO NOT SEPARATE THIS SET OF DRAWINGS INTO INDIVIDUAL SHEETS.

CALL BEFORE YOU DIG

GEORGIA811
www.Georgia811.com

GEORGIA LAW MANDATES THAT, BEFORE BEGINNING ANY MECHANIZED DIGGING OR EXCAVATION WORK, YOU MUST CONTACT GEORGIA 811 BY USING EREQUEST ON WWW.GEORGIA811.COM OR BY CALLING 811 OR 1-800-282-7411 AT LEAST 48 HOURS BUT NO MORE THAN 10 WORKING DAYS IN ADVANCE TO HAVE UTILITY LINES MARKED.

PROJECT DATA (6) (7)

PROJECT ADDRESS:	100 MATCH POINT WAY ROME, GA 30165
TAX PARCELS:	J21W-001A
LAND LOTS:	LAND LOTS 115, 116, & 125 OF THE 23RD DISTRICT
ZONING:	XXX
BUILDING SETBACKS:	
MINIMUM FRONT SETBACK:	-
MINIMUM REAR SETBACK:	-
MINIMUM SIDE SETBACK:	-
MAXIMUM BUILDING HEIGHT:	-
EXISTING USE:	TENNIS FACILITY
PROPOSED USE:	ADDED INDOOR TENNIS FACILITY
TOTAL AREA OF SITE:	45.69 ACRES
DISTURBED AREA:	2.70 ACRES
IMPERVIOUS AREA:	TBD ACRES
IMPERVIOUS (% OF SITE):	TBD%
LOCAL ISSUING AUTHORITY:	CITY OF ROME (LDIP)
PERMIT NUMBER:	T.B.D.
SEWER AUTHORITY:	FLOYD COUNTY
PERMIT NUMBER:	T.B.D.
WATER AUTHORITY:	FLOYD COUNTY
PERMIT NUMBER:	T.B.D.
NPDES PERMIT REQUIRED:	YES (MORE THAN 1 ACRE OF DISTURBANCE
FEES TO EPD:	400.00 (40 PER DISTURBED ACRE)
FEES TO CITY OF ROME:	400.00 (40 PER DISTURBED ACRE)
CONSTRUCTION EXIT COORDINATES:	33.796584, -84.238835

CIVIL SHEET INDEX

#	SHEET #	SHEET NAME
1	C000	SITE WORK COVER SHEET
2	C001	PARTIAL TOPOGRAPHIC, TREE, & UNDERGROUND UTILITY SURVEY
4	C100	DEMOLITION & REMOVAL PLAN
5	C200	LAYOUT & PAVING PLAN
6	C300	GRADING & DRAINAGE PLAN
9	C400	ES&PC NOTES
10	C401	ES&PC NOTES
11	C410	INITIAL ES&PC PLAN
12	C420	INTERMEDIATE ES&PC PLAN
13	C430	FINAL ES&PC PLAN
14	C500	SITE UTILITY PLAN
16	C700	SITE WORK CONSTRUCTION DETAILS
17	C701	SITE WORK CONSTRUCTION DETAILS
18	C702	SITE WORK CONSTRUCTION DETAILS

24-HOUR CONTACT (5)

NAME: TOM LAURENCE
COMPANY / ASSOCIATION: COLLINS PROJECT MANAGEMENT
EMAIL ADDRESS: TLAURENCE @ COLLINSPM . COM
PHONE NUMBER: 678-367-4907

PROJECT CONTACTS (5)

JOB NAME: ROME TENNIS INDOOR FACILITY
BLP JOB No. : 18014
OWNER/PRIMARY PERMITTEE:
NAME: ROME TENNIS CENTER
ADDRESS: 100 MATCH-POINT WAY
CITY, ST, ZIP: ROME, GA 30165
CONTACT: TOM DAGLIS, EXECUTIVE DIRECTOR
PHONE: 706-236-4487
EMAIL: TDAGLIS@ROMETENNISCENTER.COM
PROGRAM MANAGER:
NAME: COLLINS PROJECT MANAGEMENT
ADDRESS: 45 TECHNOLOGY PKWY S #130
CITY, ST, ZIP: PEACHTREE CORNERS, GA 30092
CONTACT: TOM LAURENCE
PHONE: 678-367-4907
EMAIL: TLAURENCE@COLLINSPM.COM
ARCHITECT:
NAME: MENEFEE ARCHITECTURE
ADDRESS: 1075 BRADY AVENUE NW
CITY, ST, ZIP: ATLANTA, GA 30318
CONTACT: TONY MENEFEE, AIA
PHONE: 404-876-1011 X 117
EMAIL: TONY@MENEFEEARCHITECTURE.COM
SITE DESIGN PROFESSIONAL:
NAME: BREEDLOVE LAND PLANNING, INC.
ADDRESS: 15 SIMPSON STREET NW
CITY, ST, ZIP: ATLANTA, GA 30308
CONTACT: KYLE LEBB, P.E.
PHONE: 770-483-1173
EMAIL: KLEBB@LANDPLANNING.NET
BOUNDARY AND TOPOGRAPHIC INFORMATION PREPARED BY:
NAME: AARON CARROLL, RLS, P.E.
ADDRESS: 200 VAUGHN ROAD PO BOX 1433
CITY, ST, ZIP: ROME, GA 30161
CONTACT: AARON CARROLL
PHONE: 706-378-3846
EMAIL: ACARROLL@MOSEGAUS
DATED: DECEMBER 1, 2018

BREEDLOVE LAND PLANNING
Landscape Architects • Civil Engineers
www.landplanning.net

CONSTRUCTION SCHEDULE (28)

NOTE: THE ABOVE CONSTRUCTION SCHEDULE IS APPROXIMATE AND DOES NOT RELIEVE THE CONTRACTOR FROM MEETING DEADLINES OR MILESTONES DEFINED IN THE CONSTRUCTION CONTRACT

Menefee Architecture | Architecture Planning Design
1075 Brady Ave NW Atlanta GA 30318 | t 404.876.1011

GEORGIA REGISTERED No. PE036701 PROFESSIONAL ENGINEER KYLE WATSON WEBB

COPYRIGHT

This drawing and all reproductions copyrighted and the property of Menefee Architecture LLC and may not be used in any without their permission.

COPYRIGHT 2018

ROME TENNIS INDOOR FACILITY
Rome, Georgia

DRAWN BY	CHECKED BY
BAM	KWW

DATE
2019-02-15

REVISIONS	
NUMBER	DATE

TITLE
SITE WORK COVER SHEET

PROJECT NUMBER
201811

SHEET NUMBER
C000

75% CONSTRUCTION DOCUMENTS 2/15/2019

LEGEND:

P.L. - DENOTES PROPERTY LINE
R/W - DENOTES RIGHT-OF-WAY
CMF - DENOTES CONCRETE MONUMENT FOUND
HTF - DENOTES HOLLOW TOP PIPE FOUND
RBC - DENOTES 5/8-INCH REBAR w/PLASTIC I.D. CAP SET
L. L. LINE - DENOTES LAND LOT LINE
FES - DENOTES FLARED END SECTION
DYL - DENOTES DOUBLE YELLOW LINE
SWL - DENOTES SINGLE WHITE LINE
WSL - DENOTES WHITE SKIP LINE
EP - DENOTES EDGE OF PAVING
FH - DENOTES FIRE HYDRANT
W/IV - DENOTES "WITH ISOLATION VALVE"
WV - DENOTES WATER VALVE
IN / OUT - DENOTES AREAS INSIDE OR OUTSIDE EXISTING CITY LIMITS
ELA - DENOTES END LIMITED ACCESS
BLA - DENOTES BEGIN LIMITED ACCESS
SSCO - SANITARY SEWER CLEANOUT
P POLE - POWER/UTILITY POLE
——G—— - GAS LINE
——W—— - WATER LINE
—OHP&T— - OVERHEAD POWER & TELEPHONE LINES
——S—— - SANITARY SEWER

EXISTING STORM DRAINAGE TABLE

STRUCTURE	RIM/TOP	INVERT	STRUCTURE	IRONWORK
HW#1		629.03'	RCP	NONE
YI#1	636.45'	629.12 out	48" PRECAST	24x24 GRATE
YI#1	636.45'	629.64 in YI#2	48" PRECAST	24x24 GRATE
YI#1	636.45'	629.32 in YI#5	48" PRECAST	24x24 GRATE
YI#2	636.15'	630.15'	P.V.C.	15x15 GRATE
YI#3	636.20'	630.50'	P.V.C.	15x15 GRATE
YI#4	636.20'	631.10'	P.V.C.	15x15 GRATE
YI#6	636.70'	630.38 out	P.V.C.	15x15 GRATE
YI#5	636.70'	630.59 in YI#6	P.V.C.	15x15 GRATE
YI#6	637.72'	631.61'	P.V.C.	15x15 GRATE
YI#7	639.13'	632.83'	P.V.C.	15x15 GRATE
YI#8	640.00'	633.60'	P.V.C.	15x15 GRATE
YI#9	640.65'	634.03'	P.V.C.	15x15 GRATE
YI#10	641.35'	634.77'	P.V.C.	15x15 GRATE
YI#11	640.55'	635.12'	P.V.C.	15x15 GRATE
YI#12	640.68'	635.50'	P.V.C.	15x15 GRATE
YI#13	640.61'	634.92'	P.V.C.	15x15 GRATE
YI#14	641.30'	635.30'	P.V.C.	15x15 GRATE
YI#15	638.67'	632.77'	P.V.C.	15x15 GRATE
YI#16	638.59'	632.66'	P.V.C.	15x15 GRATE
YI#17	639.32'	632.95'	P.V.C.	15x15 GRATE
YI#18	638.47'	633.39'	P.V.C.	15x15 GRATE
YI#19	643.91'	637.85'	P.V.C.	15x15 GRATE

EXISTING SANITARY SEWER MANHOLE TABLE

STRUCTURE	RIM	INVERT
SS MH#1	615.13'	609.98'
SS MH#2	616.19'	610.79'
SS MH#3	622.91'	614.66'
SS MH#4	637.07'	623.17'
SS MH#5	640.67'	626.32'
SS MH#6	645.26'	628.66'

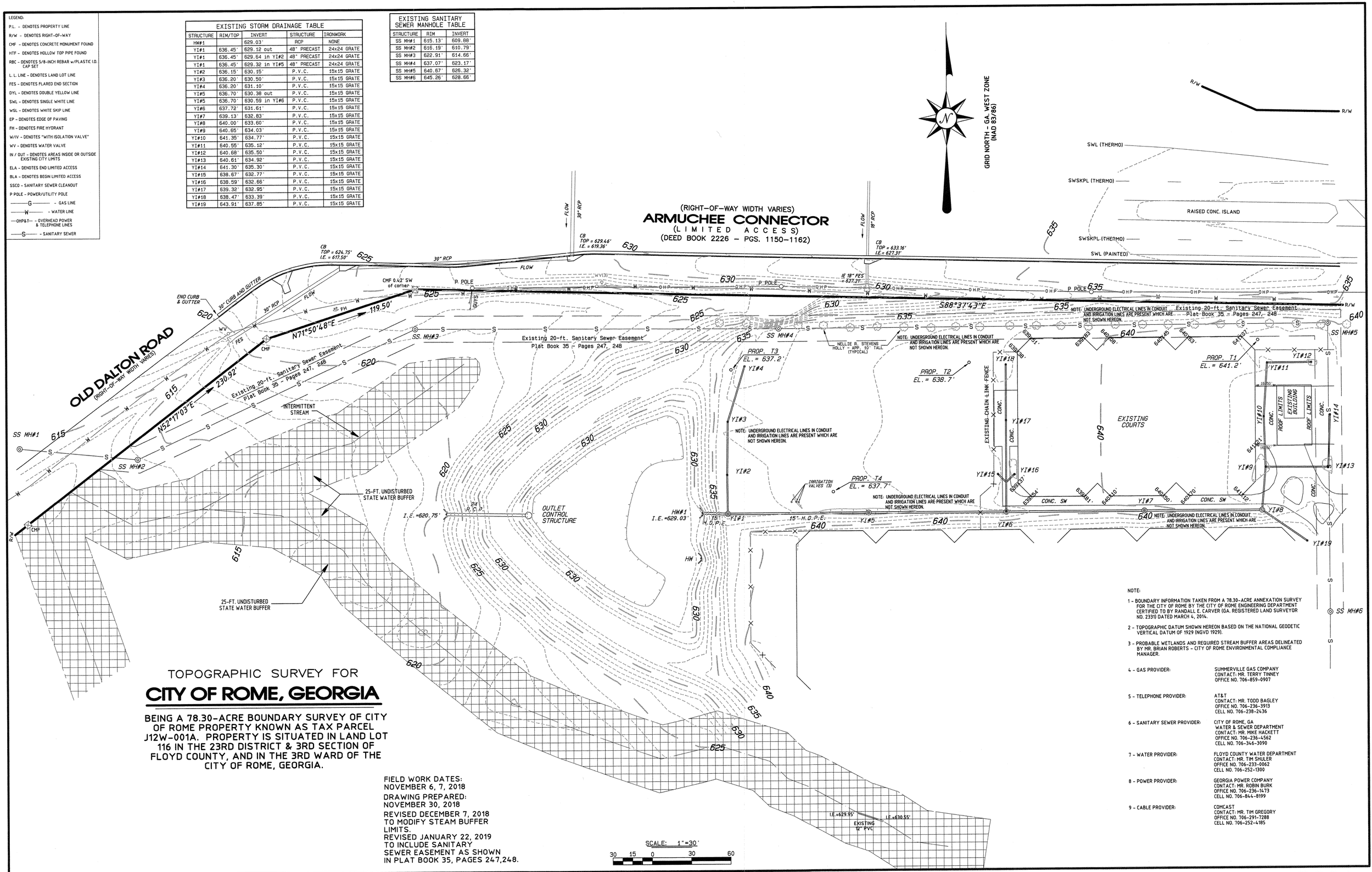

TOPOGRAPHIC SURVEY FOR

CITY OF ROME, GEORGIA

BEING A 78.30-ACRE BOUNDARY SURVEY OF CITY OF ROME PROPERTY KNOWN AS TAX PARCEL J12W-001A. PROPERTY IS SITUATED IN LAND LOT 116 IN THE 23RD DISTRICT & 3RD SECTION OF FLOYD COUNTY, AND IN THE 3RD WARD OF THE CITY OF ROME, GEORGIA.

FIELD WORK DATES:
NOVEMBER 6, 7, 2018

DRAWING PREPARED:
NOVEMBER 30, 2018

REVISED DECEMBER 7, 2018
TO MODIFY STEAM BUFFER LIMITS.
REVISED JANUARY 22, 2019
TO INCLUDE SANITARY SEWER EASEMENT AS SHOWN IN PLAT BOOK 35, PAGES 247,248.

NOTE:

1 - BOUNDARY INFORMATION TAKEN FROM A 78.30-ACRE ANNEXATION SURVEY FOR THE CITY OF ROME BY THE CITY OF ROME ENGINEERING DEPARTMENT CERTIFIED TO BY RANDALL E. CARVER (GA. REGISTERED LAND SURVEYOR NO. 2331) DATED MARCH 4, 2014.

2 - TOPOGRAPHIC DATUM SHOWN HEREON BASED ON THE NATIONAL GEODETIC VERTICAL DATUM OF 1929 (NGVD 1929).

3 - PROBABLE WETLANDS AND REQUIRED STREAM BUFFER AREAS DELINEATED BY MR. BRIAN ROBERTS - CITY OF ROME ENVIRONMENTAL COMPLIANCE MANAGER.

4 - GAS PROVIDER:	SUMMERVILLE GAS COMPANY CONTACT: MR. TERRY TINNEY OFFICE NO. 706-859-0907
5 - TELEPHONE PROVIDER:	AT&T CONTACT: MR. TODD BAGLEY OFFICE NO. 706-236-3913 CELL NO. 706-238-2436
6 - SANITARY SEWER PROVIDER:	CITY OF ROME, GA WATER & SEWER DEPARTMENT CONTACT: MR. MIKE HACKETT OFFICE NO. 706-236-4562 CELL NO. 706-346-3090
7 - WATER PROVIDER:	FLOYD COUNTY WATER DEPARTMENT CONTACT: MR. TIM SHULER OFFICE NO. 706-233-0062 CELL NO. 706-252-1300
8 - POWER PROVIDER:	GEORGIA POWER COMPANY CONTACT: MR. ROBIN BURK OFFICE NO. 706-236-1473 CELL NO. 706-844-8199
9 - CABLE PROVIDER:	COMCAST CONTACT: MR. TIM GREGORY OFFICE NO. 706-291-7288 CELL NO. 706-252-4185

OWNER TO REMOVE SCOREBOARDS, UMPIRE CHAIRS, BENCHES, SIGNAGE, NETS AND POSTS. THE CONTRACTOR IS TO RE-INSTALL NETS/POSTS AT COURTS 50 AND 51, AND TO INSTALL THE SCOREBOARDS IN THE NEW BLDG.

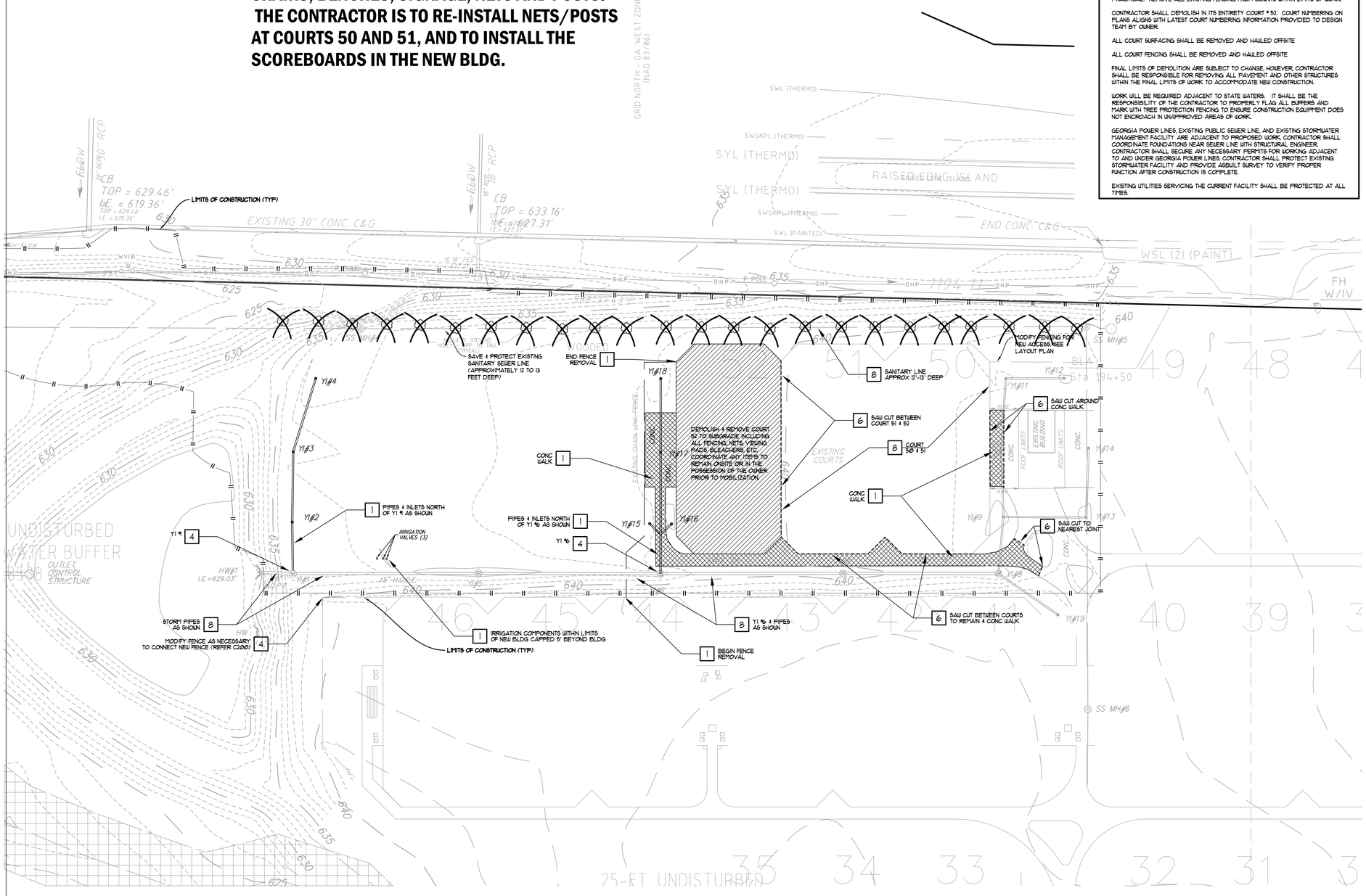

DEMOLITION NARRATIVE

THIS PROJECT PROPOSES THE DEMOLITION OF ONE COURT (#52) AND REUSE OF TWO COURTS (#50 AND #51). SURROUNDING WALKS IN CONFLICT WITH NEW BUILDING FOOTPRINT AND FOUNDATIONS SHALL BE SAWCUT TO NEAREST JOINT AND REMOVED. EXISTING COURTS TO BE REUSED SHALL BE SAVED TO THE GREATEST EXTENT PRACTICAL. REMOVE ALL EXISTING FENCING FROM COURTS WITHIN LIMITS OF WORK.

CONTRACTOR SHALL DEMOLISH IN ITS ENTIRETY COURT # 52. COURT NUMBERING ON PLANS ALIGNS WITH LATEST COURT NUMBERING INFORMATION PROVIDED TO DESIGN TEAM BY OWNER.

ALL COURT SURFACING SHALL BE REMOVED AND HAULED OFFSITE

ALL COURT FENCING SHALL BE REMOVED AND HAULED OFFSITE

FINAL LIMITS OF DEMOLITION ARE SUBJECT TO CHANGE, HOUEVER, CONTRACTOR SHALL BE RESPONSIBLE FOR REMOVING ALL PAVEMENT AND OTHER STRUCTURES WITHIN THE FINAL LIMITS OF WORK TO ACCOMMODATE NEW CONSTRUCTION.

WORK WILL BE REQUIRED ADJACENT TO STATE WATERS. IT SHALL BE THE RESPONSIBILITY OF THE CONTRACTOR TO PROPERLY FLAG ALL BUFFERS AND MARK WITH TREE PROTECTION FENCING TO ENSURE CONSTRUCTION EQUIPMENT DOES NOT ENCROACH IN UNAPPROVED AREAS OF WORK.

GEORGIA POWER LINES, EXISTING PUBLIC SEWER LINE, AND EXISTING STORMWATER MANAGEMENT FACILITY ARE ADJACENT TO PROPOSED WORK. CONTRACTOR SHALL COORDINATE FOUNDATIONS NEAR SEWER LINE WITH STRUCTURAL ENGINEER. CONTRACTOR SHALL SECURE ANY NECESSARY PERMITS FOR WORKING ADJACENT TO AND UNDER GEORGIA POWER LINES. CONTRACTOR SHALL PROTECT EXISTING STORMWATER FACILITY AND PROVIDE ASBUILT SURVEY TO VERIFY PROPER FUNCTION AFTER CONSTRUCTION IS COMPLETE.

EXISTING UTILITIES SERVICING THE CURRENT FACILITY SHALL BE PROTECTED AT ALL TIMES.

GENERAL DEMOLITION NOTES

1. CONTRACTOR SHALL REFER TO PHASING SECTION OF THE SPECIFICATIONS. ALL DEMOLITION SHALL BE COORDINATED WITH PHASING.
2. WORK DONE AHEAD OF SEQUENCE OR FOR TEMPORARY PROVISIONS SHALL HAVE EXISTING DISTURBED SURFACES PATCHED TO MATCH ORIGINAL CONDITIONS UNTIL NEW CONSTRUCTION REPLACES SUCH REPAIRS OR MODIFICATIONS.
3. CONTRACTOR SHALL PROVIDE NECESSARY EROSION CONTROL MEASURES DURING THE DEMOLITION PHASE OF CONSTRUCTION.
4. CONTRACTOR IS RESPONSIBLE FOR PROPER DISPOSAL OF ALL ITEMS REMOVED FROM SITE. DISPOSAL SHALL COMPLY WITH ALL FEDERAL, STATE, AND LOCAL CODES. THERE SHALL BE NO ON-SITE BURIAL OF DEBRIS GENERATED FROM CONSTRUCTION ACTIVITIES.
5. UNLESS OTHERWISE NOTED, EXISTING ITEMS WITHIN THE PROJECT LIMITS WILL BE RETAINED IN PLACE AND PROTECTED FROM DAMAGE DURING THE CONSTRUCTION PERIOD. ANY FACILITIES THAT ARE DAMAGED WILL BE REPAIRED OR REPLACED BY THE CONTRACTOR AT HIS/HER EXPENSE.
6. CONTRACTOR SHALL SAVE & PROTECT ALL BUILDINGS, FOUNDATIONS, CANOPIES, FENCES, PLAY EQUIPMENT, ETC. ON THE PROPERTY, UNLESS OTHERWISE NOTED. DAMAGE SHALL BE REPAIRED/REPLACED BY THE CONTRACTOR AT NO COST TO THE OWNER.
7. CONTRACTOR SHALL SAVE AND PROTECT ALL EXISTING STORM DRAINAGE STRUCTURES UNLESS OTHERWISE NOTED.
8. CONTRACTOR SHALL BE RESPONSIBLE FOR REMOVAL OF ALL FENCING WITHIN LIMITS OF WORK UNLESS OTHERWISE NOTED.
9. CONTRACTOR SHALL COORDINATE WITH OWNER THE REMOVAL ANY EXISTING LANDSCAPE MATERIALS OR SITE FEATURES WHICH THE OWNER ELECTS TO RETAIN.
10. CONTRACTOR SHALL ACCOMPLISH DEMOLITION WITHIN THE DRIP-LINE OF EXISTING SPECIMEN TREES BY UTILIZING HAND LABOR PROCEDURES WITHOUT DAMAGING THE ROOT SYSTEM OF TREE.
11. CONTRACTOR SHALL BE RESPONSIBLE TO MAINTAIN SAFE, CLEARLY MARKED PEDESTRIAN ACCESS ROUTES TO ALL BUILDING ENTRANCES THROUGHOUT ALL PHASES OF CONSTRUCTION.
12. CONTRACTOR SHALL MAINTAIN POSITIVE DRAINAGE AWAY FROM BUILDINGS AT ALL TIMES.
13. LIMITS OF CURB AND GUTTER DEMOLITION ARE SUBJECT TO THE NEAREST CONSTRUCTION JOINT.
14. CURB AND GUTTER AND WALKS SHALL BE REPAIRED TO THE NEAREST CONSTRUCTION JOINT.
15. CONTRACTOR SHALL PROVIDE ABRASION SAW CUTS PRIOR TO DEMOLITION ADJACENT TO ALL PAVEMENT AREAS TO BE SAVED FAILURE TO PROVIDE A CLEAN EDGE MAY RESULT IN ADDITIONAL DEMOLITION AND NEW PAVEMENT INSTALLATION PAID FOR AND EXECUTED BY THE CONTRACTOR.
16. CONTRACTOR IS RESPONSIBLE FOR DEMOLITION AND REMOVAL OR RELOCATION (AT HIS/HER EXPENSE) OF EXISTING ITEMS THAT CONFLICT WITH NEW CONSTRUCTION UNLESS OTHERWISE NOTED.
17. CONTRACTOR SHALL BE RESPONSIBLE FOR THE DEMOLITION AND REMOVAL AND/OR RELOCATION OF ALL ITEMS WHERE NEW PAVING IS LOCATED.
18. CONTRACTOR SHALL REPAIR TO EXISTING CONDITIONS ANY PAVING OR SITE FEATURE DEMOLISHED OR DAMAGED DURING INSTALLATION OF NEW RAIN LEADERS, UTILITIES OR OTHER NEW SITE FEATURES.
19. CONTRACTOR SHALL RELOCATE OR ADJUST AS NECESSARY ALL EXISTING UTILITY APPURTENANCES (CLEAN OUTS, VALVE/METER BOXES AND/OR COVERS, MANHOLES, ETC.) LOCATED WITHIN THE LIMITS OF CONSTRUCTION TO FINISHED GRADE AT NO ADDITIONAL COST TO THE OWNER.
20. CONTRACTOR SHALL COORDINATE THE REMOVAL AND OR RELOCATION OF EXISTING GAS AND WATER METERS, VALVES, LINES, POWER, TELEPHONE AND CABLE LINES THAT SERVICE THE EXISTING BUILDINGS WITH THE APPROPRIATE UTILITY COMPANIES.
21. CONTRACTOR IS RESPONSIBLE FOR REPAIRING IMMEDIATELY ANY DAMAGE TO AN ACTIVE UTILITY.
22. REFER TO SITE UTILITY PLANS FOR RELOCATION, REMOVAL, ABANDONMENT, AND/OR MODIFICATION OF ALL EXISTING PLUMBING FEATURES ON SITE.

DEMOLITION LEGEND

- 1 — TO BE REMOVED BY THE CONTRACTOR OR AT THE CONTRACTORS EXPENSE
- 2 — TO BE REMOVED BY THE CONTRACTOR OR AT THE CONTRACTORS EXPENSE AND TURNED OVER TO THE OWNER FOR REUSE
- 3 — TO BE REMOVED BY OWNER
- 4 — RELOCATE AS NECESSARY (R.A.N.) AND/OR ADJUST AS NECESSARY AT THE CONTRACTORS EXPENSE
- 5 — TO BE REMOVED, RELOCATED, MODIFIED OR ADJUSTED BY OTHERS
- 6 — SAW CUT LINE
- 7 — TO BE REMOVED BY CONTRACTOR OR AT THE CONTRACTORS EXPENSE AND RETAINED FOR REUSE AT THIS SITE
- 8 — SAVE & PROTECT DURING CONSTRUCTION
- CONCRETE WALKS, CONCRETE STAIRS, CONCRETE RAMPS, OR OTHER CONC. PAVEMENT REMOVAL LIMITS (DEMOLISH & REMOVE PAVEMENTS TO SUBGRADE)
- ASPHALT PAVEMENT REMOVAL LIMITS (DEMOLISH & REMOVE PAVEMENTS TO SUBGRADE)
- GRAVEL REMOVAL LIMITS (DEMOLISH & REMOVE TO SUBGRADE)
- BUILDING STRUCTURE DEMOLITION LIMITS (CONTRACTOR SHALL COORDINATE DEMOLITION OF ALL BUILDING UTILITIES WITH ARCHITECT & MEP)
- CONCRETE CURB AND GUTTER REMOVAL (DEMOLISH AND REPAIR TO NEAREST CONSTRUCTION JOINT)
- LIMITS OF CONSTRUCTION ACTIVITY
- TREE REMOVAL AREA
- TREE SAVE AREA
- EXISTING TREE TO BE REMOVED

15 7.5 0 15 30 60 90
SCALE: 1"=30'-0"

DO NOT DUPLICATE DRAWINGS WITHOUT WRITTEN PERMISSION

CAUTION

THE UTILITIES SHOWN ARE SHOWN FOR THE CONTRACTOR'S CONVENIENCE ONLY. THERE MAY BE OTHER UTILITIES NOT SHOWN ON THESE PLANS. THE DESIGN PROFESSIONAL ASSUMES NO RESPONSIBILITY FOR THE LOCATIONS SHOWN AND IT SHALL BE THE CONTRACTOR'S RESPONSIBILITY TO VERIFY THE LOCATIONS OF UTILITIES WITHIN THE LIMITS OF THE WORK. DAMAGE TO EXISTING UTILITIES BY THE CONTRACTOR, FROM HIS/ HER OPERATIONS, SHALL BE THE SOLE RESPONSIBILITY OF THE CONTRACTOR.

811 Know what's **below.** Call before you dig. Dial 811 Or Call 800-282-7411

CONTRACTOR SHALL BE RESPONSIBLE TO SECURE THE SERVICES OF A PRIVATE UTILITY LOCATOR FIRM DURING THE ENTIRE COURSE OF CONSTRUCTION. CONTRACTOR SHALL PAY FOR SAID SERVICES. CONTRACTOR SHALL IMMEDIATELY REPAIR ALL UTILITIES DAMAGED BY CONSTRUCTION ACTIVITIES, AT NO ADDITIONAL COST TO THE OWNER.

CONTRACTOR SHALL BE RESPONSIBLE FOR COMPACTION OF BACKFILL OF ALL UTILITY TRENCHES WITHIN SITE WORK LIMITS. THIS INCLUDES TRENCHES DUG AND BACKFILLED BY LOCAL UTILITIES, SUCH AS POWER, GAS, TELEPHONE, ETC. CONTRACTOR SHALL PROVIDE ADDITIONAL BACKFILL AND COMPACTION AS NECESSARY, IF SETTLEMENT OCCURS.

BREEDLOVE LAND PLANNING
Landscape Architects • Civil Engineers
www.landplanning.net

Menefee Architecture | Architecture Planning Design
1075 Brady Ave NW Atlanta GA 30318 | t 404.876.1011

GEORGIA REGISTERED No. PE038701 PROFESSIONAL ENGINEER KYLE WATSON WEBB

COPYRIGHT

This drawing and all reproductions copyrighted and the property of Menefee Architecture LLC and may not be used in any without their permission.

COPYRIGHT 2018

ROME TENNIS INDOOR FACILITY

Rome, Georgia

DRAWN BY	CHECKED BY
BAM	KWW

DATE
2019-02-15

REVISIONS	
NUMBER	DATE

TITLE
DEMOLITION & REMOVAL PLAN

PROJECT NUMBER
201811

SHEET NUMBER
C100

75% CONSTRUCTION DOCUMENTS 2/15/2019

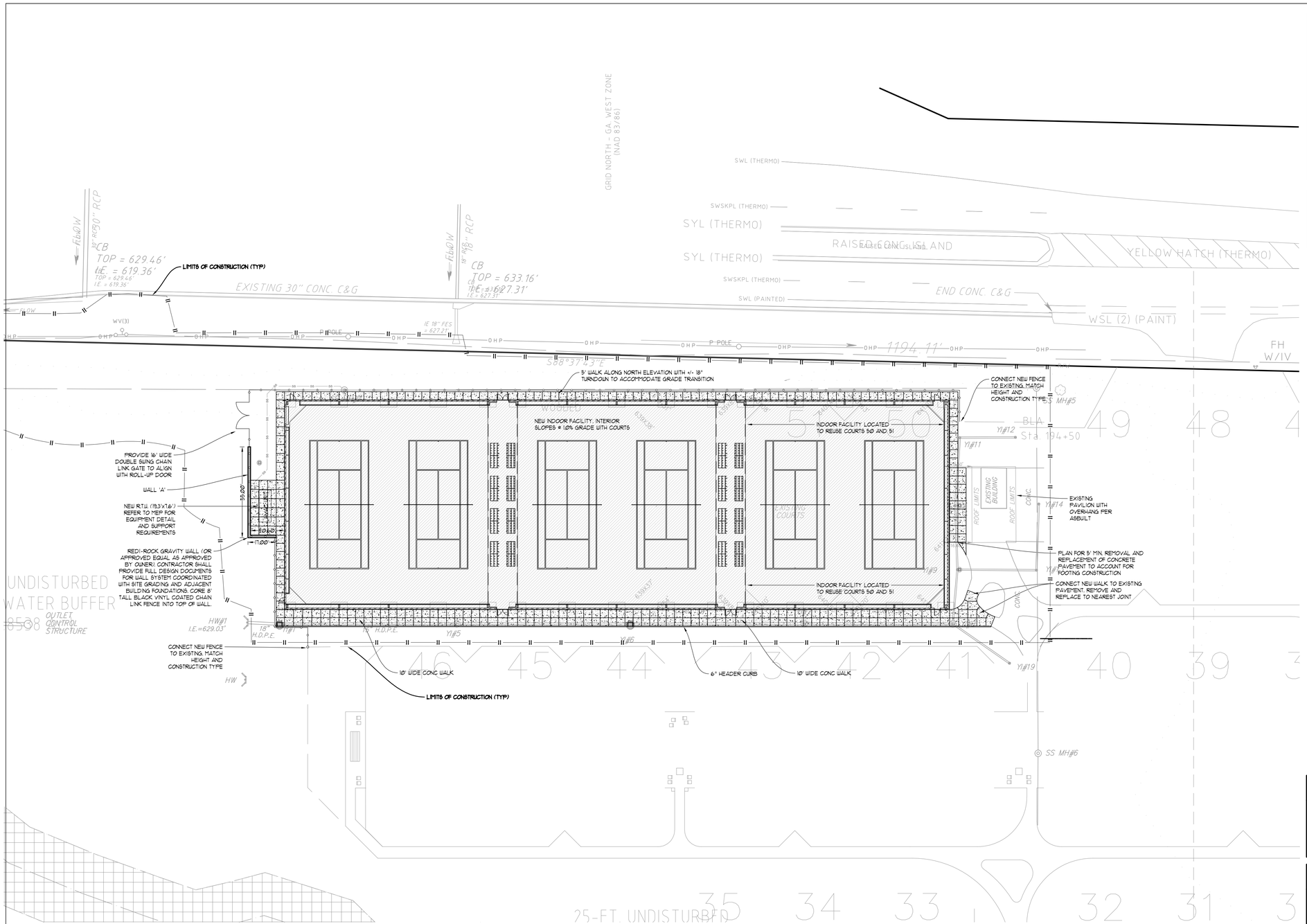

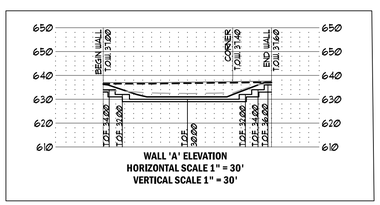

WALL 'A' ELEVATION
HORIZONTAL SCALE 1" = 30'
VERTICAL SCALE 1" = 30'

GENERAL LAYOUT NOTES

1. PROPOSED BUILDING USE: INDOOR TENNIS FACILITY (6 COURTS)
2. CONTRACTOR SHALL VERIFY CONDITIONS AND DIMENSIONS BEFORE PROCEEDING WITH CONSTRUCTION. ANY DISCREPANCIES FOUND SHALL BE REPORTED TO THE ARCHITECT FOR CLARIFICATION AND/OR CORRECTION BEFORE PROCEEDING WITH THE WORK. CONTRACTOR SHALL ASSUME RESPONSIBILITY FOR DISCREPANCIES WHICH ARE NOT REPORTED.
3. CONTRACTOR SHALL STAKE ALL BUILDING CORNERS AND OBTAIN ARCHITECTS APPROVAL BEFORE POURING ANY FOOTINGS.
4. REFER TO ARCHITECTURAL PLANS FOR ACTUAL BUILDING DIMENSIONS.
5. ALL DIMENSIONS ARE TO THE FACE OF CURBS AND FACE OF WALLS.
6. ALL ANGLES ARE 90° UNLESS OTHERWISE NOTED.
7. CURB AND GUTTER RADII ARE 5' UNLESS OTHERWISE NOTED.

PAVING LEGEND

CONCRETE WALK

DO NOT BREAK OR DUPLICATE

1. DO NOT DUPLICATE DRAWINGS WITHOUT PERMISSION.
2. READ THE SPECIFICATIONS. THIS SET OF DRAWINGS AND SPECIFICATIONS DEFINE PROJECT SCOPE AND CONTRACT REQUIREMENTS. INDIVIDUAL SHEETS SEPARATED FROM THE SET MAY NOT ADEQUATELY REFLECT ALL INFORMATION NEEDED TO SUITABLY COVER CERTAIN ITEMS. DO NO SEPARATE THIS SET OF DRAWINGS INTO INDIVIDUAL SHEETS.

CALL BEFORE YOU DIG

GEORGIA811
www.Georgia811.com

GEORGIA LAW MANDATES THAT, BEFORE BEGINNING ANY MECHANIZED DIGGING OR EXCAVATION WORK, YOU MUST CONTACT GEORGIA 811 BY USING EREQUEST ON WWW.GEORGIA811.COM OR BY CALLING 811 OR 1-800-282-7411 AT LEAST 48 HOURS BUT NO MORE THAN 10 WORKING DAYS IN ADVANCE TO HAVE UTILITY LINES MARKED.

GRAPHIC SCALE & ORIENTATION

15 7.5 0 15 30 60 90
SCALE: 1"=30'-0"

BREEDLOVE LAND PLANNING
Landscape Architects • Civil Engineers
www.landplanning.net

Menefee Architecture | Architecture Planning Design
1075 Brady Ave NW Atlanta GA 30318 | t 404.876.1011

GEORGIA REGISTERED No. PE038701 PROFESSIONAL ENGINEER KYLE WATSON WEBB

COPYRIGHT

This drawing and all reproductions are copyrighted and the property of Menefee Architecture LLC and may not be used in any way without their permission.

COPYRIGHT 2018

ROME TENNIS INDOOR FACILITY

Rome, Georgia

DRAWN BY	CHECKED BY
BAM	KWW

DATE
2019-02-15

REVISIONS	
NUMBER	DATE

TITLE
LAYOUT & PAVING PLAN

PROJECT NUMBER
201811

SHEET NUMBER
C200

75% CONSTRUCTION DOCUMENTS 2/15/2019

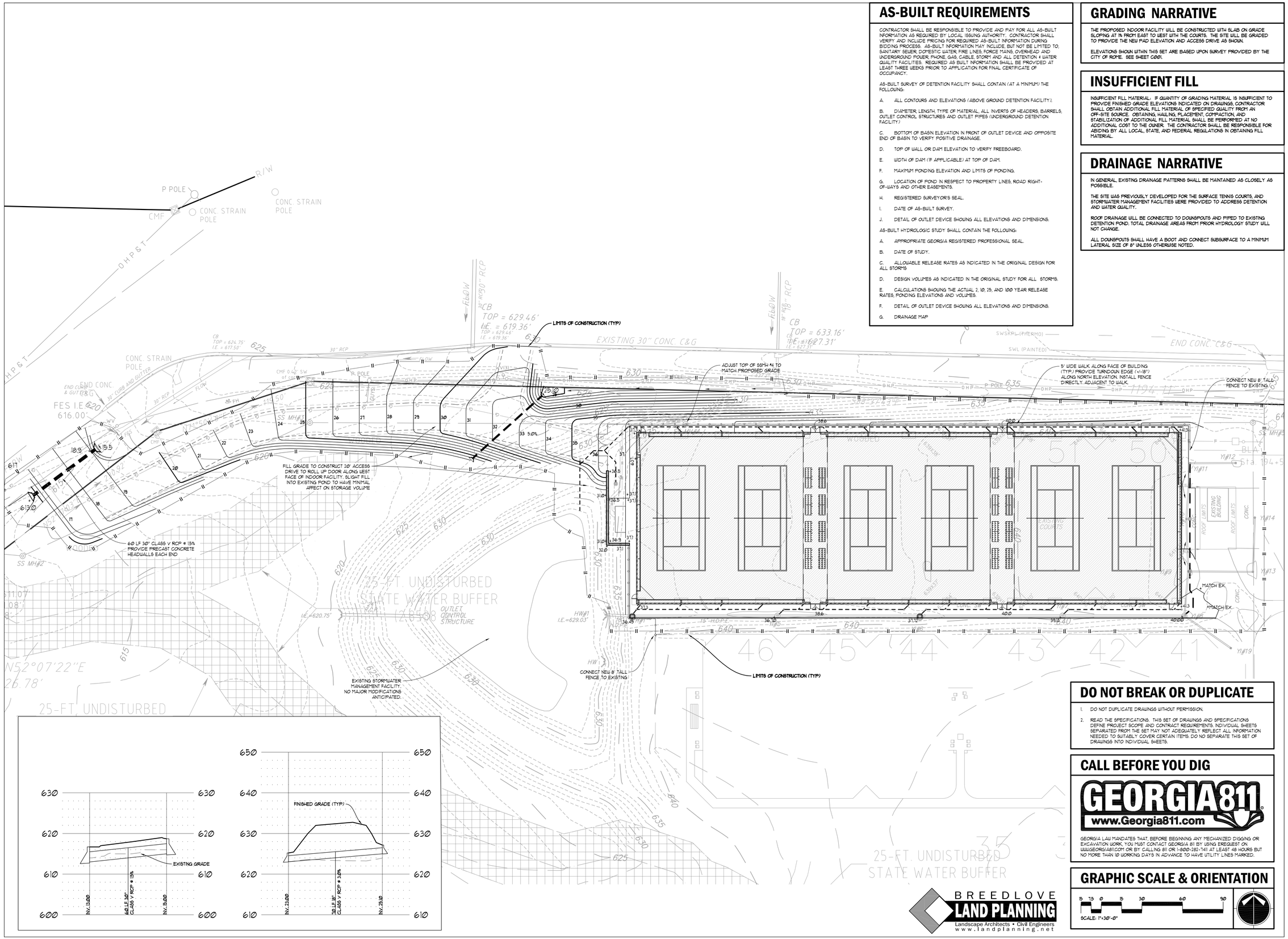

AS-BUILT REQUIREMENTS

CONTRACTOR SHALL BE RESPONSIBLE TO PROVIDE AND PAY FOR ALL AS-BUILT INFORMATION AS REQUIRED BY LOCAL ISSUING AUTHORITY. CONTRACTOR SHALL VERIFY AND INCLUDE PRICING FOR REQUIRED AS-BUILT INFORMATION DURING BIDDING PROCESS. AS-BUILT INFORMATION MAY INCLUDE BUT NOT BE LIMITED TO, SANITARY SEWER, DOMESTIC WATER, FIRE LINES, FORCE MAINS, OVERHEAD AND UNDERGROUND POWER, PHONE, GAS, CABLE, STORM AND ALL DETENTION & WATER QUALITY FACILITIES. REQUIRED AS BUILT INFORMATION SHALL BE PROVIDED AT LEAST THREE WEEKS PRIOR TO APPLICATION FOR FINAL CERTIFICATE OF OCCUPANCY.

AS-BUILT SURVEY OF DETENTION FACILITY SHALL CONTAIN (AT A MINIMUM) THE FOLLOWING:

A. ALL CONTOURS AND ELEVATIONS (ABOVE GROUND DETENTION FACILITY).

B. DIAMETER, LENGTH, TYPE OF MATERIAL, ALL INVERTS OF HEADERS, BARRELS, OUTLET CONTROL STRUCTURES AND OUTLET PIPES (UNDERGROUND DETENTION FACILITY)

C. BOTTOM OF BASIN ELEVATION IN FRONT OF OUTLET DEVICE AND OPPOSITE END OF BASIN TO VERIFY POSITIVE DRAINAGE.

D. TOP OF WALL OR DAM ELEVATION TO VERIFY FREEBOARD.

E. WIDTH OF DAM (IF APPLICABLE) AT TOP OF DAM.

F. MAXIMUM PONDING ELEVATION AND LIMITS OF PONDING.

G. LOCATION OF POND IN RESPECT TO PROPERTY LINES, ROAD RIGHT-OF-WAYS AND OTHER EASEMENTS.

H. REGISTERED SURVEYOR'S SEAL.

I. DATE OF AS-BUILT SURVEY.

J. DETAIL OF OUTLET DEVICE SHOWING ALL ELEVATIONS AND DIMENSIONS.

AS-BUILT HYDROLOGIC STUDY SHALL CONTAIN THE FOLLOWING:

A. APPROPRIATE GEORGIA REGISTERED PROFESSIONAL SEAL.

B. DATE OF STUDY.

C. ALLOWABLE RELEASE RATES AS INDICATED IN THE ORIGINAL DESIGN FOR ALL STORMS

D. DESIGN VOLUMES AS INDICATED IN THE ORIGINAL STUDY FOR ALL STORMS.

E. CALCULATIONS SHOWING THE ACTUAL 2, 10, 25, AND 100 YEAR RELEASE RATES, PONDING ELEVATIONS AND VOLUMES.

F. DETAIL OF OUTLET DEVICE SHOWING ALL ELEVATIONS AND DIMENSIONS.

G. DRAINAGE MAP

GRADING NARRATIVE

THE PROPOSED INDOOR FACILITY WILL BE CONSTRUCTED WITH SLAB ON GRADE SLOPING AT 1% FROM EAST TO WEST WITH THE COURTS. THE SITE WILL BE GRADED TO PROVIDE THE NEW PAD ELEVATION AND ACCESS DRIVE AS SHOWN.

ELEVATIONS SHOWN WITHIN THIS SET ARE BASED UPON SURVEY PROVIDED BY THE CITY OF ROME. SEE SHEET C000.

INSUFFICIENT FILL

INSUFFICIENT FILL MATERIAL: IF QUANTITY OF GRADING MATERIAL IS INSUFFICIENT TO PROVIDE FINISHED GRADE ELEVATIONS INDICATED ON DRAWINGS, CONTRACTOR SHALL OBTAIN ADDITIONAL FILL MATERIAL OF SPECIFIED QUALITY FROM AN OFF-SITE SOURCE. OBTAINING, HAULING, PLACEMENT, COMPACTION, AND STABILIZATION OF ADDITIONAL FILL MATERIAL SHALL BE PERFORMED AT NO ADDITIONAL COST TO THE OWNER. THE CONTRACTOR SHALL BE RESPONSIBLE FOR ABIDING BY ALL LOCAL, STATE, AND FEDERAL REGULATIONS IN OBTAINING FILL MATERIAL.

DRAINAGE NARRATIVE

IN GENERAL, EXISTING DRAINAGE PATTERNS SHALL BE MAINTAINED AS CLOSELY AS POSSIBLE.

THE SITE WAS PREVIOUSLY DEVELOPED FOR THE SURFACE TENNIS COURTS, AND STORMWATER MANAGEMENT FACILITIES WERE PROVIDED TO ADDRESS DETENTION AND WATER QUALITY.

ROOF DRAINAGE WILL BE CONNECTED TO DOWNSPOUTS AND PIPED TO EXISTING DETENTION POND. TOTAL DRAINAGE AREAS FROM PRIOR HYDROLOGY STUDY WILL NOT CHANGE.

ALL DOWNSPOUTS SHALL HAVE A BOOT AND CONNECT SUBSURFACE TO A MINIMUM LATERAL SIZE OF 8" UNLESS OTHERWISE NOTED.

DO NOT BREAK OR DUPLICATE

1. DO NOT DUPLICATE DRAWINGS WITHOUT PERMISSION.
2. READ THE SPECIFICATIONS. THIS SET OF DRAWINGS AND SPECIFICATIONS DEFINE PROJECT SCOPE AND CONTRACT REQUIREMENTS. INDIVIDUAL SHEETS SEPARATED FROM THE SET MAY NOT ADEQUATELY REFLECT ALL INFORMATION NEEDED TO SUITABLY COVER CERTAIN ITEMS. DO NO SEPARATE THIS SET OF DRAWINGS INTO INDIVIDUAL SHEETS.

CALL BEFORE YOU DIG

GEORGIA811
www.Georgia811.com

GEORGIA LAW MANDATES THAT, BEFORE BEGINNING ANY MECHANIZED DIGGING OR EXCAVATION WORK, YOU MUST CONTACT GEORGIA 811 BY USING EREQUEST ON WWW.GEORGIA811.COM OR BY CALLING 811 OR 1-800-282-7411 AT LEAST 48 HOURS BUT NO MORE THAN 10 WORKING DAYS IN ADVANCE TO HAVE UTILITY LINES MARKED.

GRAPHIC SCALE & ORIENTATION

15 7.5 0 15 30 60 90

SCALE: 1"=30'-0"

BREEDLOVE LAND PLANNING
Landscape Architects • Civil Engineers
www.landplanning.net

Menefee Architecture
Architecture | Planning | Design
1075 Brady Ave NW Atlanta GA 30318 | t 404.876.1011

GEORGIA REGISTERED No. PE038701 PROFESSIONAL ENGINEER KYLE WATSON WEBB

COPYRIGHT

This drawing and all reproductions copyrighted and the property of Menefee Architecture LLC and may not be used in any without their permission.

COPYRIGHT 2018

ROME TENNIS INDOOR FACILITY

Rome, Georgia

DRAWN BY	CHECKED BY
BAM	KWW

DATE
2019-02-15

REVISIONS	
NUMBER	DATE

TITLE
GRADING & DRAINAGE PLAN

PROJECT NUMBER
201811

SHEET NUMBER
C300

75% CONSTRUCTION DOCUMENTS 2/15/2019

EROSION, SEDIMENTATION & POLLUTION CONTROL PLAN CHECKLIST
STAND ALONE CONSTRUCTION PROJECTS
(1)

SWCD: FLOYD COUNTY SWCD

Project Name: ROME TENNIS CENTER INDOOR FACILITY	Address: 100 MATCH POINT WAY ROME, GA 30165
City/County: CITY OF ROME / FLOYD COUNTY	Date on Plans: FEBRUARY 8, 2019

Plan Page #	Included Y/N		TO BE SHOWN ON ES&PC PLAN
C405	YES	1	The applicable Erosion, Sedimentation and Pollution Control Plan Checklist established by the Commission as of January 1 of the year in which the land-disturbing activity was permitted.
ALL ESPC	YES	2	Level II certification number issued by the Commission, signature and seal of the certified design professional.
N/A*	N/A*	3	Limits of disturbance shall be no greater than 50 acres at any one time without prior written authorization from the EPD District Office. If EPD approves the request to disturb 50 acres or more at any one time, the plan must include at least 4 of the BMPs listed in Appendix 1 of this checklist.*
C000	YES	4	The name and phone number of the 24-hour local contact responsible for erosion, sedimentation and pollution controls.
C000	YES	5	Provide the name, address, email address, and phone number of primary permittee.
C000, C410-40	YES	6	Note total and disturbed acreage of the project or phase under construction.
C410	YES	7	Provide the GPS location of the construction exit for the site. Give the Latitude and Longitude in decimal degrees.
C405	YES	8	Initial date of the Plan and the dates of any revisions made to the Plan including the entity who requested the revisions.
C400	YES	9	Description of the nature of construction activity.
C000	YES	10	Provide vicinity map showing site's relation to surrounding areas. Include designation of specific phase, if necessary.
C405	YES	11	Identify the project receiving waters and describe all sensitive adjacent areas including streams, lakes, residential areas, wetlands, marshlands, etc. which may be affected.
ALL ESPC	YES	12	Design professional's certification statement and signature that the site was visited prior to development of the ES&PC Plan as stated on Part IV page 19 of the permit.
C400	YES	13	Design professional's certification statement and signature that the permittee's ES&PC Plan provides for an appropriate and comprehensive system of BMPs and sampling to meet permit requirements as stated on Part IV page 19 of the permit. *
C410	YES	14	Clearly note the statement that "The design professional who prepared the ES&PC Plan is to inspect the installation of the initial sediment storage requirements and perimeter control BMPs within 7 days after installation." in accordance with Part IV.A.5 page 25 of the permit.*
C410-30	YES	15	Clearly note the statement that "Non-exempt activities shall not be conducted within the 25 or 50-foot undisturbed stream buffers as measured from the point of wrested vegetation or within 25-feet of the coastal marshland buffer as measured from the Jurisdictional Determination Line without first acquiring the necessary variances and permits."
C400	YES	16	Provide a description of any buffer encroachments and indicate whether a buffer variance is required.
C400 ALL ESPC	YES	17	Clearly note the statement that "Amendments/revisions to the ES&PC Plan which have a significant effect on BMPs with a hydraulic component must be certified by the design professional." *
C400 ALL ESPC	YES	18	Clearly note the statement that "Waste materials shall not be discharged to waters of the State, except as authorized by a section 404 permit." *
C400 ALL ESPC	YES	19	Clearly note statement that "The escape of sediment from the site shall be prevented by the installation of erosion and sediment control measures and practices prior to land disturbing activities."
C400 ALL ESPC	YES	20	Clearly note statement that "Erosion control measures will be maintained at all times. If full implementation of the approved plan does not provide for effective erosion control, additional erosion and sediment control measures shall be implemented to control or treat the sediment source."
C400 ALL ESPC	YES	21	Clearly note the statement "Any disturbed area left exposed for a period greater than 14 days shall be stabilized with mulch or temporary seeding."
C405	N/A	22	Any construction activity which discharges storm water into an Impaired Stream Segment, or within 1 linear mile upstream of and within the same watershed as, any portion of an Biota Impaired Stream Segment must comply with Part III. C. of the Permit. Include the completed Appendix 1 listing all the BMPs that will be used for those areas of the site which discharge to the Impaired Stream Segment.*
N/A	N/A	23	If a TMDL Implementation Plan for sediment has been finalized for the Impaired Stream Segment (identified in item 22 above) at least six months prior to submittal of NOI, the ES&PC Plan must address any site-specific conditions or requirements included in the TMDL Implementation Plan.*
C410 C440	YES	24	BMPs for concrete washdown of tools, concrete mixer chutes, hoppers and the rear of the vehicles. Washout of the drum at the construction site is prohibited.*
C410	YES	25	Provide BMPs for the remediation of all petroleum spills and leaks.
C420	YES	26	Description of the measures that will be installed during the construction process to control pollutants in storm water that will occur after construction operations have been completed.*
Cxxx	YES	27	Description of practices to provide cover for building materials and building products on site.*
C420	YES	28	Description of the practices that will be used to reduce the pollutants in storm water discharges.*
C000	YES	29	Description and chart or timeline of the intended sequence of major activities which disturb soils for the major portions of the site (i.e., initial perimeter and sediment storage BMPs, clearing and grubbing activities, excavation activities, utility activities, temporary and final stabilization).
C400	YES	30	Provide complete requirements of inspections and record keeping by the primary permittee.*
C400	YES	31	Provide complete requirements of sampling frequency and reporting of sampling results.*
C400	YES	32	Provide complete details for retention of records as per Part IV.F. of the permit.*
C400	YES	33	Description of analytical methods to be used to collect and analyze the samples from each location.*
C400	YES	34	Appendix B rationale for NTU values at all outfall sampling points where applicable.*
C410-C440	YES	35	Delineate all sampling locations, perennial and intermittent streams and other water bodies into which storm water is discharged.*
ALL ESPC	YES	36	A description of appropriate controls and measures that will be implemented at the construction site including: (1) initial sediment storage requirements and perimeter control BMPs, (2) intermediate grading and drainage BMPs, and (3) final BMPs. For construction sites where there will be no mass grading and the initial perimeter control BMPs, intermediate grading and drainage BMPs, and final BMPs are the same, the plan may combine all of the BMPs into a single phase.*
ALL ESPC	YES	37	Graphic scale and North arrow.
ALL ESPC C300 C301	YES	38	Existing and proposed contour lines with contour lines drawn at an interval in accordance with the following: Map Scale / Ground Slope / Contour Intervals, ft. 1 inch = 100ft or / Flat 0 - 2% / 0.5 or 1 larger scale / Rolling 2 - 8% / 1 or 2 / Steep 8% + / 2,5 or 10
N/A	N/A	39	Use of alternative BMPs whose performance has been documented to be equivalent to or superior to conventional BMPs as certified by a Design Professional (unless disapproved by EPD or the Georgia Soil and Water Conservation Commission). Please refer to the Alternative BMP Guidance Document found at www.gaswcc.org.
N/A	N/A	40	Use of alternative BMP for application to the Equivalent BMP List. Please refer to Appendix A-2 of the Manual for Erosion & Sediment Control in Georgia 2016 Edition.*
YES	C410-C440	41	Delineation of the applicable 25-foot or 50-foot undisturbed buffers adjacent to state waters and any additional buffers required by the Local Issuing Authority. Clearly note and delineate all areas of impact.
N/A	N/A	42	Delineation of on-site wetlands and all state waters located on and within 200 feet of the project site.
HYDRO	HYDRO	43	Delineation and acreage of contributing drainage basins on the project site.
HYDRO	HYDRO	44	Provide hydrology study and maps of drainage basins for both the pre- and post-developed conditions.*
C400	YES	45	An estimate of the runoff coefficient or peak discharge flow of the site prior to and after construction activities are completed.
C420-C440, C450	N/A. NO OPEN HEADWALLS	46	Storm-drain pipe and weir velocities with appropriate outlet protection to accommodate discharges without erosion. Identify/Delineate all storm water discharge points.
C405	YES	47	Soil series for the project site and their delineation.
ALL ESPC	YES	48	The limits of disturbance for each phase of construction.
ALL ESPC	YES	49	Provide a minimum of 67 cubic yards of sediment storage per acre drained using a temporary sediment basin, retrofitted detention pond, and/or excavated inlet sediment traps for each common drainage location. Sediment storage volume must be in place prior to and during all land disturbance activities until final stabilization of the site has been achieved. A written justfication explaining the decision to use equivalent controls when a sediment basin is not attainable must be included in the plan for each common drainage location in which a sediment basin is not provided. A written justification as to why 67 cubic yards of storage is not attainable must also be given. Worksheets from the Manual included for structural BMPs and all calculations used by the storage design professional to obtain the required sediment when using equivalent controls. When discharging from sediment basins and impoundments, permitees are required to utilize outlet structures that withdraw water from sediment basins and impoundments, permitees are required to utilize outlet structures that withdraw water from the surface, unless infeasible. If outlet structures that withdraw water from the surface are not feasable, a written justification explaining this decision must be included in the Plan.
ALL ESPC	YES	50	Location of Best Management Practices that are consistent with and no less stringent than the Manual for Erosion and Sediment Control in Georgia. Use uniform coding symbols from the Manual, Chapter 6, with legend.
C450-C460	YES	51	Provide detailed drawings for all structural practices. Specifications must, at a minimum, meet the guidelines set forth in the Manual for Erosion and Sediment Control in Georgia.
C440	YES	52	Provide vegetative plan, noting all temporary and permanent vegetative practices. Include species, planting dates and seeding, fertilizer, lime and mulching rates. Vegetative plan shall be site specific for appropriate time of the year that seeding will take place and for the appropriate geographic region of Georgia.

*If using this checklist for a project that is less than 1 acre and not part of a common development but within 200 ft of a perennial stream the * checklist items would be N/A.

Effective January 1, 2019

GSWCC LEVEL 2 CERTIFICATIONS

I CERTIFY UNDER PENALTY OF LAW THAT THIS PLAN WAS PREPARED AFTER A SITE VISIT TO THE LOCATIONS DESCRIBED HEREIN BY MYSELF OR MY AUTHORIZED AGENT, UNDER MY SUPERVISION.

I CERTIFY THAT THE PERMITTEE'S EROSION, SEDIMENTATION AND POLLUTION CONTROL PLAN PROVIDES FOR AN APPROPRIATE AND COMPREHENSIVE SYSTEM OF BEST MANAGEMENT PRACTICES REQUIRED BY THE GEORGIA WATER QUALITY CONTROL ACT AND THE DOCUMENT "MANUAL FOR EROSION AND SEDIMENT CONTROL IN GEORGIA" (MANUAL)⅛ PUBLISHED BY THE STATE SOIL AND WATER CONSERVATION COMMISSION AS OF JANUARY 1 OF THE YEAR IN WHICH THE LAND-DISTURBING ACTIVITY WAS PERMITTED, PROVIDES FOR THE SAMPLING OF THE RECEIVING WATER(S) OR THE SAMPLING OF THE STORM WATER OUTFALLS AND THAT THE DESIGNED SYSTEM OF BEST MANAGEMENT PRACTICES AND SAMPLING METHODS IS EXPECTED TO MEET THE REQUIREMENTS CONTAINED IN THE GENERAL NPDES PERMIT NO. GAR 100001.

SIGNED: DATE: 02-08-2019

CERTIFIED DESIGN PROFESSIONAL: KYLE WEBB
GSWCC CERTIFICATION NO. LEVEL II # 0000072917
EXPIRATION DATE: 12-19-2020
COMPANY: BREEDLOVE LAND PLANNING, INC.

(2) (12) (13)

24-HOUR EROSION CONTACT
(4)

NAME:
COMPANY:
EMAIL ADDRESS:
PHONE NUMBER:

PRIMARY PERMITTEE
(5)

CONTACT NAME: TOM DAGLIS
CONTACT TITLE: EXECUTIVE DIRECTOR
REPRESENTING: ROME TENNIS CENTER
EMAIL ADDRESS: TDAGLIS@ROMETENNISCENTER.COM
PHONE NUMBER: 706-236-4487

PLAN SUBMITTAL SUMMARY
(8)

DESCRIPTION:	DATE:	ENTITY REQUESTING REVISION:
1. INITIAL SUBMITTAL DATE:	02-08-19	INITIAL SUBMITTAL
2.		
3.		
4.		
5.		
6.		
7.		
8.		
9.		

CONSTRUCTION ACTIVITY
(9)

EXISTING CONDITIONS SUMMARY:
THIS PROJECT IS A REDEVELOPMENT PROJECT ADJACENT TO THE RESTROOM AREA FOR ROME TENNIS CENTER. AREA OF WORK IS PRIMARILY PAVED TENNIS COURTS IN EXISTING CONDITIONS WITH STABILIZED AREAS OF TURF AND PLANTING SURROUNDING EXISTING PAVEMENT. AREA IS WELL MAINTAINED BY STAFF.

PROPOSED CONDITIONS SUMMARY:
THIS PROJECT PROPOSES TO REMOVE EXISTING PAVED COURTS AND CONSTRUCT A NEW INDOOR TENNIS FACILITY IN THEIR PLACE. RUNOFF WILL BE COLLECTED AND TIED TO AN EXISTING ONSITE STORM SYSTEM. ALL WATER FROM THE PROPOSED PROJECT DRAINS TO EXISTING PONDS WITHIN THE TENNIS CENTER PROPERTY THAT DISCHARGE TO THE BIG DRY CREEK.

PROJECT RECEIVING WATERS
(11)

INITIAL PROJECT RECEIVING WATERS: BIG DRY CREEK

RECEIVING WATERS SUPPORT: WARM WATER FISHERIES

SUMMARY OF NEIGHBORING AREAS AND PROJECT EFFECTS:
POST-DEVELOPED RUNOFF FROM THE PROJECT SITE WILL BE MINIMALLY CHANGED BY THE PROPOSED DEVELOPMENT. ASPHALT SURFACES WILL BE REMOVED AND REPLACED WITH INDORR TENNIS FACILITY. WATER WILL BE DETAINED (AS IN EXISTING CONDITIONS) PRIOR TO BEING DISCHARGED DOWNSTREAM TO THE BIG DRY CREEK. NO ADVERSE IMPACTS ARE ANTICIPATED AS A RESULT OF THE PROJECT DEVELOPMENT.

INITIAL EROSION INSPECTION
(14)

THE DESIGN PROFESSIONAL WHO PREPARED THE ES&PC PLAN IS TO INSPECT THE INSTALLATION OF THE INITIAL SEDIMENT STORAGE REQUIREMENTS AND PERIMETER CONTROL BMPS WITHIN 7 DAYS AFTER INSTALLATION.

THE PRIMARY PERMITTEE MUST RETAIN THE DESIGN PROFESSIONAL WHO PREPARED THE PLAN, EXCEPT WHEN THE PRIMARY PERMITTEE HAS REQUESTED IN WRITING AND E.P.D. HAS AGREED TO AN ALTERNATE DESIGN PROFESSIONAL, TO INSPECT THE INITIAL SEDIMENT STORAGE REQUIREMENTS AND PERIMETER CONTROL BMPS.

THE DESIGN PROFESSIONAL SHALL DETERMINE IF THESE BMPS HAVE BEEN INSTALLED AND ARE BEING MAINTAIN AS DESIGNED.

THE DESIGN PROFESSIONAL SHALL REPORT THE RESULTS OF THE INSPECTION TO THE PRIMARY PERMITTEE (AND OPERATOR) WITHIN SEVEN (7) DAYS AND THE PERMITTEE (AND OPERATOR) MUST CORRECT ALL DEFICIENCIES WITHIN TWO (2) BUSINESS DAYS OF RECEIPT OF THE INSPECTION REPORT FROM THE DESIGN PROFESSIONAL UNLESS WEATHER RELATED SITE CONDITIONS ARE SUCH THAT ADDITIONAL TIME IS REQUIRED.

STREAM BUFFERS
(15) (16)

NON-EXEMPT ACTIVITIES SHALL NOT BE CONDUCTED WITHIN THE 25-FOOT UNDISTURBED STREAM BUFFERS AS MEASURED FROM THE POINT OF WRESTED VEGETATION OR WITHIN 25 FEET OF THE COASTAL MARSHLAND BUFFER AS MEASURED FROM THE JURISDICTIONAL DETERMINATION LINE WITHOUT FIRST ACQUIRING THE NECESSARY VARIANCES AND PERMITS.

DESCRIPTION OF BUFFER ENCROACHMENTS:
THIS PROJECT DOES NOT PROPOSED ANY BUFFER ENCROACHMENTS. NO VARIANCES FROM E.P.D. OR THE U.S.A.C.O.E. ARE REQUIRED.

PLAN REVISIONS
(17)

AMENDMENTS / REVISIONS TO THE ES&PC PLAN WHICH HAVE A SIGNIFICANT EFFECT ON BMPS WITH A HYDRAULIC COMPONENT MUST BE CERTIFIED BY THE DESIGN PROFESSIONAL.

SEE PART IV. C. KEEPING PLANS CURRENT. THE PRIMARY PERMITTEE SHALL AMEND APPROVED PLANS WHERE THERE IS A CHANGE IN DESIGN, CONSTRUCTION, OPERATION, OR MAINTENANCE, WHICH HAS A SIGNIFICANT EFFECT ON BMPS WITH A HYDRAULIC COMPONENT (I.E., THOSE BMPS WHERE THE DESIGN IS BASED UPON RAINFALL INTENSITY, DURATION AND FREQUENCY OF STORMS) OR IF THE PLAN PROVES TO BE INEFFECTIVE IN ELIMINATING OR SIGNIFICANTLY MINIMIZING POLLUTANTS FROM SOURCES IDENTIFIED UNDER PART IV.D.3. AMENDMENTS TO THE PLAN MUST BE CERTIFIED BY THE DESIGN PROFESSIONAL.

GSWCC REQUIRED NOTES

THE DESIGN PROFESSIONAL WHO PREPARED THE ES&PC PLAN IS TO INSPECT THE INSTALLATION OF THE INITIAL SEDIMENT STORAGE REQUIREMENTS AND PERIMETER CONTROL BMPS WITHIN 7 DAYS AFTER INSTALLATION.

NON-EXEMPT ACTIVITIES SHALL NOT BE CONDUCTED WITHIN THE 25 OR 50-FOOT UNDISTURBED STREAM BUFFERS AS MEASURED FROM THE POINT OF WRESTED VEGETATION OR WITHIN 25 FEET OF THE COASTAL MARSHLAND BUFFER AS MEASURED FROM THE JURISDICTIONAL DETERMINATION LINE WITHOUT FIRST ACQUIRING THE NECESSARY VARIANCES AND PERMITS.

AMENDMENTS / REVISIONS TO THE ES&PC PLAN WHICH HAVE A SIGNIFICANT EFFECT ON BMPS WITH A HYDRAULIC COMPONENT MUST BE CERTIFIED BY THE DESIGN PROFESSIONAL.

WASTE MATERIALS SHALL NOT BE DISCHARGED TO WATERS OF THE STATE, EXCEPT AS AUTHORIZED BY A SECTION 404 PERMIT.

THE ESCAPE OF SEDIMENT FROM THE SITE SHALL BE PREVENTED BY THE INSTALLATION OF EROSION AND SEDIMENT CONTROL MEASURES AND PRACTICES PRIOR TO LAND DISTURBING ACTIVITIES.

EROSION CONTROL MEASURES WILL BE MAINTAINED AT ALL TIMES. IF FULL IMPLEMENTATION OF THE APPROVED PLAN DOES NOT PROVIDE FOR EFFECTIVE EROSION CONTROL, ADDITIONAL EROSION AND SEDIMENT CONTROL MEASURES SHALL BE IMPLEMENTED TO CONTROL OR TREAT THE SEDIMENT SOURCE.

ANY DISTURBED AREA LEFT EXPOSED FOR A PERIOD GREATER THAN 14 DAYS SHALL BE STABILIZED WITH MULCH OR TEMPORARY SEEDING.

(14) (15) (17) (18) (19) (20) (21)

SPILL PREVENTION & CONTROL

- LOCAL, STATE & MANUFACTURER'S RECOMMENDED METHODS FOR SPILL CLEANUP WILL BE CLEARLY POSTED & PROCEDURES WILL BE MADE AVAILABLE TO SITE PERSONNEL.
- MATERIAL & EQUIPMENT NECESSARY FOR SPILL CLEANUP WILL BE KEPT IN THE MATERIAL STORAGE AREAS. TYPICAL MATERIALS & EQUIPMENT INCLUDES, BUT IS NOT LIMITED TO, BROOMS DISTPANS, MOPS, RAGS, GLOVES, GOGGLES, CAT LITTER, SAND, SAWDUST & PROPERLY LABELED PLASTIC & METAL WASTE CONTAINERS.
- SPILL PREVENTION PRACTICES & PROCEDURES WILL BE REVIEWED AFTER A SPILL & ADJUSTED AS NECESSARY TO PREVENT FUTURE SPILLS.
- ALL SPILLS WILL BE CLEANED UP IMMEDIATELY UPON DISCOVERY. ALL SPILLS WILL BE REPORTED AS REQUIRES BY LOCAL, STATE & FEDERAL REGULATIONS.
- FOR SPILLS THAT IMPACT SURFACE WATER (LEAVE A SHEEN ON SURFACE WATER), THE NATIONAL RESPONSE CENTER (NRC) WILL BE CONTACTED WITHIN 24 HOURS AT 1-800-426-2675.
- FOR SPILLS OF AN UNKNOWN AMOUNT, THE NATIONAL RESPONSE CENTER (NRC) WILL BE CONTACTED WITHIN 24 HOURS AT 1-800-426-2675.
- FOR SPILLS GREATER THAN 25 GALLONS & NO SURFACE WATER IMPACTS OCCUR, THE GEORGIA E.P.D. WILL BE CONTACTED WITHIN 24 HOURS.
- FOR SPILLS LESS THAN 25 GALLONS & NO SURFACE WATER IMPACTS OCCUR, THE SPILL WILL BE CLEANED UP & LOCAL AGENCIES WILL BE CONTACTED AS REQUIRED.

THE CONTRACTOR SHALL NOTIFY THE LICENSED PROFESSIONAL WHO PREPARED THIS PLAN IF MORE THAN 1320 GALLONS OF PETROLEUM IS STORED ONSITE (THIS INCLUDES CAPACITIES OF EQUIPMENT) OR IF ANY ONE PIECE OF EQUIPMENT HAS A CAPACITY GREATER THAN 660 GALLONS. THE CONTRACTOR WILL NEED A SPILL PREVENTION CONTAINMENT & COUNTERMEASURES PLAN PREPARED BY THE LICENSED PROFESSIONAL. (25)

CONSTRUCTION MATERIAL STORAGE

FOR BUILDING MATERIALS, BUILDING PRODUCTS, CONSTRUCTION WASTES, TRASH LANDSCAPE MATERIALS, FERTILIZERS, PESTICIDES, HERBICIDES, DETERGENTS, SANITARY WASTE, AND OTHER MATERIALS PRESENT ON THE SITE, CONTRACTOR SHALL PROVIDE COVER (E.G. PLASTIC SHEETING, TEMPORARY ROOFS, OR OTHER METHODS TO THE SATISFACTION OF THE INSPECTOR) TO MINIMIZE THE EXPOSURE OF THESE PRODUCTS TO PRECIPITATION AND TO STORMWATER, OR SHALL PROVIDE A SIMILARLY EFFECTIVE MEANS DESIGNED TO MINIMIZE THE DISCHARGE OF POLLUTANTS FROM THESE AREAS. MATERIALS SHALL BE STORED IN LOCATIONS WHICH ARE PROTECTED DOWNSTREAM BY BMPs INCLUDED ON THE EROSION PLANS PRIOR TO DISCHARGE FROM THE CONSTRUCTION SITE. MINIMIZATION OF EXPOSURE IS NOT REQUIRED IN CASES WHERE EXPOSURE TO PRECIPITATION AND TO STORMWATER WILL NOT RESULT IN A DISCHARGE OF POLLUTANTS, OR WHERE EXPOSURE OF A SPECIFIC MATERIAL OR PRODUCT POSES LITTLE RISK TO STORMWATER CONTAMINATION (SUCH AS FINAL PRODUCTS AND MATERIALS INTENDED FOR OUTDOOR USE). (27)

PRODUCT SPECIFIC PRACTICES

- PETROLEUM BASED PRODUCTS - CONTAINERS FOR PRODUCTS SUCH AS FUELS, LUBRICANTS, AND TARS WILL BE INSPECTED DAILY FOR LEAKS AND SPILLS. THIS INCLUDES ONSITE VEHICLES AND MACHINERY DAILY INSPECTIONS AND REGULAR PREVENTATIVE MAINTENANCE OF SUCH EQUIPMENT. EQUIPMENT MAINTENANCE AREAS WILL BE LOCATED AWAY FROM STATE WATERS, NATURAL DRAINS, AND STORM WATER DRAINAGE INLETS. IN ADDITION, TEMPORARY FUELING TANKS SHALL HAVE A SECONDARY CONTAINMENT LINER TO PREVENT/MINIMIZE SITE CONTAMINATION. DISCHARGE OF OILS, FUELS, AND LUBRICANTS IS PROHIBITED. PROPER DISPOSAL METHODS WILL INCLUDE COLLECTION IN A SUITABLE CONTAINER AND DISPOSAL AS REQUIRED BY LOCAL AND STATE REGULATIONS.
- PAINTS/FINISHES/SOLVENTS - ALL PRODUCTS WILL BE STORED IN TIGHTLY SEALED ORIGINAL CONTAINERS WHEN NOT IN USE. EXCESS PRODUCT WILL NOT BE DISCHARGED TO THE STORM WATER COLLECTION SYSTEM. EXCESS PRODUCT, MATERIALS USED WITH THESE PRODUCTS, AND PRODUCT CONTAINERS WILL BE DISPOSED OF ACCORDING TO MANUFACTURER'S SPECIFICATIONS AND RECOMMENDATIONS.
- CONCRETE TRUCK WASHING - NO CONCRETE TRUCKS WILL BE ALLOWED TO WASH OUT OR DISCHARGE SURPLUS CONCRETE OR DRUM WASH WATER ONSITE.
- FERTILIZER/HERBICIDES - THESE PRODUCTS WILL BE APPLIED AT RATES THAT DO NOT EXCEED THE MANUFACTURER'S SPECIFICATIONS OR ABOVE THE GUIDELINES SET FORTH IN THE CROP ESTABLISHMENT OR IN THE GSWCC MANUAL FOR EROSION AND SEDIMENT CONTROL IN GEORGIA. ANY STORAGE OF THESE MATERIALS WILL BE UNDER ROOF IN SEALED CONTAINERS.
- BUILDING MATERIALS - NO BUILDING OR CONSTRUCTION MATERIALS WILL BE BURIED OR DISPOSED OF ONSITE. ALL SUCH MATERIAL WILL BE DISPOSED OF IN PROPER WASTE DISPOSAL PROCEDURES. (28)

INSPECTION & RECORD KEEPING

INSPECTION AND RECORD KEEPING REQUIREMENTS BELOW ARE LISTED IN ACCORDANCE WITH PART IV. D. 4. a OF THE GAR 100001 STAND-ALONE PERMIT.

1. EACH DAY WHEN ANY TYPE OF CONSTRUCTION ACTIVITY HAS TAKEN PLACE AT A PRIMARY PERMITTEE'S SITE, CERTIFIED PERSONNEL PROVIDED BY THE PRIMARY PERMITTEE SHALL INSPECT: (A) ALL AREAS AT THE PRIMARY PERMITTEE'S SITE WHERE PETROLEUM PRODUCTS ARE STORED, USED, OR HANDLED FOR SPILLS AND LEAKS FROM VEHICLES AND EQUIPMENT AND (B) ALL LOCATIONS AT THE PRIMARY PERMITTEE'S SITE WHERE VEHICLES ENTER OR EXIT THE SITE FOR EVIDENCE OF OFF-SITE SEDIMENT TRACKING. THESE INSPECTIONS MUST BE CONDUCTED UNTIL A NOTICE OF TERMINATION IS SUBMITTED.

2. MEASURE AND RECORD RAINFALL WITHIN DISTURBED AREAS OF THE SITE THAT HAVE NOT MET FINAL STABLIZATION ONCE EVERY 24 HOURS EXCEPT ANY NON-WORKING SATURDAY, NON-WORKING SUNDAY AND NON-WORKING FEDERAL HOLIDAY. THE DATA COLLECTED FOR THE PURPOSE OF COMPLIANCE WITH THIS PERMIT SHALL BE REPRESENTATIVE OF THE MONITORED ACTIVITY. MEASUREMENT OF RAINFALL MAY BE SUSPENDED IF ALL AREAS OF THE SITE HAVE UNDERGONE FINAL STABILIZATION OR ESTABLISHED A CROP OF ANNUAL VEGETATION AND SEEDING OF TARGET PERENNIALS APPROPRIATE FOR THE REGION.

3. CERTIFIED PERSONNEL (PROVIDED BY THE PRIMARY PERMITTEE) SHALL INSPECT THE FOLLOWING AT LEAST ONCE EVERY SEVEN (7) CALENDAR DAYS AND WITHIN 24 HOURS OF THE END OF A STORM THAT IS 0.5 INCHES RAINFALL OR GREATER (UNLESS SUCH STORM ENDS AFTER 5:00 PM ON ANY FRIDAY OR ON ANY NON-WORKING SATURDAY, NON-WORKING SUNDAY OR ANY NON-WORKING FEDERAL HOLIDAY, IN WHICH CASE THE INSPECTION SHALL BE COMPLETED BY THE END OF THE NEXT BUSINESS DAY AND/OR WORKING DAY, WHICHEVER OCCURS FIRST: (A) DISTURBED AREAS OF THE PRIMARY PERMITTEE'S CONSTRUCTION SITE, (B) AREAS USED BY THE PRIMARY PERMITTEE FOR STORAGE OF MATERIALS THAT ARE EXPOSED TO PRECIPITATION, AND (C) STRUCTURAL CONTROL MEASURES. EROSION AND SEDIMENT CONTROL MEASURES IDENTIFIED IN THE PLAN APPLICABLE TO THE PRIMARY PERMITTEE'S SITE SHALL BE OBSERVED TO ENSURE THAT THEY ARE OPERATING CORRECTLY. WHERE DISCHARGE LOCATIONS OR POINTS ARE ACCESSIBLE, THEY SHALL BE INSPECTED TO ASCERTAIN WHETHER EROSION CONTROL MEASURES ARE EFFECTIVE IN PREVENTING SIGNIFICANT IMPACTS TO RECEIVING WATER(S). FOR AREAS OF A SITE THAT HAVE UNDERGONE FINAL STABILIZATION, OR ESTABLISHED A CROP OF ANNUAL VEGETATION AND SEEDING OF TARGET PERENNIALS APPROPRIATE FOR THE REGION, THE PERMITTEE MUST COMPLY WITH PART IV.D.4.A.(4). THESE INSPECTIONS MUST BE CONDUCTED UNTIL A NOTICE OF TERMINATION IS SUBMITTED.

4. CERTIFIED PERSONNEL (PROVIDED BY THE PRIMARY PERMITTEE) SHALL INSPECT AT LEAST ONCE PER MONTH DURING THE TERM OF THIS PERMIT (I.E., UNTIL A NOTICE OF TERMINATION HAS BEEN SUBMITTED) THE AREAS OF THE SITE THAT HAVE UNDERGONE FINAL STABILIZATION OR ESTABLISHED A CROP OF ANNUAL VEGETATION AND A SEEDING OF TARGET PERENNIALS APPROPRIATE FOR THE REGION. THESE AREAS SHALL BE INSPECTED FOR EVIDENCE OF, OR THE POTENTIAL FOR, POLLUTANTS ENTERING THE DRAINAGE SYSTEM AND THE RECEIVING WATER(S). EROSION AND SEDIMENT CONTROL MEASURES IDENTIFIED IN THE PLAN SHALL BE OBSERVED TO ENSURE THAT THEY ARE OPERATING CORRECTLY. WHERE DISCHARGE LOCATIONS OR POINTS ARE ACCESSIBLE, THEY SHALL BE INSPECTED TO ASCERTAIN WHETHER EROSION CONTROL MEASURES ARE EFFECTIVE IN PREVENTING SIGNIFICANT IMPACTS TO RECEIVING WATER(S).

5. BASED ON THE RESULTS OF EACH INSPECTION, THE SITE DESCRIPTION AND THE POLLUTION PREVENTION AND CONTROL MEASURES IDENTIFIED IN THE EROSION, SEDIMENTATION AND POLLUTION CONTROL PLAN, THE PLAN SHALL BE REVISED AS APPROPRIATE NOT LATER THAN SEVEN (7) CALENDAR DAYS FOLLOWING EACH INSPECTION. IMPLEMENTATION OF SUCH CHANGES SHALL BE MADE AS SOON AS PRACTICAL BUT IN NO CASE LATER THAN (7) CALENDAR DAYS FOLLOWING EACH INSPECTION.

6. A REPORT OF EACH INSPECTION THAT INCLUDES THE NAME(S) OF CERTIFIED PERSONNEL MAKING EACH INSPECTION, AND THE DATE(S) OF EACH INSPECTION, CONSTRUCTION PHASE (I.E. INITIAL, INTERMEDIATE, OR FINAL), MAJOR OBSERVATIONS RELATING TO THE IMPLEMENTATION OF THE EROSION, SEDIMENTATION AND POLLUTION CONTROL PLAN AND ACTIONS TAKEN IN ACCORDANCE WITH IV.D.4.A.(5) OF THE PERMIT SHALL BE MADE AND RETAINED AT THE SITE OR BE READILY AVAILABLE AT A DESIGNATED ALTERNATE LOCATION UNTIL THE ENTIRE SITE OR THAT PORTION OF A CONSTRUCTION PROJECT THAT HAS BEEN PHASED HAS UNDERGONE FINAL STABILIZATION AND A NOTICE OF TERMINATION IS SUBMITTED TO EPD. SUCH REPORTS SHALL BE READILY AVAILABLE BY END OF THE SECOND BUSINESS DAY AND/OR WORKING DAY AND SHALL IDENTIFY ALL INCIDENTS OF BEST MANAGEMENT PRACTICES THAT HAVE NOT BEEN PROPERLY INSTALLED AND/OR MAINTAINED AS DESCRIBED IN THE PLAN.. WHERE THE REPORT DOES NOT IDENTIFY ANY, THE INSPECTION REPORT SHALL CONTAIN A CERTIFICATION THAT THE BEST MANAGEMENT PRACTICES ARE IN COMPLIANCE WITH THE EROSION, SEDIMENTATION AND POLLUTION CONTROL PLAN. THE REPORT SHALL BE SIGNED IN ACCORDANCE WITH PART V.G.2. OF THIS PERMIT. (30)

SAMPLING FREQUENCY
(31)

REQUIREMENTS FOR SAMPLING FREQUENCY ARE LISTED BELOW IN ACCORDANCE WITH PART IV. C. 6. d OF THE GAR 100001 STAND-ALONE PERMIT.

A. SAMPLING FREQUENCY

1. THE PRIMARY PERMITTEE MUST SAMPLE IN ACCORDANCE WITH THE PLAN AT LEAST ONCE FOR EACH RAINFALL EVENT DESCRIBED BELOW. FOR A QUALIFYING EVENT, THE PERMITTEE SHALL SAMPLE AT THE BEGINNING OF ANY STORMWATER DISCHARGE TO A MONITORED RECEIVING WATER AND/OR FROM A MONITORED OUTFALL LOCATION WITHIN FORTY-FIVE (45) MINUTES OR AS SOON AS POSSIBLE.
2. HOWEVER, WHERE MANUAL AND AUTOMATIC SAMPLING ARE IMPOSSIBLE (AS DEFINED IN THIS PERMIT), OR ARE BEYOND THE PERMITTEE'S CONTROL, THE PRIMARY PERMITTEE SHALL TAKE SAMPLES AS SOON AS POSSIBLE, BUT IN NO CASE MORE THAN TWELVE (12) HOURS AFTER THE BEGINNING OF THE STORMWATER DISCHARGE.
3. SAMPLING BY THE PRIMARY PERMITTEE SHALL OCCUR FOR THE FOLLOWING QUALIFYING EVENTS:
   a. FOR EACH AREA OF THE SITE THAT DISCHARGES TO A RECEIVING WATER OR FROM AN OUTFALL, THE FIRST RAIN EVENT THAT REACHES OR EXCEEDS 0.5 INCH WITH A STORMWATER DISCHARGE THAT OCCURS DURING NORMAL BUSINESS HOURS AS DEFINED IN THIS PERMIT AFTER ALL CLEARING AND GRUBBING OPERATIONS HAVE BEEN COMPLETED, BUT PRIOR TO COMPLETION OF MASS GRADING OPERATIONS, IN THE DRAINAGE AREA OF THE LOCATION SELECTED AS THE SAMPLING LOCATION.
   b. IN ADDITION TO (A) ABOVE, FOR EACH AREA OF THE SITE THAT DISCHARGES TO A RECEIVING WATER OR FROM AN OUTFALL, THE FIRST RAIN EVENT THAT REACHES OR EXCEEDS 0.5 INCH WITH A STORMWATER DISCHARGE THAT OCCURS DURING NORMAL BUSINESS HOURS AS DEFINED IN THIS PERMIT EITHER 90 DAYS AFTER THE FIRST SAMPLING EVENT OR AFTER ALL MASS GRADING OPERATIONS HAVE BEEN COMPLETED, BUT PRIOR TO SUBMITTAL OF A NOT, IN THE DRAINAGE AREA OF THE LOCATION SELECTED AS THE SAMPLING LOCATION, WHICHEVER COMES FIRST.
   c. AT THE TIME OF SAMPLING PERFORMED PURSUANT TO (A) AND (B) ABOVE, IF BMPS IN ANY AREA OF THE SITE THAT DISCHARGES TO A RECEIVING WATER OR FROM AN OUTFALL ARE NOT PROPERLY DESIGNED, INSTALLED AND MAINTAINED, CORRECTIVE ACTION SHALL BE DEFINED AND IMPLEMENTED WITHIN TWO (2) BUSINESS DAYS, AND TURBIDITY SAMPLES SHALL BE TAKEN FROM DISCHARGES FROM THAT AREA OF THE SITE FOR EACH SUBSEQUENT RAIN EVENT THAT REACHES OR EXCEEDS 0.5 INCH DURING NORMAL BUSINESS HOURS* UNTIL THE SELECTED TURBIDITY STANDARD IS ATTAINED, OR UNTIL POST-STORM EVENT INSPECTIONS DETERMINE THAT BMPS ARE PROPERLY DESIGNED, INSTALLED AND MAINTAINED.
   d. WHERE SAMPLING PURSUANT TO (A), (B) OR (C) ABOVE IS REQUIRED BUT NOT POSSIBLE (OR NOT REQUIRED BECAUSE THERE WAS NO DISCHARGE), THE PERMITTEEE, IN ACCORDANCE WITH THE PART IV.D.4.A.(6), MUST INCLUDE A WRITTEN JUSTIFICATION IN THE INSPECTION REPORT OF WHY SAMPLING WAS NOT PERFORMED. PROVIDING THIS JUSTIFICATION DOES NOT RELIEVE THE PERMITTEE OF ANY SUBSEQUENT SAMPLING OBLIGATIONS UNDER (A), (B) OR (C) ABOVE.
   e. EXISTING CONSTRUCTION ACTIVITIES, I.E., THOSE THAT ARE OCCURRING ON OR BEFORE THE EFFECTIVE DATE OF THIS PERMIT, THAT HAVE MET THE SAMPLING REQUIRED BY (A) ABOVE SHALL SAMPLE IN ACCORDANCE WITH (B). THOSE EXISTING CONSTRUCTION ACTIVITIES THAT HAVE MET THE SAMPLING REQUIRED BY (B) ABOVE SHALL NOT BE REQUIRED TO CONDUCT ADDITIONAL SAMPLING OTHER THAN AS REQUIRED BY (C) ABOVE.

*NOTE THAT THE PERMITTEE MAY CHOOSE TO MEET THE REQUIREMENTS OF (A) AND (B) ABOVE BY COLLECTING TURBIDITY SAMPLES FROM ANY RAIN EVENT THAT REACHES OR EXCEEDS 0.5 INCH AND ALLOWS FOR SAMPLING AT ANY TIME OF THE DAY OR WEEK.

REPORTING OF SAMPLING
(31)

REQUIREMENTS FOR REPORTING OF SAMPLING POINTS ARE LISTED BELOW IN ACCORDANCE WITH PART IV. E OF THE GAR 100001 STAND-ALONE PERMIT.

1. THE APPLICABLE PERMITTEES ARE REQUIRED TO SUBMIT THE SAMPLING RESULTS TO THE EPD AT THE ADDRESS SHOWN IN PART II.C. BY THE FIFTEENTH DAY OF THE MONTH FOLLOWING THE REPORTING PERIOD. REPORTING PERIODS ARE MONTHS DURING WHICH SAMPLES ARE TAKEN IN ACCORDANCE WITH THIS PERMIT. SAMPLING RESULTS SHALL BE IN A CLEARLY LEGIBLE FORMAT. UPON WRITTEN NOTIFICATION, EPD MAY REQUIRE THE APPLICABLE PERMITTEE TO SUBMIT THE SAMPLING RESULTS ON A MORE FREQUENT BASIS. SAMPLING AND ANALYSIS OF ANY STORMWATER DISCHARGE(S) OR THE RECEIVING WATER(S) BEYOND THE MINIMUM FREQUENCY STATED IN THIS PERMIT MUST BE REPORTED IN A SIMILAR MANNER TO THE EPD. THE SAMPLING REPORTS MUST BE SIGNED IN ACCORDANCE WITH PART V.G.2 SAMPLING REPORTS MUST BE SUBMITTED TO EPD UNTIL SUCH TIME AS A NOT IS SUBMITTED IN ACCORDANCE WITH PART VI.

1. ALL SAMPLING REPORTS SHALL INCLUDE THE FOLLOWING INFORMATION:
   a. THE RAINFALL AMOUNT, DATE, EXACT PLACE AND TIME OF SAMPLING OR MEASUREMENTS
   b. THE NAME(S) OF THE CERTIFIED PERSONNEL WHO PERFORMED THE SAMPLING AND MEASUREMENTS
   c. THE DATE(S) ANALYSES WERE PERFORMED
   d. THE TIME(S) ANALYSES WERE INITIATED
   e. THE NAME(S) OF THE CERTIFIED PERSONNEL WHO PERFORMED THE ANALYSES
   f. REFERENCES AND WRITTEN PROCEDURES, WHEN AVAILABLE, FOR THE ANALYTICAL TECHNIQUES OR METHODS USED
   g. THE RESULTS OF SUCH ANALYSES, INCLUDING THE BENCH SHEETS, INSTRUMENT READOUTS, COMPUTER DISKS OR TAPES, ETC., USED TO DETERMINE THESE RESULTS
   h. RESULTS WHICH EXCEED 1000 NTU SHALL BE REPORTED AS "EXCEEDS 1000 NTU" AND
   i. CERTIFICATION STATEMENT THAT SAMPLING WAS CONDUCTED AS PER THE PLAN
3. ALL WRITTEN CORRESPONDENCE REQUIRED BY THIS PERMIT SHALL BE SUBMITTED BY RETURN RECEIPT CERTIFIED MAIL (OR SIMILAR SERVICE) TO THE APPROPRIATE DISTRICT OFFICE OF THE EPD ACCORDING TO THE SCHEDULE IN APPENDIX A OF THIS PERMIT. THE PERMITTEE SHALL RETAIN A COPY OF THE PROOF OF SUBMITTAL AT THE CONSTRUCTION SITE OR THE PROOF OF SUBMITTAL SHALL BE READILY AVAILABLE AT A DESIGNATED LOCATION FROM COMMENCEMENT OF CONSTRUCTION UNTIL SUCH TIME AS A NOT IS SUBMITTED IN ACCORDANCE WITH PART VI.

   IF AN ELECTRONIC SUBMITTAL IS PROVIDED BY EPD THEN THE WRITTEN CORRESPONDENCE MAY BE SUBMITTED ELECTRONICALLY. IF REQUIRED, A PAPER COPY MUST ALSO BE SUBMITTED BY RETURN RECEIPT CERTIFIED MAIL OR SIMILAR SERVICE.
   MOUNTAIN DISTRICT - ATLANTA SATELLITE
   GEORGIA ENVIRONMENTAL PROTECTION DIVISION
   4244 INTERNATIONAL PARKWAY, SUITE 114
   ATLANTA, GA 30354-3906
   404-362-2671

Menefee Architecture | Architecture Planning Design
1075 Brady Ave NW Atlanta GA 30318 | t 404.876.1011

GEORGIA REGISTERED No. PE036701 PROFESSIONAL ENGINEER KYLE WATSON WEBB

COPYRIGHT

This drawing and all reproductions copyrighted and the property of Menefee Architecture LLC and may not be used in any without their permission.

COPYRIGHT 2018

ROME TENNIS INDOOR FACILITY
Rome, Georgia

DRAWN BY	CHECKED BY
BAM	KWW

DATE: 2019-02-15

REVISIONS	
NUMBER	DATE

TITLE: ES&PC NOTES

PROJECT NUMBER: 201811

SHEET NUMBER: C400

75% CONSTRUCTION DOCUMENTS 2/15/2019

BREEDLOVE LAND PLANNING
Landscape Architects • Civil Engineers
www.landplanning.net

21 N.P.D.E.S. IMPAIRED STREAM MAP (1 MILE RADIUS FROM SITE LIMITS) - SCALE: N.T.S. 22

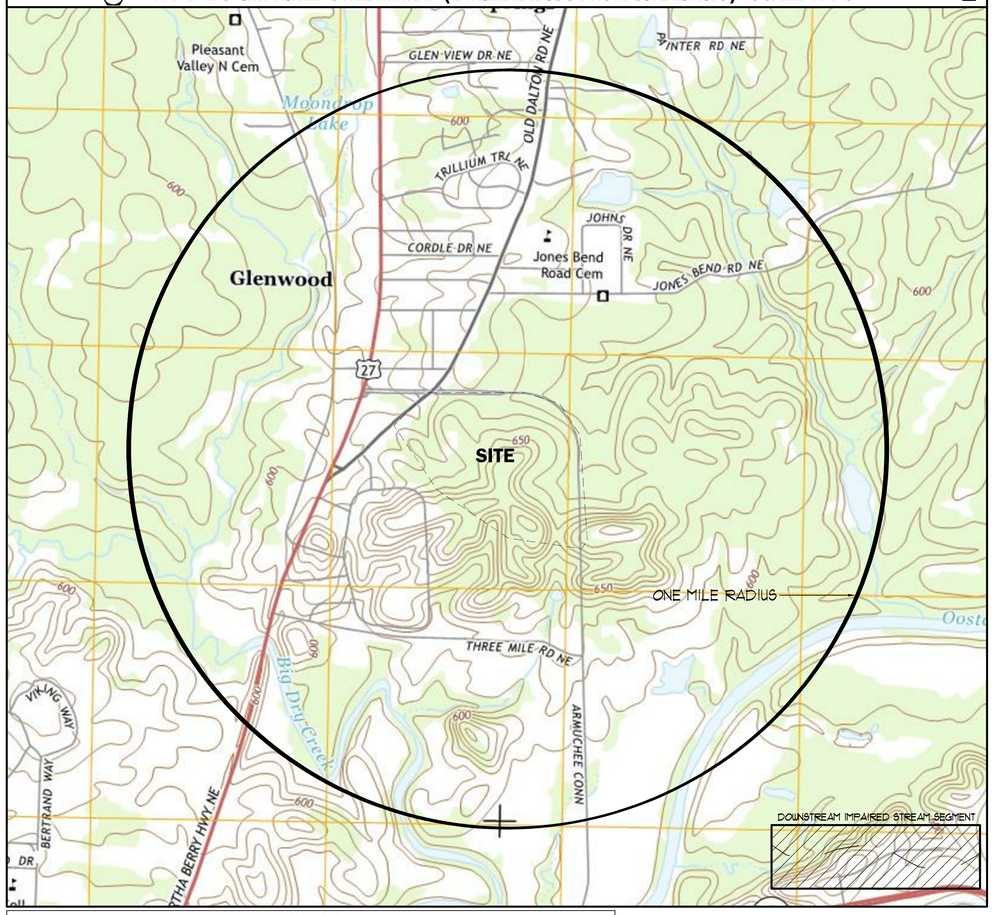

N.R.C.S. SOIL MAP 47

SOIL SERIES PROVIDED BELOW HAVE BEEN DOCUMENTED THROUGH NRCS WEB SOIL SURVEY. ALL SOILS WITHIN THE LIMITS OF WORK ARE UTC2 (URBAN LAND-CECIL COMPLEX, 2 TO 10% SLOPES.

Hydrologic Soil Group— Summary by Map Unit — Chattooga, Floyd, and Polk Counties, Georgia (GA621)				
Map unit symbol	Map unit name	Rating	Acres in AOI	Percent of AOI
Ck	Chewacla silt loam	B/D	0.8	1.0%
CnB	Conasauga silt loam, 1 to 6 percent slopes	D	25.0	29.1%
EtB	Etowah loam, 2 to 6 percent slopes	B	3.7	4.3%
TnC	Townley silt loam, 2 to 10 percent slopes	D	32.1	37.4%
TnE	Townley silt loam, 10 to 25 percent slopes	D	18.2	21.2%
Tu	Tupelo silt loam, 0 to 3 percent slopes	C/D	2.0	2.3%
Tv	Tupelo clay loam, frequently flooded	C/D	4.1	4.7%
Totals for Area of Interest			86.0	100.0%

NTU LIMIT RATIONALE 34

REFER TO APPENDIX "B" WITHIN THE NPDES GAR 000001 PERMIT FOR NTU LIMIT CHART BASED ON STREAM TYPE SUPPORTING WARM WATER FISHERIES OR TROUT STREAMS.

SIZE OF CONSTRUCTION SITE: 2.10 ACRES

SURFACE WATER DRAINAGE AREA: 0-4.99 SQUARE MILES

TYPE OF RECEIVING WATER: SUPPORTING WARM WATER FISHERIES

APPENDIX B
Nephelometric Turbidity Unit (NTU) TABLES
Warm Water (Supporting Warm Water Fisheries)
Surface Water Drainage Area, square miles

Site Size (acres)	0-4.99	5-9.99	10-24.99	25-49.99	50-99.99	100-249.99	250-499.99	500+
1.00-10	75	150	200	400	750	750	750	750
10.01-25	50	100	100	200	300	500	750	750
25.01-50	50	50	100	100	200	300	750	750
50.01-100	50	50	50	100	100	150	300	600
100.01+	50	50	50	50	50	100	200	100

To use these tables, select the size (acres) of the construction site. Then, select the surface water drainage area (square miles). The NTU matrix value arrived at from the above tables is the one to use in Part III.D.4.

PRE- vs. POST RUNOFF 45

REFER TO STORMWATER MANAGEMENT REPORT FOR DETAILED ANALYSIS OF PRE-DEVELOPED RUNOFF CONDITIONS, POST-DEVELOPED RUNOFF CONDITIONS, AND CONTROLS DESIGNED TO CHANGES IN SITE CONDITIONS DUE TO DEVELOPMENT (I.E. WATER QUALITY, CHANNEL PROTECTION, AND / OR DETENTION).

PRE-DEVELOPED RUNOFF COEFFICIENT (CURVE NUMBER): 55

POST-DEVELOPED RUNOFF COEFFICIENT (CURVE NUMBER): 65

SUMMARY OF POST-DEVELOPMENT STORMWATER CONTROLS USED:
PERMEABLE PAVERS WITH STONE STORAGE BENEATH WILL BE UTILIZED TO PROVIDE RUNOFF REDUCTION FOR THE FIRST 1.0" OF RAINFALL FOR THE DEVELOPED AREA. EXISTING PONDS WITHIN THE LIMITS OF THE GOLF COURSE SITE WILL CONTINUE TO CAPTURE RUNOFF AND PROVIDE DETENTION (AS IN EXISTING CONDITIONS) PRIOR TO DISCHARGING TO THE EXISTING DETENTION FACILITIES PREVIOUSLY DESIGNED TO PROVIDE WATER QUALITY, CHANNEL PROTECTION, AND DETENTION WILL BE UTILITIZED TO MANAGE STORMWATER FROM THE PROPOSED DEVELOPMENT. PREVIOUS HYDROLOGY STUDY PLANNED FOR FUTURE IMPERVIOUS NOW BEING CONSTRUCTED WITH THIS PROJECT.

APPENDIX 1

THE ES&PC PLAN MUST INCLUDE AT LEAST FOUR (4) OF THE FOLLOWING BMPS FOR THOSE AREAS OFTHE SITE WHICH DISCHARGE TO A IMPAIRED STREAM SEGMENT AND FOR SITES WHICH EPD HASAPPROVED IN WRITING A REQUEST TO DISTURB 50 ACRES OR MORE AT ANY ONE TIME.

THE FOUR ITEMS CHOSEN MUST BE APPROPRIATE FOR THE SITE CONDITIONS.

BMP IDENTIFIER	INCLUDED (Y/N)	PAGE #	DESCRIPTION
A	-	-	DURING CONSTRUCTION ACTIVITIES, DOUBLE THE WIDTH OF THE 25 FOOT UNDISTURBED VEGETATED BUFFER ALONG ALL STATE WATERS REQUIRING A BUFFER AND THE 50 FOOT UNDISTURBED VEGETATED BUFFER ALONG ALL STATE WATERS CLASSIFIED AS "TROUT STREAMS" REQUIRING A BUFFER. DURING CONSTRUCTION ACTIVITIES, EPD WILL NOT GRANT VARIANCES TO ANY SUCHBUFFERS THAT ARE INCREASED IN WIDTH.
B	-	-	INCREASE ALL TEMPORARY SEDIMENT BASINS AND RETROFITTED STORM WATER MANAGEMENT BASINS TO PROVIDE SEDIMENT STORAGE OF AT LEAST 3600 CUBIC FEET (134 CUBIC YARDS) PER ACRE DRAINED.
C	-	-	USE BAFFLES IN ALL TEMPORARY SEDIMENT BASINS AND RETROFITTED STORM WATER MANAGEMENT BASINS TO AT LEAST DOUBLE THE CONVENTIONAL FLOW PATH LENGTH TO THE OUTLET STRUCTURE.
D	-	-	A LARGE SIGN (MINIMUM 4 FEET X 8 FEET) MUST BE ON THE SITE ON THE ACTUAL START DATE OF CONSTRUCTION VISIBLE FROMA PUBLIC ROADWAY IDENTIFYING THE CONSTRUCTION SITE, THE PERMITTEE(S), AND THE CONTACT PERSON(S) AND TELEPHONE NUMBER(S) UNTIL A NOT HAS BEEN SUBMITTED.
E	-	-	USE ANIONIC POLYACRYLAMIDE (PAM) AND/OR MULCH TO STABILIZE AREAS LEFT DISTURBED FOR MORE THAN SEVEN (7)CALENDAR DAYS IN ACCORDANCE WITH PART III. D.1. OF THE NPDES PERMIT.
F	-	-	CONDUCT TURBIDITY SAMPLING AFTER EVERY RAIN EVENT OF 0.5 INCH OR GREATER WITHIN ANY 24 HOUR PERIOD,RECOGNIZING THE EXCEPTIONS SPECIFIED IN PART IV.D.6.D. OF THE NPDES PERMITS.
G	-	-	COMPLY WITH THE APPLICABLE END-OF-PIPE TURBIDITY EFFLUENT LIMIT, WITHOUT THE "BMP DEFENSE" AS PROVIDED FOR INO.C.G.A. 12-7-6 (A)(1).
H	-	-	REDUCE THE TOTAL PLANNED SITE DISTURBANCE TO LESS THAN 50% IMPERVIOUS SURFACES (EXCLUDING ANY STATE-MANDATED BUFFER AREAS FROM SUCH CALCULATIONS), ALL CALCULATIONS MUST BE INCLUDED ON THE PLAN.
I	-	-	LIMIT THE AMOUNT OF DISTURBED AREA AT ANY ONE TIME TO NO GREATER THAN 25 ACRES OR 50% OF THE TOTAL PLANNEDSITE, WHICHEVER IS LESS. ALL CALCULATIONS MUST BE INCLUDED ON THE PLAN.
J	-	-	USE "DIRT II" TECHNIQUES AVAILABLE ON THE EPD WEBSITE, WWW.GAEPD.ORG (E.G., SEEP BERMS, SAND FILTERS, ANIONIC PAM) TO MODEL AND MANAGE CONSTRUCTION STORM WATER RUNOFF (INCLUDING SHEET FLOW). ALL CALCULATIONS MUST BE INCLUDED ON THE PLAN.
K	-	-	ADD APPROPRIATE ORGANIC SOIL AMENDMENTS (E.G., COMPOST) AND CONDUCT PRE- AND POST-CONSTRUCTION SOIL SAMPLING TO A DEPTH OF SIX (6) INCHES TO DOCUMENT IMPROVED LEVELS OF SOIL CARBON AFTER FINAL STABILIZATION OF THE CONSTRUCTION SITE.
L	-	-	USE MULCH FILTER BERMS, IN ADDITION TO A SILT FENCE, ON THE SITE PERIMETER WHEREVER CONSTRUCTION STORM WATER (INCLUDING SHEET FLOW) MAY BE DISCHARGED. MULCH FILTER BERMS CANNOT BE PLACED IN WATERWAYS OR AREAS OF CONCENTRATED FLOW.
M	-	-	APPLY THE APPROPRIATE GEORGIA DEPARTMENT OF TRANSPORTATION APPROVED EROSION CONTROL MATTING OR BLANKETS OR BONDED FIBER MATRIX TO ALL SLOPES STEEPER THAN 3:1. ALL GRAPHICAL ILLUSTRATIONS MUST BE INCLUDED ON THE PLAN.
N	-	-	USE APPROPRIATE EROSION CONTROL MATTING OR BLANKETS INSTEAD OF CONCRETE IN ALL CONSTRUCTION STORM WATER DITCHESAND STORM DRAINAGES DESIGNED FOR A 25 YEAR, 24 HOUR RAINFALL EVENT.
O	-	-	USE ANIONIC PAM UNDER A PASSIVE DOSING METHOD (E.G., FLOCCULANT BLOCKS) WITHIN CONSTRUCTION STORM WATERDITCHES AND STORM DRAINAGES THAT FEED INTO TEMPORARY SEDIMENT BASINS AND RETROFITTED MANAGEMENT BASINS.
P	-	-	INSTALL SOD FOR A MINIMUM 20 FOOT WIDTH (IN LIEU OF SEEDING) AFTER FINAL GRADE HAS BEEN ACHIEVED, ALONG THE SITE PERIMETER WHEREVER STORM WATER (INCLUDING SHEET FLOW) MAY BE DISCHARGED.
Q	-	-	CONDUCT SOIL TESTS TO IDENTIFY AND TO IMPLEMENT SITE-SPECIFIC FERTILIZER NEEDS.
R	-	-	CERTIFIED PERSONNEL FOR PRIMARY PERMITTEES SHALL CONDUCT INSPECTIONS AT LEAST TWICE EVERY SEVEN (7) CALENDAR DAYS AND WITHIN 24 HOURS OF THE END OF THE STORM THAT IS 0.5 INCHES RAINFALL OR GREATER IN ACCORDANCE WITH PART IV.D.4.A.(3),(A) – (C); SECONDARY PERMITTEES, PART IV.D.4.B.(3), (A) – (C); AND TERTIARY PERMITTEES PART IV.D.4.C.(3),(A) – (C).
S	-	-	APPLY THE APPROPRIATE COMPOST BLANKETS (MINIMUM DEPTH 1.5 INCHES) TO PROTECT SOIL SURFACES UNTIL VEGETATION ISESTABLISHED DURING THE FINAL STABILIZATION PHASE OF THE CONSTRUCTION ACTIVITY.
T	-	-	USE ALTERNATIVE BMPS WHOSE PERFORMANCE HAS BEEN DOCUMENTED TO BE SUPERIOR TO CONVENTIONAL BMPS AS CERTIFIED BY ADESIGN PROFESSIONAL (UNLESS DISAPPROVED BY EPD OR THE STATE SOIL AND WATER CONSERVATION COMMISSION), (IF USING THIS ITEM PLEASE REFER TO THE ALTERNATIVE BMP GUIDANCE DOCUMENT FOUND AT WWW.GASWCC.GEORGIA.GOV)
U	-	-	LIMIT THE TOTAL PLANNED SITE DISTURBANCE TO LESS THAN 15% IMPERVIOUS SURFACES (EXCLUDING ANY STATE MANDATED BUFFER AREAS FROM SUCH CALCULATIONS). ALL CALCULATIONS MUST BE INCLUDED IN THE PLAN.

Effective January 1, 2018

IMPAIRED STREAM SEGMENT 22

THIS SITE WILL [WILL NOT] DISCHARGE STORM WATER FROM ANY CONSTRUCTION ACTIVITY INTO AN IMPAIRED STREAM SEGMENT, OR WITHIN 1 LINEAR MILE UPSTREAM OF AND WITHIN THE SAME WATERSHED AS, ANY PORTION OF A BIOTA IMPAIRED STREAM SEGMENT.

IF ANY STORM WATER ASSOCIATED WITH CONSTRUCTION ACTIVITIES DISCHARGED INTO AN IMPAIRED STREAM SEGMENT THAT HAS BEEN LISTED FOR THE CRITERIA VIOLATED, B/O "F" (IMPAIRED FISH COMMUNITY) AND / OR "B/O M" (IMPAIRED MACROVERTIBRATE COMMUNITY) WITHIN CATEGORY 4A, 4B, OR 5, AND THE POTENTIAL CAUSE IS EITHER "NPS" (NONPOINT SOURCE) OR "UR" (URBAN RUNOFF) THE ES&PC PLAN MUST INCLUDE AT LEAST FOUR (4) OF THE BMPS LISTED IN PART III.C.2 (A) THRU (T) OF THE PERMIT.

THE NEAREST IMPAIRED STREAM DOWNSTREAM OF THE PROJECT SITE IS THE BIG DRY CREEK, BUT SEGMENT IS BEYOND THE LIMITS OF THIS PROJECT

TMDL IMPLEMENTATION PLAN 23

A TMDL IMPLEMENTATION PLAN HAS [HAS NOT] BEEN FINALIZED FOR THE IMPAIRED STREAM SEGMENT (IDENTIFIED IN CHECKLIST ITEM #22) AT LEAST SIX MONTHS PRIOR TO SUBMITTAL OF NOTICE OF INTENT.

THE ES&PC PLAN MUST ADDRESS ANY SITE-SPECIFIC CONDITIONS OR REQUIREMENTS INCLUDED IN THE TMDL IMPLEMENTATION PLAN.

GSWCC LEVEL 2 CERTIFICATIONS

I CERTIFY UNDER PENALTY OF LAW THAT THIS PLAN WAS PREPARED AFTER A SITE VISIT TO THE LOCATIONS DESCRIBED HEREIN BY MYSELF OR MY AUTHORIZED AGENT, UNDER MY SUPERVISION.

I CERTIFY THAT THE PERMITTEE'S EROSION, SEDIMENTATION AND POLLUTION CONTROL PLAN PROVIDES FOR AN APPROPRIATE AND COMPREHENSIVE SYSTEM OF BEST MANAGEMENT PRACTICES REQUIRED BY THE GEORGIA WATER QUALITY CONTROL ACT AND THE DOCUMENT "MANUAL FOR EROSION AND SEDIMENT CONTROL IN GEORGIA" (MANUAL) PUBLISHED BY THE STATE SOIL AND WATER CONSERVATION COMMISSION AS OF JANUARY 1 OF THE YEAR IN WHICH THE LAND-DISTURBING ACTIVITY WAS PERMITTED, PROVIDES FOR THE SAMPLING OF THE RECEIVING WATER(S) OR THE SAMPLING OF THE STORM WATER OUTFALLS AND THAT THE DESIGNED SYSTEM OF BEST MANAGEMENT PRACTICES AND SAMPLING METHODS IS EXPECTED TO MEET THE REQUIREMENTS CONTAINED IN THE GENERAL NPDES PERMIT NO. GAR 000001.

SIGNED: DATE: 07-08-2019

CERTIFIED DESIGN PROFESSIONAL: KYLE WEBB
GSWCC CERTIFICATION NO. LEVEL II # 0000007297
EXPIRATION DATE: 12-19-2020
COMPANY: BREEDLOVE LAND PLANNING, INC.

2 12 13

RETENTION OF RECORDS 32

REQUIREMENTS FOR REPORTING OF SAMPLING POINTS ARE LISTED BELOW IN ACCORDANCE WITH PART IV. F OF THE GAR 000001 STAND-ALONE PERMIT.

F. RETENTION OF RECORDS

1. THE PRIMARY PERMITTEE SHALL RETAIN THE FOLLOWING RECORDS AT THE CONSTRUCTION SITE OR THE RECORDS SHALL BE READILY AVAILABLE AT A DESIGNATED ALTERNATE LOCATION FROM COMMENCEMENT OF CONSTRUCTION UNTIL SUCH TIME AS A NOT IS SUBMITTED IN ACCORDANCE WITH PART VI:
   - a. A COPY OF ALL NOTICES OF INTENT SUBMITTED TO EPD
   - b. A COPY OF THE EROSION, SEDIMENTATION AND POLLUTION CONTROL PLAN REQUIRED BY THIS PERMIT
   - c. THE DESIGN PROFESSIONAL'S REPORT OF THE RESULTS OF THE INSPECTION CONDUCTED IN ACCORDANCE WITH PART IV.A.9. OF THIS PERMIT
   - d. A COPY OF ALL SAMPLING INFORMATION, RESULTS, AND REPORTS REQUIRED BY THIS PERMIT
   - e. A COPY OF ALL INSPECTION REPORTS GENERATED IN ACCORDANCE WITH PART IV.D.4.A. OF THIS PERMIT
   - f. A COPY OF ALL VIOLATION SUMMARIES AND VIOLATION SUMMARY REPORTS GENERATED IN ACCORDANCE WITH PART III.D.2. OF THIS PERMIT AND
   - g. DAILY RAINFALL INFORMATION COLLECTED IN ACCORDANCE WITH PART IV.D.4.A.(2) OF THIS PERMIT.
2. COPIES OF ALL NOTICES OF INTENT, NOTICES OF TERMINATION, INSPECTION REPORTS, SAMPLING REPORTS, (INCLUDING ALL CALIBRATION AND MAINTENANCE RECORDS AND ALL ORIGINAL STRIP CHART RECORDINGS FOR CONTINUOUS MONITORING INSTRUMENTATION) OR OTHER REPORTS REQUESTED BY THE EPD, EROSION, SEDIMENTATION AND POLLUTION CONTROL PLANS, RECORDS OF ALL DATA USED TO COMPLETE THE NOTICE OF INTENT TO BE COVERED BY THIS PERMIT AND ALL OTHER RECORDS REQUIRED BY THIS PERMIT SHALL BE RETAINED BY THE PERMITTEE WHO EITHER PRODUCED OR USED IT FOR A PERIOD OF AT LEAST THREE YEARS FROM THE DATE THAT THE NOT IS SUBMITTED IN ACCORDANCE WITH PART VI OF THIS PERMIT. THESE RECORDS MUST BE MAINTAINED AT THE PERMITTEE'S PRIMARY PLACE OF BUSINESS OR AT A DESIGNATED ALTERNATIVE LOCATION ONCE THE CONSTRUCTION ACTIVITY HAS CEASED AT THE PERMITTED SITE. THIS PERIOD MAY BE EXTENDED BY REQUEST OF THE EPD AT ANY TIME UPON WRITTEN NOTIFICATION TO THE PERMITTEE.

SAMPLE METHODS 33

b. SAMPLING TYPES
   ALL SAMPLING SHALL BE COLLECTED BY "GRAB SAMPLES" AND THE ANALYSIS OF THESE SAMPLES SHALL BE CONDUCTED IN ACCORDANCE WITH METHODOLOGY AND TEST PROCEDURES ESTABLISHED BY 40 CFR PART 136 (UNLESS OTHER TEST PROCEDURES HAVE BEEN APPROVED). THE GUIDANCE DOCUMENT TITLED "NPDES STORMWATER SAMPLING GUIDANCE DOCUMENT, EPA 833-B-92-001" AND GUIDANCE DOCUMENTS THAT MAY BE PREPARED BY THE EPD.
   1. SAMPLE CONTAINERS SHALL BE LABELED PRIOR TO COLLECTING THE SAMPLES.
   2. SAMPLES SHOULD BE WELL MIXED BEFORE TRANSFERRING TO A SECONDARY CONTAINER.
   3. LARGE MOUTH, WELL CLEANED AND RINSED GLASS OR PLASTIC JARS SHALL BE USED FOR COLLECTING SAMPLES. THE JARS SHALL BE CLEANED THOROUGHLY TO AVOID CONTAMINATION.
   4. MANUAL, AUTOMATIC OR RISING STAGE SAMPLING MAY BE UTILIZED. SAMPLES REQUIRED BY THIS PERMIT SHALL BE ANALYZED IMMEDIATELY, BUT IN NO CASE LATER THAN 48 HOURS AFTER COLLECTION. HOWEVER, SAMPLES FROM AUTOMATIC SAMPLERS SHALL BE COLLECTED NO LATER THAN THE NEXT BUSINESS DAY AFTER THEIR ACCUMULATION, UNLESS FLOW THROUGH AUTOMATED ANALYSIS IS UTILIZED. IF AUTOMATIC SAMPLING IS UTILIZED AND THE AUTOMATIC SAMPLER IS NOT ACTIVATED DURING THE QUALIFYING EVENT, THE PERMITTEE MUST UTILIZE MANUAL SAMPLING OR RISING STAGE SAMPLING DURING THE NEXT QUALIFYING EVENT. DILUTION OF THE SAMPLES IS NOT REQUIRED. SAMPLES MAY BE ANALYZED DIRECTLY WITH A PROPERLY CALIBRATED TURBIDIMETER. SAMPLES ARE NOT REQUIRED TO BE COOLED.
   5. SAMPLING AND ANALYSIS OF THE RECEIVING WATER(S) OR OUTFALLS BEYOND THE MINIMUM FREQUENCY STATED IN THIS PERMIT MUST BE REPORTED TO EPD AS SPECIFIED IN PART IV.E.
c. SAMPLING POINTS
   1. FOR CONSTRUCTION ACTIVITIES THE PRIMARY PERMITTEE MUST SAMPLE MUST SAMPLE ALL RECEIVING WATER(S), OR ALL OUTFALL(S), OR A COMBINATION OF RECEIVING WATER(S) AND OUTFALL(S). SAMPLES TAKEN FOR THE PURPOSE OF COMPLIANCE WITH THIS PERMIT SHALL BE REPRESENTATIVE OF THE MONITORED ACTIVITY AND REPRESENTATIVE OF THE WATER QUALITY OF THE RECEIVING WATER(S) AND/OR THE STORMWATER OUTFALLS USING THE FOLLOWING MINIMUM GUIDELINES:
      - 1a. THE UPSTREAM SAMPLE FOR EACH RECEIVING WATER(S) MUST BE TAKEN IMMEDIATELY UPSTREAM OF THE CONFLUENCE OF THE FIRST STORMWATER DISCHARGE FROM THE PERMITTED ACTIVITY (I.E., THE DISCHARGE FARTHEST UPSTREAM AT THE SITE) BUT DOWNSTREAM OF ANY OTHER STORMWATER DISCHARGES NOT ASSOCIATED WITH THE PERMITTED ACTIVITY. WHERE APPROPRIATE, SEVERAL UPSTREAM SAMPLES FROM ACROSS THE RECEIVING WATER(S) MAY NEED TO BE TAKEN AND THE ARITHMETIC AVERAGE OF THE TURBIDITY OF THESE SAMPLES USED FOR THE UPSTREAM TURBIDITY VALUE.
      - 1b. THE DOWNSTREAM SAMPLE FOR EACH RECEIVING WATER(S) MUST BE TAKEN DOWNSTREAM OF THE CONFLUENCE OF THE LAST STORMWATER DISCHARGE FROM THE PERMITTED ACTIVITY (I.E., THE DISCHARGE FARTHEST DOWNSTREAM AT THE SITE) BUT UPSTREAM OF ANY OTHER STORMWATER DISCHARGE NOT ASSOCIATED WITH THE PERMITTED ACTIVITY. WHERE APPROPRIATE, SEVERAL DOWNSTREAM SAMPLES FROM ACROSS THE RECEIVING WATER(S) MAY NEED TO BE TAKEN AND THE ARITHMETIC AVERAGE OF THE TURBIDITY OF THESE SAMPLES USED FOR THE DOWNSTREAM TURBIDITY VALUE.
      - 1c. IDEALLY THE SAMPLES SHOULD BE TAKEN FROM THE HORIZONTAL AND VERTICAL CENTER OF THE RECEIVING WATER(S) OR THE STORMWATER OUTFALL CHANNEL(S).
      - 1d. CARE SHOULD BE TAKEN TO AVOID STIRRING THE BOTTOM SEDIMENTS IN THE RECEIVING WATER(S) OR IN THE OUTFALL STORMWATER CHANNEL.
      - 1e. THE SAMPLING CONTAINER SHOULD BE HELD SO THAT THE OPENING FACES UPSTREAM.
      - 1f. THE SAMPLES SHOULD BE KEPT FREE FROM FLOATING DEBRIS.
      - 1g. PERMITTEES DO NOT HAVE TO SAMPLE SHEET FLOW THAT FLOWS ONTO UNDISTURBED NATURAL AREAS OR AREAS STABILIZED BY THE PROJECT. FOR PURPOSES OF THIS SECTION, STABILIZED SHALL MEAN, FOR UNPAVED AREAS AND AREAS NOT COVERED BY PERMANENT STRUCTURES AND AREAS LOCATED OUTSIDE THE WASTE DISPOSAL LIMITS OF A LANDFILL CELL THAT HAS BEEN CERTIFIED BY EPD FOR WASTE DISPOSAL, 100% OF THE SOIL SURFACE IS UNIFORMLY COVERED IN PERMANENT VEGETATION WITH A DENSITY OF 70% OR GREATER, OR LANDSCAPED ACCORDING TO THE PLAN (UNIFORMLY COVERED WITH LANDSCAPING MATERIALS IN PLANNED LANDSCAPED AREAS) OR EQUIVALENT PERMANENT STABILIZATION MEASURES AS DEFINED IN THE MANUAL (EXCLUDING A CROP OF ANNUAL VEGETATION AND A SEEDING OF TARGET CROP PERENNIALS APPROPRIATE FOR THE REGION).
      - 1h. ALL SAMPLING PURSUANT TO THIS PERMIT MUST BE DONE IN SUCH A WAY (INCLUDING GENERALLY ACCEPTED SAMPLING METHODS, LOCATIONS, TIMING, AND FREQUENCY) AS TO ACCURATELY REFLECT WHETHER STORMWATER RUNOFF FROM THE CONSTRUCTION SITE IS IN COMPLIANCE WITH THE STANDARD SET FORTH IN PARTS III.D.3. OR III.D.4., WHICHEVER IS APPLICABLE.

Menefee Architecture | Architecture Planning Design
1075 Brady Ave NW Atlanta GA 30318 | t 404.876.1011

GEORGIA REGISTERED No. PE036701 PROFESSIONAL ENGINEER KYLE WATSON WEBB

COPYRIGHT

This drawing and all reproductions copyrighted and the property of Menefee Architecture LLC and may not be used in any without their permission.

COPYRIGHT 2018

ROME TENNIS INDOOR FACILITY

Rome, Georgia

DRAWN BY	CHECKED BY
BAM	KWW

DATE
2019-02-15

REVISIONS	
NUMBER	DATE

TITLE
ES&PC NOTES

PROJECT NUMBER
201811

SHEET NUMBER
C401

BREEDLOVE LAND PLANNING
Landscape Architects • Civil Engineers
www.landplanning.net

75% CONSTRUCTION DOCUMENTS 2/15/2019

EROSION NARRATIVE

36

EROSION CONTROL MEASURES SHALL BE PROVIDED TO PROTECT THE SITE FROM SOIL LOSS AND TO PROTECT DOWNSTREAM CHANNELS, PONDS, AND PROPERTIES FROM SOIL MIGRATION INTO AND EROSION OF DOWNSTREAM CHANNELS.

INITIAL PHASE OF EROSION SHALL CONSIST OF INLET PROTECTION AROUND EXISTING STORM STRUCTURES AND PERIMETER SILT FENCE OR COMPOST FILTER SOCKS.

INTERMEDIATE PHASE OF EROSION CONTROL SHALL CONSIST OF TEMPORARY SEDIMENT TRAPS AT STORM INLETS AND TEMPORARY STABILIZATION OF THE SITE AS SOON AS POSSIBLE TO PREVENT EROSION. NO MASS GRADING WILL BE REQUIRED FOR CONSTRUCTION OF THE PROPOSED BUILDING, BUT CONTRACTOR SHALL SEQUENCE WORK WHICH CREATES DISTURBANCE IN A MANNER WHICH MINIMIZES TIME OF EXPOSURE PRIOR TO FOUNDATION CONSTRUCTION. EXISTING POND WILL BE UTILIZED TO PROVIDE SEDIMENT STORAGE AS REQUIRED FOR THIS PROJECT AND BE CLEANED OF ALL SEDIMENT AND DEBRIS AT THE END OF CONSTRUCTION. CONTRACTOR SHALL ANTICIPATED DAILY INSPECTION OF BMPS AND WEEKLY MAINTENANCE AS REQUIRED.

FINAL PHASE OF EROSION CONTROL SHALL CONSIST OF A FULL STABILIZATION OF THE SITE WITH SOD (DA1) AS SHOWN DIRECTLY AROUND THE BUILDING. ALL OTHER AREAS TO BE STABILIZED WITH BERMUDA GRASS HYDROSEEDING (Ds3)

GENERAL EROSION NOTES

1. NOTIFY CITY/COUNTY INSPECTORS 24 HOURS BEFORE BEGINNING OF EVERY CONSTRUCTION PHASE.

2. ALL BUFFERS AND TREE SAVE AREAS SHALL BE CLEARLY IDENTIFIED BY FLAGGING AND/OR FENCING PRIOR TO COMMENCEMENT OF ANY LAND DISTURBANCE.

3. THE INSTALLATION OF EROSION AND SEDIMENTATION CONTROL MEASURES AND PRACTICES SHALL OCCUR PRIOR TO OR CONCURRENT WITH LAND DISTURBING ACTIVITIES AND CONSTRUCTION ON THE SITE AND MAINTAINED UNTIL PERMANENT GROUNDCOVER IS ESTABLISHED.

4. ALL SEDIMENT BARRIERS SHALL BE INSTALLED PRIOR TO ANY GRADING.

5. SEDIMENT BARRIER DEVICES SHALL BE INSPECTED AND REPAIRED OF DAMAGE DAILY. ANY ACCUMULATED SEDIMENT SHALL BE REMOVED AND SPREAD ON SITE.

6. ALL DISTURBED AREAS SHALL BE GRASSED AS SOON AS CONSTRUCTION PHASE PERMITS.

7. EROSION AND SEDIMENTATION CONTROL MEASURES SHALL BE MAINTAINED AT ALL TIMES. ADDITIONAL EROSION AND SEDIMENTATION CONTROL MEASURES SHALL BE INSTALLED IF DEEMED NECESSARY BY ON-SITE INSPECTION OR AS REQUIRED BY COUNTY.

8. MAINTENANCE OF ALL SOIL EROSION AND SEDIMENTATION CONTROL MEASURES AND PRACTICES WHETHER TEMPORARY OR PERMANENT, SHALL BE THE RESPONSIBILITY OF THE CONTRACTOR.

9. ANY DISCREPANCY BETWEEN THIS SHEET AND OTHERS IN THIS SET SHALL BE REFERRED TO THE ARCHITECT BY THE CONTRACTOR FOR CLARIFICATION BEFORE PROCEEDING WITH THE WORK.

10. SEDIMENT STORAGE LEVEL MARKERS MUST BE INSTALLED IN SEDIMENT STORAGE STRUCTURES, INDICATING THE 1/3 FULL VOLUME.

11. MAXIMUM CUT OR FILL SLOPE IS (2):1 2' HORIZONTAL TO 1' VERTICAL.

12. CONTRACTOR SHALL PROVIDE TEMPORARY DOWN DRAINS ON FILL SLOPES TO PREVENT EROSION PRIOR TO STABILIZATION.

13. CONTRACTOR SHALL REMOVE ACCUMULATED SEDIMENT FROM DETENTION BASIN AT END OF CONSTRUCTION WHEN ALL DISTURBED AREAS HAVE BEEN FULLY STABILIZED.

GSWCC LEVEL 2 CERTIFICATIONS

I CERTIFY UNDER PENALTY OF LAW THAT THIS PLAN WAS PREPARED AFTER A SITE VISIT TO THE LOCATIONS DESCRIBED HEREIN BY MYSELF OR MY AUTHORIZED AGENT, UNDER MY SUPERVISION.

I CERTIFY THAT THE PERMITTEE'S EROSION, SEDIMENTATION AND POLLUTION CONTROL PLAN PROVIDES FOR AN APPROPRIATE AND COMPREHENSIVE SYSTEM OF BEST MANAGEMENT PRACTICES REQUIRED BY THE GEORGIA WATER QUALITY CONTROL ACT AND THE DOCUMENT "MANUAL FOR EROSION AND SEDIMENT CONTROL IN GEORGIA" (MANUAL) PUBLISHED BY THE STATE SOIL AND WATER CONSERVATION COMMISSION AS OF JANUARY 1 OF THE YEAR IN WHICH THE LAND-DISTURBING ACTIVITY WAS PERMITTED, PROVIDES FOR THE SAMPLING OF THE RECEIVING WATER(S) OR THE SAMPLING OF THE STORM WATER OUTFALLS AND THAT THE DESIGNED SYSTEM OF BEST MANAGEMENT PRACTICES AND SAMPLING METHODS IS EXPECTED TO MEET THE REQUIREMENTS CONTAINED IN THE GENERAL NPDES PERMIT NO. GAR 000001.

SIGNED: DATE: 01-08-2019

CERTIFIED DESIGN PROFESSIONAL: KYLE WEBB
GSWCC CERTIFICATION NO. LEVEL II # 0000012911
EXPIRATION DATE: 12-19-2020
COMPANY: BREEDLOVE LAND PLANNING, INC.

2 12 13

GSWCC REQUIRED NOTES

THE DESIGN PROFESSIONAL WHO PREPARED THE ES&PC PLAN IS TO INSPECT THE INSTALLATION OF THE INITIAL SEDIMENT STORAGE REQUIREMENTS AND PERIMETER CONTROL BMPS WITHIN 7 DAYS AFTER INSTALLATION.

NON-EXEMPT ACTIVITIES SHALL NOT BE CONDUCTED WITHIN THE 25 OR 50-FOOT UNDISTURBED STREAM BUFFERS AS MEASURED FROM THE POINT OF WRESTED VEGETATION OR WITHIN 25 FEET OF THE COASTAL MARSHLAND BUFFER AS MEASURED FROM THE JURISDICTIONAL DETERMINATION LINE WITHOUT FIRST ACQUIRING THE NECESSARY VARIANCES AND PERMITS.

AMENDMENTS / REVISIONS TO THE ES&PC PLAN WHICH HAVE A SIGNIFICANT EFFECT ON BMPS WITH A HYDRAULIC COMPONENT MUST BE CERTIFIED BY THE DESIGN PROFESSIONAL.

WASTE MATERIALS SHALL NOT BE DISCHARGED TO WATERS OF THE STATE, EXCEPT AS AUTHORIZED BY A SECTION 404 PERMIT.

THE ESCAPE OF SEDIMENT FROM THE SITE SHALL BE PREVENTED BY THE INSTALLATION OF EROSION AND SEDIMENT CONTROL MEASURES AND PRACTICES PRIOR TO LAND DISTURBING ACTIVITIES.

EROSION CONTROL MEASURES WILL BE MAINTAINED AT ALL TIMES. IF FULL IMPLEMENTATION OF THE APPROVED PLAN DOES NOT PROVIDE FOR EFFECTIVE EROSION CONTROL, ADDITIONAL EROSION AND SEDIMENT CONTROL MEASURES SHALL BE IMPLEMENTED TO CONTROL OR TREAT THE SEDIMENT SOURCE.

ANY DISTURBED AREA LEFT EXPOSED FOR A PERIOD GREATER THAN 14 DAYS SHALL BE STABILIZED WITH MULCH OR TEMPORARY SEEDING.

14 15 17 18 19 20 21

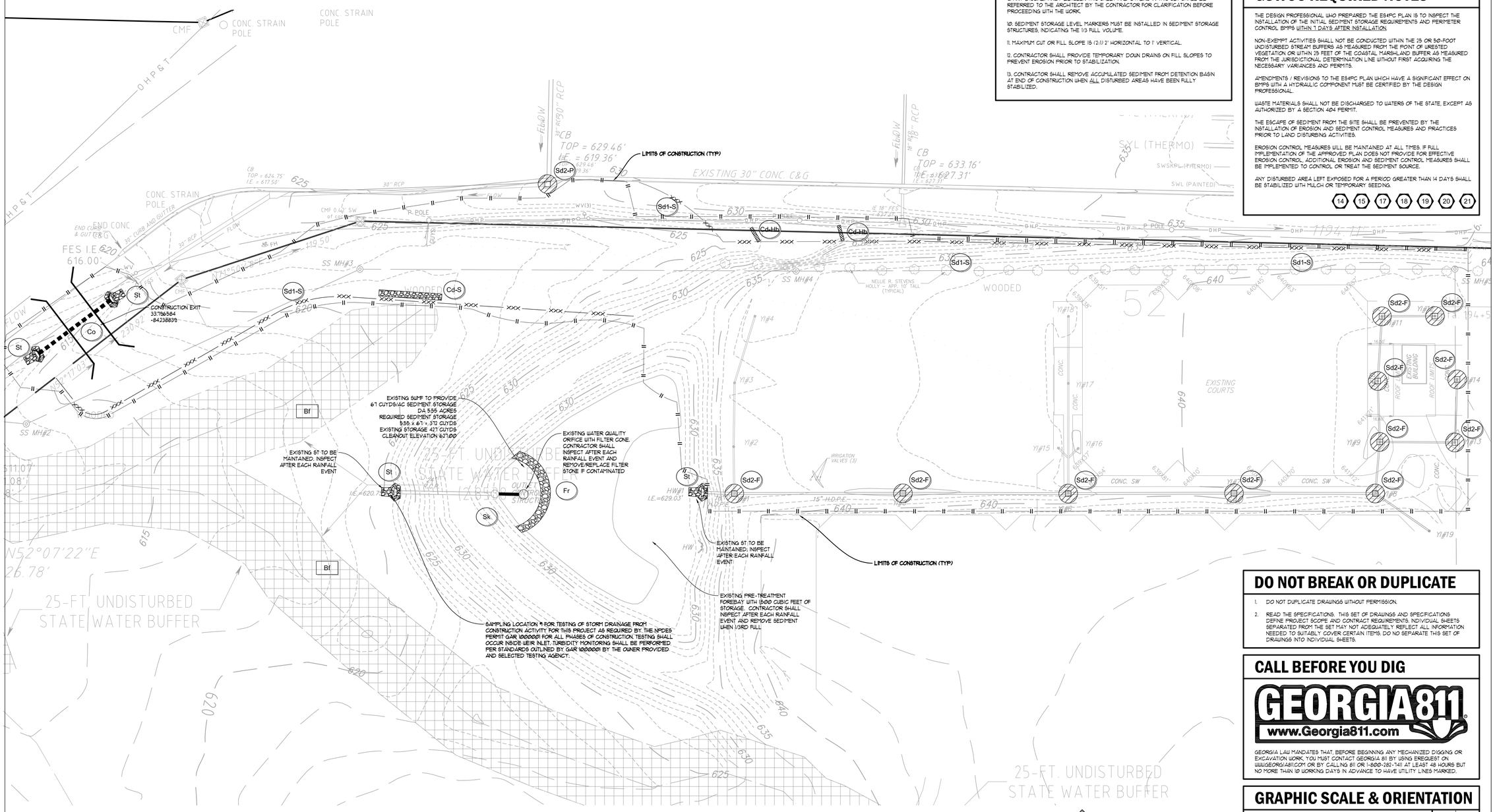

DO NOT BREAK OR DUPLICATE

1. DO NOT DUPLICATE DRAWINGS WITHOUT PERMISSION.
2. READ THE SPECIFICATIONS. THIS SET OF DRAWINGS AND SPECIFICATIONS DEFINE PROJECT SCOPE AND CONTRACT REQUIREMENTS. INDIVIDUAL SHEETS SEPARATED FROM THE SET MAY NOT ADEQUATELY REFLECT ALL INFORMATION NEEDED TO SUITABLY COVER CERTAIN ITEMS. DO NOT SEPARATE THIS SET OF DRAWINGS INTO INDIVIDUAL SHEETS.

CALL BEFORE YOU DIG

GEORGIA811
www.Georgia811.com

GEORGIA LAW MANDATES THAT, BEFORE BEGINNING ANY MECHANIZED DIGGING OR EXCAVATION WORK, YOU MUST CONTACT GEORGIA 811 BY USING EREQUEST ON WWW.GEORGIA811.COM OR BY CALLING 811 OR 1-800-282-7411 AT LEAST 48 HOURS BUT NO MORE THAN 10 WORKING DAYS IN ADVANCE TO HAVE UTILITY LINES MARKED.

GRAPHIC SCALE & ORIENTATION

15 7.5 0 15 30 60 90

SCALE: 1"=30'-0"

BREEDLOVE LAND PLANNING
Landscape Architects • Civil Engineers
www.landplanning.net

Menefee Architecture | Architecture Planning Design
1075 Brady Ave NW Atlanta GA 30318 | t 404.876.1011

GEORGIA REGISTERED No. PE038701 PROFESSIONAL ENGINEER KYLE WATSON WEBB

COPYRIGHT

This drawing and all reproductions copyrighted and the property of Menefee Architecture LLC and may not be used in any without their permission.

COPYRIGHT 2018

ROME TENNIS INDOOR FACILITY

Rome, Georgia

DRAWN BY	CHECKED BY
BAM	KWW

DATE
2019-02-15

REVISIONS	
NUMBER	DATE

TITLE
INITIAL ES&PC PLAN

PROJECT NUMBER
201811

SHEET NUMBER
C410

75% CONSTRUCTION DOCUMENTS 2/15/2019

EROSION NARRATIVE (36)

EROSION CONTROL MEASURES SHALL BE PROVIDED TO PROTECT THE SITE FROM SOIL LOSS AND TO PROTECT DOWNSTREAM CHANNELS, PONDS, AND PROPERTIES FROM SOIL MIGRATION INTO AND EROSION OF DOWNSTREAM CHANNELS.

INITIAL PHASE OF EROSION SHALL CONSIST OF INLET PROTECTION AROUND EXISTING STORM STRUCTURES AND PERIMETER SILT FENCE OR COMPOST FILTER SOCKS.

INTERMEDIATE PHASE OF EROSION CONTROL SHALL CONSIST OF TEMPORARY SEDIMENT TRAPS AT STORM INLETS AND TEMPORARY STABILIZATION OF THE SITE AS SOON AS POSSIBLE TO PREVENT EROSION. NO MASS GRADING WILL BE REQUIRED FOR CONSTRUCTION OF THE PROPOSED BUILDING, BUT CONTRACTOR SHALL SEQUENCE WORK WHICH CREATES DISTURBANCE IN A MANNER WHICH MINIMIZES TIME OF EXPOSURE PRIOR TO FOUNDATION CONSTRUCTION. EXISTING POND WILL BE UTILIZED TO PROVIDE SEDIMENT STORAGE AS REQUIRED FOR THIS PROJECT AND BE CLEANED OF ALL SEDIMENT AND DEBRIS AT THE END OF CONSTRUCTION. CONTRACTOR SHALL ANTICIPATED DAILY INSPECTION OF BMPS AND WEEKLY MAINTENANCE AS REQUIRED.

FINAL PHASE OF EROSION CONTROL SHALL CONSIST OF A FULL STABILIZATION OF THE SITE WITH SOD (DA4) AS SHOWN DIRECTLY AROUND THE BUILDING. ALL OTHER AREAS TO BE STABILIZED WITH BERMUDA GRASS HYDROSEEDING (Db3)

GENERAL EROSION NOTES

1. NOTIFY CITY/COUNTY INSPECTORS 24 HOURS BEFORE BEGINNING OF EVERY CONSTRUCTION PHASE.

2. ALL BUFFERS AND TREE SAVE AREAS SHALL BE CLEARLY IDENTIFIED BY FLAGGING AND/OR FENCING PRIOR TO COMMENCEMENT OF ANY LAND DISTURBANCE.

3. THE INSTALLATION OF EROSION AND SEDIMENTATION CONTROL MEASURES AND PRACTICES SHALL OCCUR PRIOR TO OR CONCURRENT WITH LAND DISTURBING ACTIVITIES AND CONSTRUCTION ON THE SITE AND MAINTAINED UNTIL PERMANENT GROUNDCOVER IS ESTABLISHED.

4. ALL SEDIMENT BARRIERS SHALL BE INSTALLED PRIOR TO ANY GRADING.

5. SEDIMENT BARRIER DEVICES SHALL BE INSPECTED AND REPAIRED OF DAMAGE DAILY. ANY ACCUMULATED SEDIMENT SHALL BE REMOVED AND SPREAD ON SITE.

6. ALL DISTURBED AREAS SHALL BE GRASSED AS SOON AS CONSTRUCTION PHASE PERMITS.

7. EROSION AND SEDIMENTATION CONTROL MEASURES SHALL BE MAINTAINED AT ALL TIMES. ADDITIONAL EROSION AND SEDIMENTATION CONTROL MEASURES SHALL BE INSTALLED IF DEEMED NECESSARY BY ON-SITE INSPECTION OR AS REQUIRED BY COUNTY.

8. MAINTENANCE OF ALL SOIL EROSION AND SEDIMENTATION CONTROL MEASURES AND PRACTICES WHETHER TEMPORARY OR PERMANENT, SHALL BE THE RESPONSIBILITY OF THE CONTRACTOR.

9. ANY DISCREPANCY BETWEEN THIS SHEET AND OTHERS IN THIS SET SHALL BE REFERRED TO THE ARCHITECT BY THE CONTRACTOR FOR CLARIFICATION BEFORE PROCEEDING WITH THE WORK.

10. SEDIMENT STORAGE LEVEL MARKERS MUST BE INSTALLED IN SEDIMENT STORAGE STRUCTURES, INDICATING THE 1/3 FULL VOLUME.

11. MAXIMUM CUT OR FILL SLOPE IS (2):1 2' HORIZONTAL TO 1' VERTICAL.

12. CONTRACTOR SHALL PROVIDE TEMPORARY DOWN DRAINS ON FILL SLOPES TO PREVENT EROSION PRIOR TO STABILIZATION.

13. CONTRACTOR SHALL REMOVE ACCUMULATED SEDIMENT FROM DETENTION BASIN AT END OF CONSTRUCTION WHEN ALL DISTURBED AREAS HAVE BEEN FULLY STABILIZED.

GSWCC LEVEL 2 CERTIFICATIONS

I CERTIFY UNDER PENALTY OF LAW THAT THIS PLAN WAS PREPARED AFTER A SITE VISIT TO THE LOCATIONS DESCRIBED HEREIN BY MYSELF OR MY AUTHORIZED AGENT, UNDER MY SUPERVISION.

I CERTIFY THAT THE PERMITTEE'S EROSION, SEDIMENTATION AND POLLUTION CONTROL PLAN PROVIDES FOR AN APPROPRIATE AND COMPREHENSIVE SYSTEM OF BEST MANAGEMENT PRACTICES REQUIRED BY THE GEORGIA WATER QUALITY CONTROL ACT AND THE DOCUMENT "MANUAL FOR EROSION AND SEDIMENT CONTROL IN GEORGIA" (MANUAL) PUBLISHED BY THE STATE SOIL AND WATER CONSERVATION COMMISSION AS OF JANUARY 1 OF THE YEAR IN WHICH THE LAND-DISTURBING ACTIVITY WAS PERMITTED, PROVIDES FOR THE SAMPLING OF THE RECEIVING WATER(S) OR THE SAMPLING OF THE STORM WATER OUTFALLS AND THAT THE DESIGNED SYSTEM OF BEST MANAGEMENT PRACTICES AND SAMPLING METHODS IS EXPECTED TO MEET THE REQUIREMENTS CONTAINED IN THE GENERAL NPDES PERMIT NO. GAR 000001.

SIGNED: DATE: 01-08-2019

CERTIFIED DESIGN PROFESSIONAL: KYLE LEBB
GSWCC CERTIFICATION NO. LEVEL II # 0000012911
EXPIRATION DATE: 12-13-2020
COMPANY: BREEDLOVE LAND PLANNING, INC.

(2) (12) (13)

GSWCC REQUIRED NOTES

THE DESIGN PROFESSIONAL WHO PREPARED THE ES&PC PLAN IS TO INSPECT THE INSTALLATION OF THE INITIAL SEDIMENT STORAGE REQUIREMENTS AND PERIMETER CONTROL BMPS WITHIN 7 DAYS AFTER INSTALLATION.

NON-EXEMPT ACTIVITIES SHALL NOT BE CONDUCTED WITHIN THE 25 OR 50-FOOT UNDISTURBED STREAM BUFFERS AS MEASURED FROM THE POINT OF WRESTED VEGETATION OR WITHIN 25 FEET OF THE COASTAL MARSHLAND BUFFER AS MEASURED FROM THE JURISDICTIONAL DETERMINATION LINE WITHOUT FIRST ACQUIRING THE NECESSARY VARIANCES AND PERMITS.

AMENDMENTS / REVISIONS TO THE ES&PC PLAN WHICH HAVE A SIGNIFICANT EFFECT ON BMPS WITH A HYDRAULIC COMPONENT MUST BE CERTIFIED BY THE DESIGN PROFESSIONAL.

WASTE MATERIALS SHALL NOT BE DISCHARGED TO WATERS OF THE STATE, EXCEPT AS AUTHORIZED BY A SECTION 404 PERMIT.

THE ESCAPE OF SEDIMENT FROM THE SITE SHALL BE PREVENTED BY THE INSTALLATION OF EROSION AND SEDIMENT CONTROL MEASURES AND PRACTICES PRIOR TO LAND DISTURBING ACTIVITIES.

EROSION CONTROL MEASURES WILL BE MAINTAINED AT ALL TIMES. IF FULL IMPLEMENTATION OF THE APPROVED PLAN DOES NOT PROVIDE FOR EFFECTIVE EROSION CONTROL, ADDITIONAL EROSION AND SEDIMENT CONTROL MEASURES SHALL BE IMPLEMENTED TO CONTROL OR TREAT THE SEDIMENT SOURCE.

ANY DISTURBED AREA LEFT EXPOSED FOR A PERIOD GREATER THAN 14 DAYS SHALL BE STABILIZED WITH MULCH OR TEMPORARY SEEDING.

(14) (15) (17) (18) (19) (20) (21)

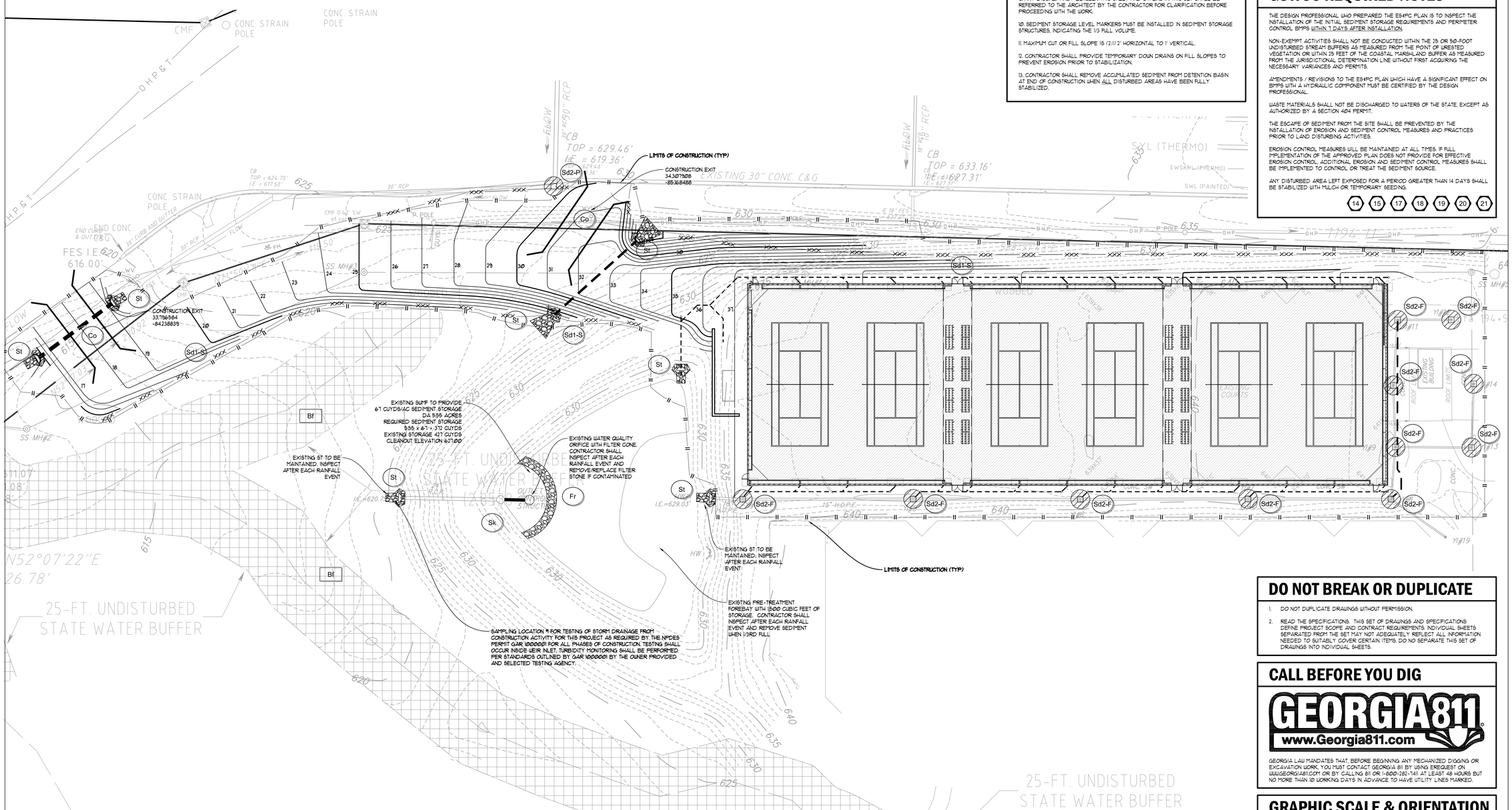

DO NOT BREAK OR DUPLICATE

1. DO NOT DUPLICATE DRAWINGS WITHOUT PERMISSION.
2. READ THE SPECIFICATIONS. THIS SET OF DRAWINGS AND SPECIFICATIONS DEFINE PROJECT SCOPE AND CONTRACT REQUIREMENTS. INDIVIDUAL SHEETS SEPARATED FROM THE SET MAY NOT ADEQUATELY REFLECT ALL INFORMATION NEEDED TO SUITABLY COVER CERTAIN ITEMS. DO NO SEPARATE THIS SET OF DRAWINGS INTO INDIVIDUAL SHEETS.

CALL BEFORE YOU DIG

GEORGIA811
www.Georgia811.com

GEORGIA LAW MANDATES THAT, BEFORE BEGINNING ANY MECHANIZED DIGGING OR EXCAVATION WORK, YOU MUST CONTACT GEORGIA 811 BY USING EREQUEST ON WWW.GEORGIA811.COM OR BY CALLING 811 OR 1-800-282-7411 AT LEAST 48 HOURS BUT NO MORE THAN 10 WORKING DAYS IN ADVANCE TO HAVE UTILITY LINES MARKED.

GRAPHIC SCALE & ORIENTATION

15 7.5 0 15 30 60 90

SCALE: 1"=30'-0"

BREEDLOVE LAND PLANNING
Landscape Architects • Civil Engineers
www.landplanning.net

Menefee Architecture | Architecture Planning Design
1075 Brady Ave NW Atlanta GA 30318 | t 404.876.1011

GEORGIA REGISTERED No. PE038701 PROFESSIONAL ENGINEER KYLE WATSON WEBB

COPYRIGHT

This drawing and all reproductions copyrighted and the property of Menefee Architecture LLC and may not be used in any without their permission.

COPYRIGHT 2018

ROME TENNIS INDOOR FACILITY

Rome, Georgia

DRAWN BY	CHECKED BY
BAM	KWW

DATE
2019-02-15

REVISIONS	
NUMBER	DATE

TITLE
INTERMEDIATE ES&PC PLAN

PROJECT NUMBER
201811

SHEET NUMBER
C420

75% CONSTRUCTION DOCUMENTS 2/15/2019

TREE LEGEND

EVERGREEN UNDERSTORY TREE:
(3) ILEX X 'NELLIE R. STEVENS'
NELLIE R. STEVENS HOLLY, 4" CAL.

LARGE CONIFER TREE:
(6) TAXODIUM DISTICHUM 'AUTUMN GOLD'
AUTUMN GOLD BALD CYPRESS 6" CAL.

FINAL ES&PC BMPs & N.O.T. NOTES

REFER TO FINAL EROSION CONTROL PLAN (SHEET C-440) FOR LIMITS OF SODDING, HYDRO-SEEDING, AND OTHER STABILIZATION REQUIRED BY THIS CONTRACT. ALL AREAS DISTURBED BY CONSTRUCTION ACTIVITY, INCLUDING THOSE NOT EXPLICITLY SHOWN IN THE CONSTRUCTION DRAWINGS, SHALL BE STABILIZED WITH BERMUDA GRASS VIA HYDRO-SEEDING UNLESS OTHERWISE NOTED. CONTRACTOR SHALL ACHIEVE 91% COVERAGE OF ALL LAWN AREAS WITH BARE SPOTS NO LARGER THAN ONE (1) SQUARE FOOT. CONTRACTOR SHALL BE REQUIRED TO ACHIEVE THE MINIMUM COVERAGES FOR "FINAL STABILIZATION" REQUIRED BY THE GEORGIA NPDES. PERMIT PRIOR TO FILING OF THE N.P.D.E.S. NOTICE OF TERMINATION (NOT).

WHEN THE FACILITY/CONSTRUCTION SITE HAS UNDERGONE FINAL STABILIZATION AND ALL STORM WATER DISCHARGES FROM CONSTRUCTION ACTIVITIES THAT ARE AUTHORIZED BY THE N.P.D.E.S. GENERAL PERMITS HAVE CEASED OR WHEN THE OWNER AND/OR OPERATOR OF THE SITE CHANGES, THE PERMITTEE OF THE FACILITY/CONSTRUCTION SITE SHALL SUBMIT A NOTICE OF TERMINATION.

FINAL STABILIZATION MEANS THAT ALL SOIL DISTURBING ACTIVITIES AT THE SITE HAVE BEEN COMPLETED, AND THAT FOR UNPAVED AREAS AND AREAS NOT COVERED BY PERMANENT STRUCTURES AND AREAS LOCATED OUTSIDE THE WASTE DISPOSAL LIMITS OF A LANDFILL CELL THAT HAS BEEN CERTIFIED BY E.P.D. FOR WASTE DISPOSAL, 100% OF THE SOIL SURFACE IS UNIFORMLY COVERED IN PERMANENT VEGETATION WITH A DENSITY OF 70% OR GREATER, OR EQUIVALENT PERMANENT STABILIZATION MEASURES (SUCH AS THE USE OF RIPP RAP, GABIONS, PERMANENT MULCHES OR GEO-TEXTILES) HAVE BEEN USED. PERMANENT VEGETATION SHALL CONSIST OF: PLANTED TREES, SHRUBS, PERENNIAL VINES, A CROP OF PERENNIAL VEGETATION APPROPRIATE FOR THE TIME OF YEAR AND REGION, OR A CROP OF ANNUAL VEGETATION AND A SEEDING OF TARGET CROP PERENNIALS APPROPRIATE FOR THE REGION. FINAL STABILIZATION APPLIES TO EACH PHASE OF CONSTRUCTION.

EROSION NARRATIVE (36)

EROSION CONTROL MEASURES SHALL BE PROVIDED TO PROTECT THE SITE FROM SOIL LOSS AND TO PROTECT DOWNSTREAM CHANNELS, PONDS, AND PROPERTIES FROM SOIL MIGRATION INTO AND EROSION OF DOWNSTREAM CHANNELS.

INITIAL PHASE OF EROSION SHALL CONSIST OF INLET PROTECTION AROUND EXISTING STORM STRUCTURES AND PERIMETER SILT FENCE OR COMPOST FILTER SOCKS.

INTERMEDIATE PHASE OF EROSION CONTROL SHALL CONSIST OF TEMPORARY SEDIMENT TRAPS AT STORM INLETS AND TEMPORARY STABILIZATION OF THE SITE AS SOON AS POSSIBLE TO PREVENT EROSION. NO MASS GRADING WILL BE REQUIRED FOR CONSTRUCTION OF THE PROPOSED BUILDING, BUT CONTRACTOR SHALL SEQUENCE WORK WHICH CREATES DISTURBANCE IN A MANNER WHICH MINIMIZES TIME OF EXPOSURE PRIOR TO FOUNDATION CONSTRUCTION. EXISTING POND WILL BE UTILIZED TO PROVIDE SEDIMENT STORAGE AS REQUIRED FOR THIS PROJECT AND BE CLEANED OF ALL SEDIMENT AND DEBRIS AT THE END OF CONSTRUCTION. CONTRACTOR SHALL ANTICIPATED DAILY INSPECTION OF BMPS AND WEEKLY MAINTENANCE AS REQUIRED.

FINAL PHASE OF EROSION CONTROL SHALL CONSIST OF A FULL STABILIZATION OF THE SITE WITH SOD (Ds4) AS SHOWN DIRECTLY AROUND THE BUILDING. ALL OTHER AREAS TO BE STABILIZED WITH BERMUDA GRASS HYDROSEEDING (Ds3)

TREE REPLACEMENT

UNITS REMOVED: 22 NELLIE R STEVENS @ 0.3 UNITS/TREE = 6.6 UNITS

UNITS PLANTED: 6 BALD CYPRESS @ 1.3 UNITS/TREE = 7.8 UNITS (GREATER THAN REMOVED)

GENERAL EROSION NOTES

1. NOTIFY CITY/COUNTY INSPECTORS 24 HOURS BEFORE BEGINNING OF EVERY CONSTRUCTION PHASE.

2. ALL BUFFERS AND TREE SAVE AREAS SHALL BE CLEARLY IDENTIFIED BY FLAGGING AND/OR FENCING PRIOR TO COMMENCEMENT OF ANY LAND DISTURBANCE.

3. THE INSTALLATION OF EROSION AND SEDIMENTATION CONTROL MEASURES AND PRACTICES SHALL OCCUR PRIOR TO OR CONCURRENT WITH LAND DISTURBING ACTIVITIES AND CONSTRUCTION ON THE SITE AND MAINTAINED UNTIL PERMANENT GROUNDCOVER IS ESTABLISHED.

4. ALL SEDIMENT BARRIERS SHALL BE INSTALLED PRIOR TO ANY GRADING.

5. SEDIMENT BARRIER DEVICES SHALL BE INSPECTED AND REPAIRED OF DAMAGE DAILY. ANY ACCUMULATED SEDIMENT SHALL BE REMOVED AND SPREAD ON SITE.

6. ALL DISTURBED AREAS SHALL BE GRASSED AS SOON AS CONSTRUCTION PHASE PERMITS.

7. EROSION AND SEDIMENTATION CONTROL MEASURES SHALL BE MAINTAINED AT ALL TIMES. ADDITIONAL EROSION AND SEDIMENTATION CONTROL MEASURES SHALL BE INSTALLED IF DEEMED NECESSARY BY ON-SITE INSPECTION OR AS REQUIRED BY COUNTY.

8. MAINTENANCE OF ALL SOIL EROSION AND SEDIMENTATION CONTROL MEASURES AND PRACTICES WHETHER TEMPORARY OR PERMANENT, SHALL BE THE RESPONSIBILITY OF THE CONTRACTOR.

9. ANY DISCREPANCY BETWEEN THIS SHEET AND OTHERS IN THIS SET SHALL BE REFERRED TO THE ARCHITECT BY THE CONTRACTOR FOR CLARIFICATION BEFORE PROCEEDING WITH THE WORK.

10. SEDIMENT STORAGE LEVEL MARKERS MUST BE INSTALLED IN SEDIMENT STORAGE STRUCTURES, INDICATING THE 1/3 FULL VOLUME.

11. MAXIMUM CUT OR FILL SLOPE IS (2):1 2' HORIZONTAL TO 1' VERTICAL.

12. CONTRACTOR SHALL PROVIDE TEMPORARY DOWN DRAINS ON FILL SLOPES TO PREVENT EROSION PRIOR TO STABILIZATION.

13. CONTRACTOR SHALL REMOVE ACCUMULATED SEDIMENT FROM DETENTION BASIN AT END OF CONSTRUCTION WHEN ALL DISTURBED AREAS HAVE BEEN FULLY STABILIZED.

GSWCC LEVEL 2 CERTIFICATIONS

I CERTIFY UNDER PENALTY OF LAW THAT THIS PLAN WAS PREPARED AFTER A SITE VISIT TO THE LOCATIONS DESCRIBED HEREIN BY MYSELF OR MY AUTHORIZED AGENT, UNDER MY SUPERVISION.

I CERTIFY THAT THE PERMITTEE'S EROSION, SEDIMENTATION AND POLLUTION CONTROL PLAN PROVIDES FOR AN APPROPRIATE AND COMPREHENSIVE SYSTEM OF BEST MANAGEMENT PRACTICES REQUIRED BY THE GEORGIA WATER QUALITY CONTROL ACT AND THE DOCUMENT "MANUAL FOR EROSION AND SEDIMENT CONTROL IN GEORGIA" (MANUAL) PUBLISHED BY THE STATE SOIL AND WATER CONSERVATION COMMISSION AS OF JANUARY 1 OF THE YEAR IN WHICH THE LAND-DISTURBING ACTIVITY WAS PERMITTED, PROVIDES FOR THE SAMPLING OF THE RECEIVING WATER(S) OR THE SAMPLING OF THE STORM WATER OUTFALLS AND THAT THE DESIGNED SYSTEM OF BEST MANAGEMENT PRACTICES AND SAMPLING METHODS IS EXPECTED TO MEET THE REQUIREMENTS CONTAINED IN THE GENERAL NPDES PERMIT NO. GAR 100001.

SIGNED: DATE: 01-08-2019

CERTIFIED DESIGN PROFESSIONAL: KYLE WEBB
GSWCC CERTIFICATION NO. LEVEL II # 0000012911
EXPIRATION DATE: 12-13-2020
COMPANY: BREEDLOVE LAND PLANNING, INC.

(2) (12) (13)

GSWCC REQUIRED NOTES

THE DESIGN PROFESSIONAL WHO PREPARED THE ES&PC PLAN IS TO INSPECT THE INSTALLATION OF THE INITIAL SEDIMENT STORAGE REQUIREMENTS AND PERIMETER CONTROL BMPS WITHIN 7 DAYS AFTER INSTALLATION.

NON-EXEMPT ACTIVITIES SHALL NOT BE CONDUCTED WITHIN THE 25 OR 50-FOOT UNDISTURBED STREAM BUFFERS AS MEASURED FROM THE POINT OF IRRESTED VEGETATION OR WITHIN 25 FEET OF THE COASTAL MARSHLAND BUFFER AS MEASURED FROM THE JURISDICTIONAL DETERMINATION LINE WITHOUT FIRST ACQUIRING THE NECESSARY VARIANCES AND PERMITS.

AMENDMENTS / REVISIONS TO THE ES&PC PLAN WHICH HAVE A SIGNIFICANT EFFECT ON BMPS WITH A HYDRAULIC COMPONENT MUST BE CERTIFIED BY THE DESIGN PROFESSIONAL.

WASTE MATERIALS SHALL NOT BE DISCHARGED TO WATERS OF THE STATE, EXCEPT AS AUTHORIZED BY A SECTION 404 PERMIT.

THE ESCAPE OF SEDIMENT FROM THE SITE SHALL BE PREVENTED BY THE INSTALLATION OF EROSION AND SEDIMENT CONTROL MEASURES AND PRACTICES PRIOR TO LAND DISTURBING ACTIVITIES.

EROSION CONTROL MEASURES WILL BE MAINTAINED AT ALL TIMES. IF FULL IMPLEMENTATION OF THE APPROVED PLAN DOES NOT PROVIDE FOR EFFECTIVE EROSION CONTROL, ADDITIONAL EROSION AND SEDIMENT CONTROL MEASURES SHALL BE IMPLEMENTED TO CONTROL OR TREAT THE SEDIMENT SOURCE.

ANY DISTURBED AREA LEFT EXPOSED FOR A PERIOD GREATER THAN 14 DAYS SHALL BE STABILIZED WITH MULCH OR TEMPORARY SEEDING.

(14) (15) (17) (18) (19) (20) (21)

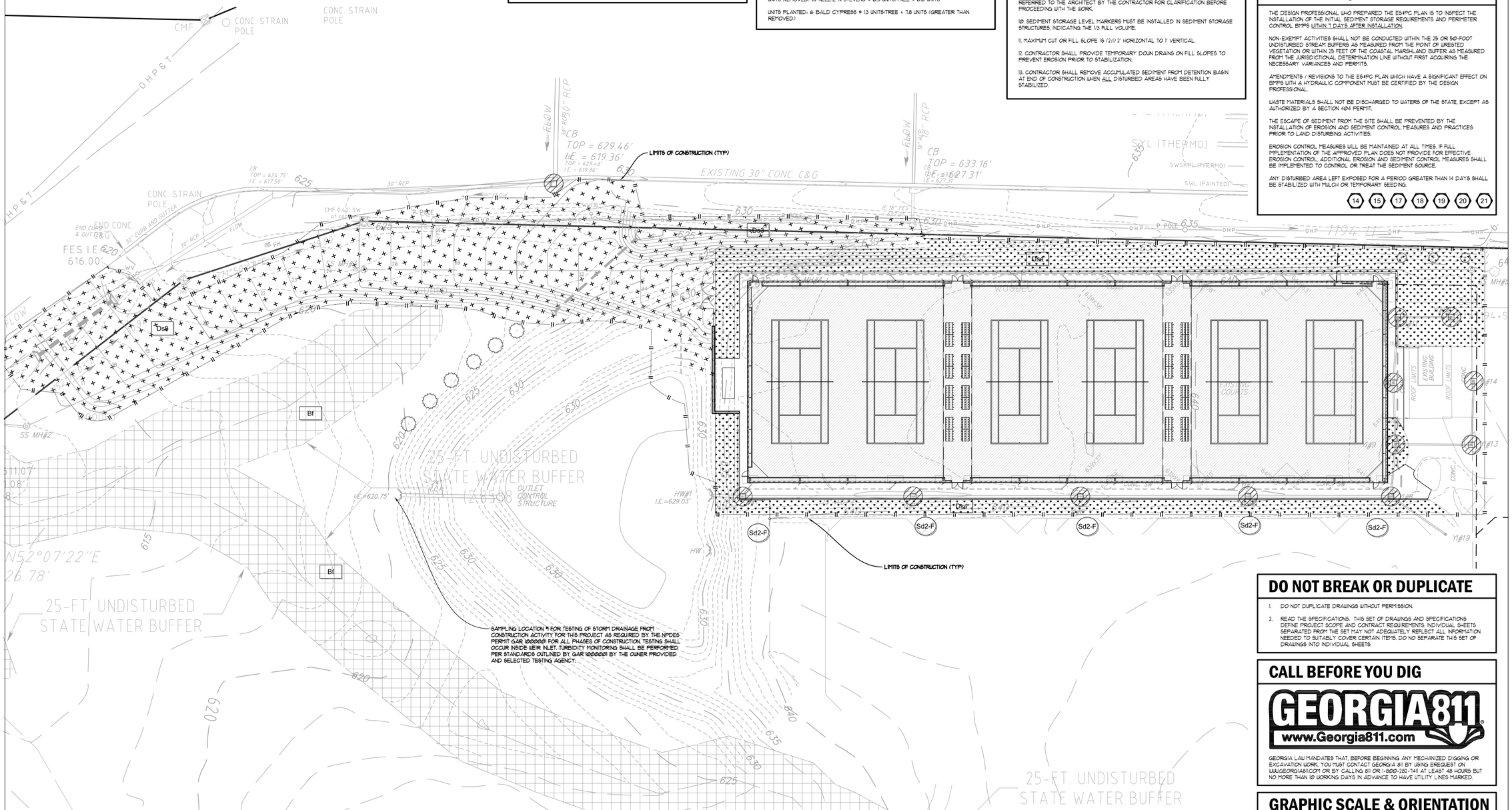

DO NOT BREAK OR DUPLICATE

1. DO NOT DUPLICATE DRAWINGS WITHOUT PERMISSION.
2. READ THE SPECIFICATIONS. THIS SET OF DRAWINGS AND SPECIFICATIONS DEFINE PROJECT SCOPE AND CONTRACT REQUIREMENTS. INDIVIDUAL SHEETS SEPARATED FROM THE SET MAY NOT ADEQUATELY REFLECT ALL INFORMATION NEEDED TO SUITABLY COVER CERTAIN ITEMS. DO NO SEPARATE THIS SET OF DRAWINGS INTO INDIVIDUAL SHEETS.

CALL BEFORE YOU DIG

GEORGIA811
www.Georgia811.com

GEORGIA LAW MANDATES THAT, BEFORE BEGINNING ANY MECHANIZED DIGGING OR EXCAVATION WORK, YOU MUST CONTACT GEORGIA 811 BY USING EREQUEST ON WWW.GEORGIA811.COM OR BY CALLING 811 OR 1-800-282-7411 AT LEAST 48 HOURS BUT NO MORE THAN 10 WORKING DAYS IN ADVANCE TO HAVE UTILITY LINES MARKED.

GRAPHIC SCALE & ORIENTATION

15 7.5 0 15 30 60 90
SCALE: 1"=30'-0"

BREEDLOVE LAND PLANNING
Landscape Architects • Civil Engineers
www.landplanning.net

Menefee Architecture
Architecture Planning Design
1075 Brady Ave NW Atlanta GA 30318 | t 404.876.1011

GEORGIA REGISTERED No. PE038701 PROFESSIONAL ENGINEER KYLE WATSON WEBB

COPYRIGHT

This drawing and all reproductions copyrighted and the property of Menefee Architecture LLC and may not be used in any without their permission.

COPYRIGHT 2018

ROME TENNIS INDOOR FACILITY

Rome, Georgia

DRAWN BY	CHECKED BY
BAM	KWW

DATE
2019-02-15

REVISIONS	
NUMBER	DATE

TITLE
FINAL ES&PC PLAN

PROJECT NUMBER
201811

SHEET NUMBER
C430

75% CONSTRUCTION DOCUMENTS 2/15/2019

UTILITY NARRATIVE

THE NEW INDOOR TENNIS FACILITY WILL NEED SERVED BY THE FOLLOWING UTILITIES:

DOMESTIC WATER: NO NEW DOMESTIC WATER CONNECTION WILL BE REQUIRED.

FIRE PROTECTION: PROVIDE NEW 8" DIP FIRE LINE FROM EXISTING CONNECTION ALONG ARMUCHEE CONNECTOR. NEW LINE SHALL ALONG R/W NORTH OF EXISTING PAVILION AND INTO THE NORTHEAST CORNER OF THE NEW BUILDING. REFER TO ARCHITECTURAL FOR RISER ROOM LOCATION. POST INDICATOR VALVE AND FIRE DEPARTMENT CONNECTION VAULT SHALL BE PROVIDED IN LOCATIONS AS SHOWN ON THE PLANS.

GAS SERVICE: NEW GAS CONNECTION WILL BE REQUIRED FROM OLD DALTON ROAD TO BE COORDINATED WITH UTILITY PROVIDER.

SANITARY SEWER: NO NEW SANITARY SEWER CONNECTION WILL BE REQUIRED.

POWER: COORDINATE POWER SUPPLY WITH ELECTRICAL ENGINEER. GENERAL LOCATION OF POWER SUPPLY HAS BEEN NOTED IN THESE PLANS FOR REFERENCE.

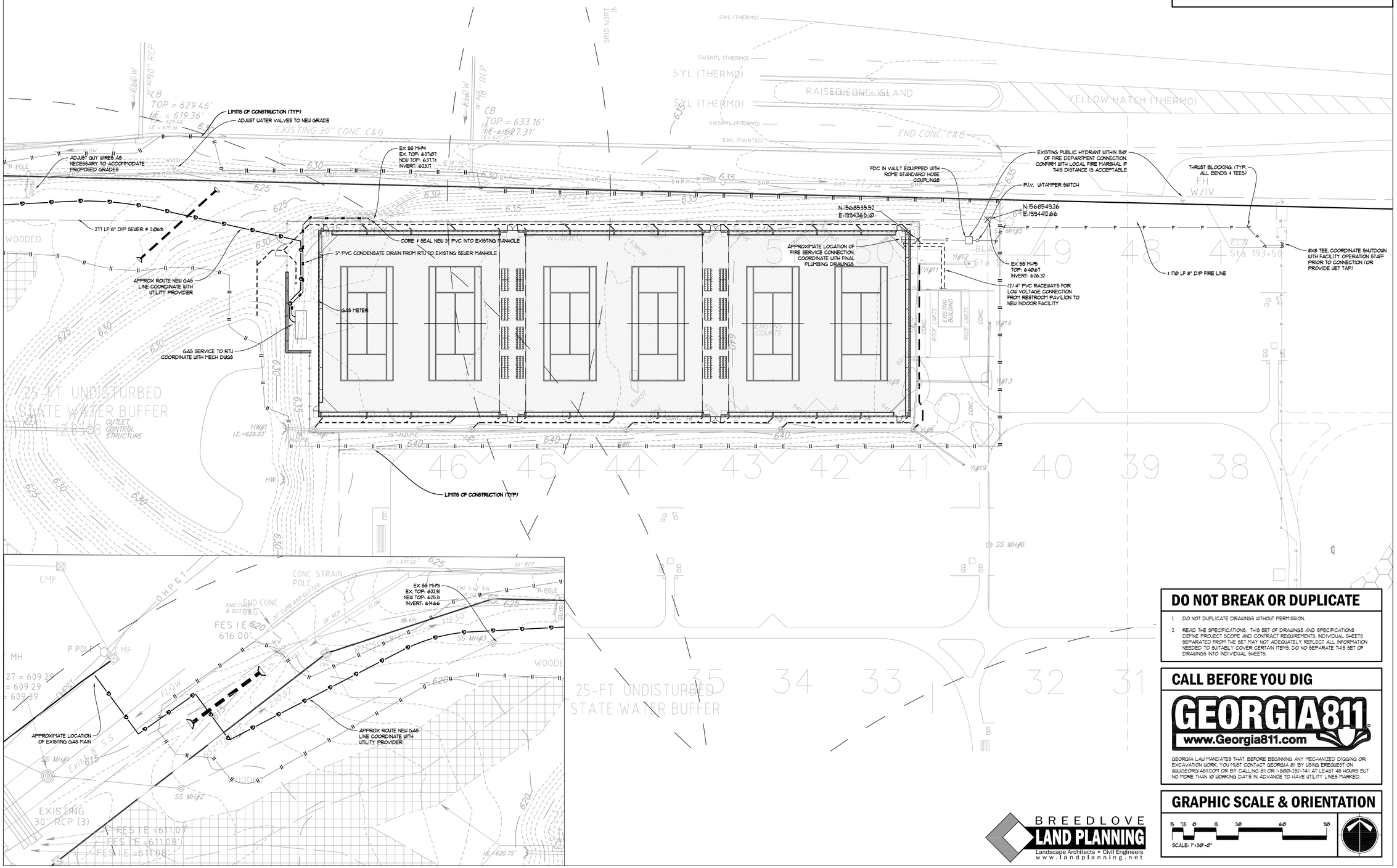

DO NOT BREAK OR DUPLICATE

1. DO NOT DUPLICATE DRAWINGS WITHOUT PERMISSION.
2. READ THE SPECIFICATIONS. THIS SET OF DRAWINGS AND SPECIFICATIONS DEFINE PROJECT SCOPE AND CONTRACT REQUIREMENTS. INDIVIDUAL SHEETS SEPARATED FROM THE SET MAY NOT ADEQUATELY REFLECT ALL INFORMATION NEEDED TO SUITABLY COVER CERTAIN ITEMS. DO NO SEPARATE THIS SET OF DRAWINGS INTO INDIVIDUAL SHEETS.

CALL BEFORE YOU DIG

GEORGIA811
www.Georgia811.com

GEORGIA LAW MANDATES THAT, BEFORE BEGINNING ANY MECHANIZED DIGGING OR EXCAVATION WORK, YOU MUST CONTACT GEORGIA 811 BY USING EREQUEST ON WWW.GEORGIA811.COM OR BY CALLING 811 OR 1-800-282-7411 AT LEAST 48 HOURS BUT NO MORE THAN 10 WORKING DAYS IN ADVANCE TO HAVE UTILITY LINES MARKED.

GRAPHIC SCALE & ORIENTATION

15 7.5 0 15 30 60 90

SCALE: 1"=30'-0"

BREEDLOVE LAND PLANNING
Landscape Architects • Civil Engineers
www.landplanning.net

Menefee Architecture | Architecture Planning Design
1075 Brady Ave NW Atlanta GA 30318 | t 404.876.1011

GEORGIA REGISTERED No. PE038701 PROFESSIONAL ENGINEER KYLE WATSON WEBB

COPYRIGHT

This drawing and all reproductions copyrighted and the property of Menefee Architecture LLC and may not be used in any without their permission.

COPYRIGHT 2018

ROME TENNIS INDOOR FACILITY

Rome, Georgia

DRAWN BY	CHECKED BY
BAM	KWW

DATE
2019-02-15

REVISIONS	
NUMBER	DATE

TITLE
SITE UTILITY PLAN

PROJECT NUMBER
201811

SHEET NUMBER
C500

75% CONSTRUCTION DOCUMENTS 2/15/2019

Calculate Skimmer Size					
Basin Volume in Cubic Feet	19,374	Cu.Ft	Skimmer Size	4.0	Inch
Days to Drain*	1	Days	Orifice Radius	2.0	Inch[es]
			Orifice Diameter	3.9	Inch[es]
*In NC assume 3 days to drain					

1 — TEMPORARY CONSTRUCTION EXIT (Co)

MAINTENANCE:
EXIT SHALL BE MAINTAINED IN A CONDITION THAT WILL PREVENT TRACKING OR FLOW OF MUD ONTO PUBLIC RIGHTS-OF-WAY. THIS MAY REQUIRE PERIODIC TOP DRESSING WITH 1.5-3.5" STONE, AS CONDITIONS DEMAND, AND REPAIR AND/OR CLEANOUT OF ANY STRUCTURES TO TRAP SEDIMENT. ALL MATERIALS SPILLED, DROPPED, WASHED, OR TRACKED FROM VEHICLES OR SITE ONTO ROADWAYS OR INTO STORM DRAINS MUST BE REMOVED IMMEDIATELY.

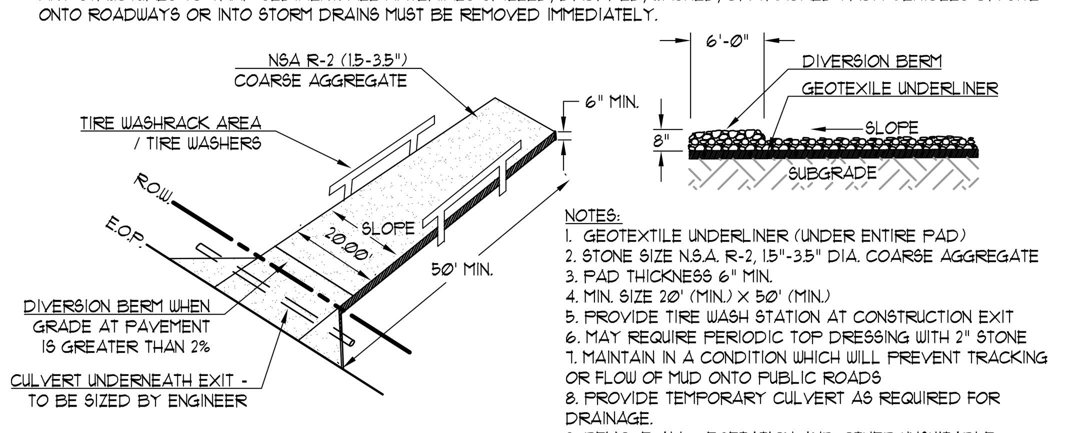

NOTES:
1. GEOTEXTILE UNDERLINER (UNDER ENTIRE PAD)
2. STONE SIZE N.S.A. R-2, 1.5"-3.5" DIA. COARSE AGGREGATE
3. PAD THICKNESS 6" MIN.
4. MIN. SIZE 20' (MIN.) X 50' (MIN.)
5. PROVIDE TIRE WASH STATION AT CONSTRUCTION EXIT
6. MAY REQUIRE PERIODIC TOP DRESSING WITH 2" STONE
7. MAINTAIN IN A CONDITION WHICH WILL PREVENT TRACKING OR FLOW OF MUD ONTO PUBLIC ROADS
8. PROVIDE TEMPORARY CULVERT AS REQUIRED FOR DRAINAGE.
9. REMOVE ALL VEGETATION AND OTHER UNSUITABLE MATERIAL FROM THE FOUNDATION AREA.

TEMPORARY CONSTRUCTION EXIT

NOT TO SCALE

2 — TEMPORARY SENSITIVE SEDIMENT BARRIER - SILT FENCE (Sd1-S)

MAINTENANCE:
SEDIMENT SHALL BE REMOVED WHEN IT HAS ACCUMULATED TO ½ THE ORIGINAL HEIGHT OF THE BARRIER. SEDIMENT BARRIERS SHALL BE REPLACED WHENEVER THEY HAVE DETERIORATED TO SUCH AN EXTENT THAT THE EFFECTIVENESS OF THE PRODUCT IS REDUCED (APPROXIMATELY SIX MONTHS) OR THE HEIGHT OF THE PRODUCT IS NOT MAINTAINING 80% OF ITS PROPERLY INSTALLED HEIGHT.
TEMPORARY SEDIMENT BARRIERS SHALL REMAIN IN PLACE UNTIL DISTURBED AREAS HAVE BEEN PERMANENTLY STABILIZED. ALL SEDIMENT ACCUMULATED AT THE BARRIER SHALL BE REMOVED AND PROPERLY DISPOSED OF BEFORE THE BARRIER IS REMOVED.

NOTES:
1. TEMPORARY PLANTINGS MUST BE REPLACED BY PERMANENT GRASS DURING THE FIRST AVAILABLE PLANTING SEASON.
2. SILT CONTROL SHALL BE IN EFFECT PRIOR TO ANY GRADING OF CONSTRUCTION.
3. SILT FABRIC SHALL BE 36" MINIMUM WIDTH.
4. SPLICED JOINTS SHALL OVERLAP 18", WITH MATCHING POST.
5. DRIVE 5' (60") MIN. POSTS 24" INTO SOIL.
6. DIG DITCH 12" WIDE AND 6" DEEP. LAY IN FABRIC TO BOTTOM OF TRENCH, THEN BACKFILL COVERING FABRIC.
7. USE D.O.T. APPROVED WOOD OR STEEL POST 4'-0" O.C.
8. J-HOOKS TO BE PROVIDED AT EVERY 4 FOOT VERTICAL GRADE CHANGE ALONG SILT FENCE LINES.

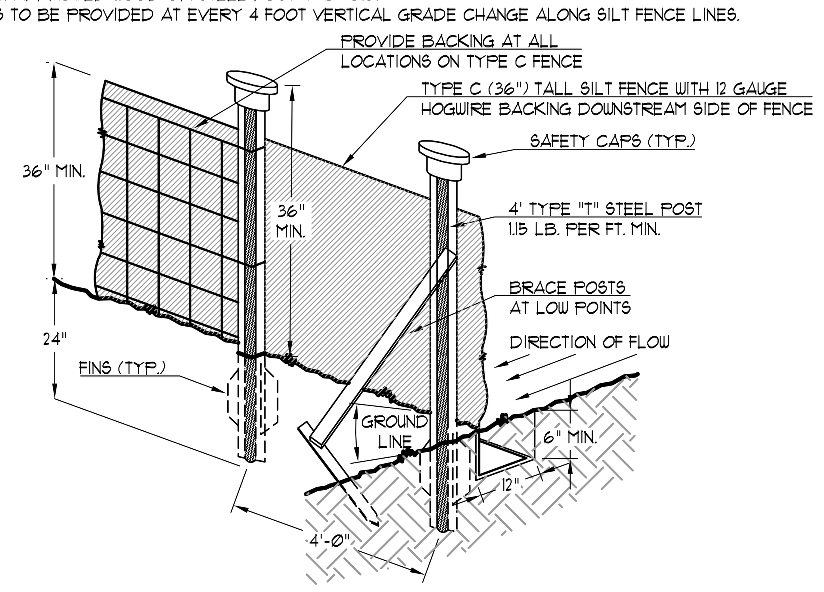

GDOT WIREBACK - TYPE 'C'

TEMPORARY SENSITIVE SEDIMENT BARRIER - SILT FENCE

NOT TO SCALE

3 — TEMPORARY AND PERMANENT SLOPE STABILIZATION MATTING (PERM) - BLANKET (TEMP) (Ss)

MAINTENANCE:
INSPECT BLANKETS AND MATTING PERIODICALLY FOLLOWING INSTALLATION, ESPECIALLY AFTER RAIN EVENTS. ANY DISLOCATION OR FAILURE SHALL BE REPAIRED IMMEDIATELY. IF WASHOUT OR BREAKAGE OCCURS, MATERIAL SHALL BE UNINSTALLED, SLOPE REPAIRED, THEN MATERIAL REINSTALLED. BMP SHALL BE MONITORED UNTIL AREA HAS BEEN FINALLY STABILIZED.

ALL DIMENSIONS SHOWN ARE TYPICAL

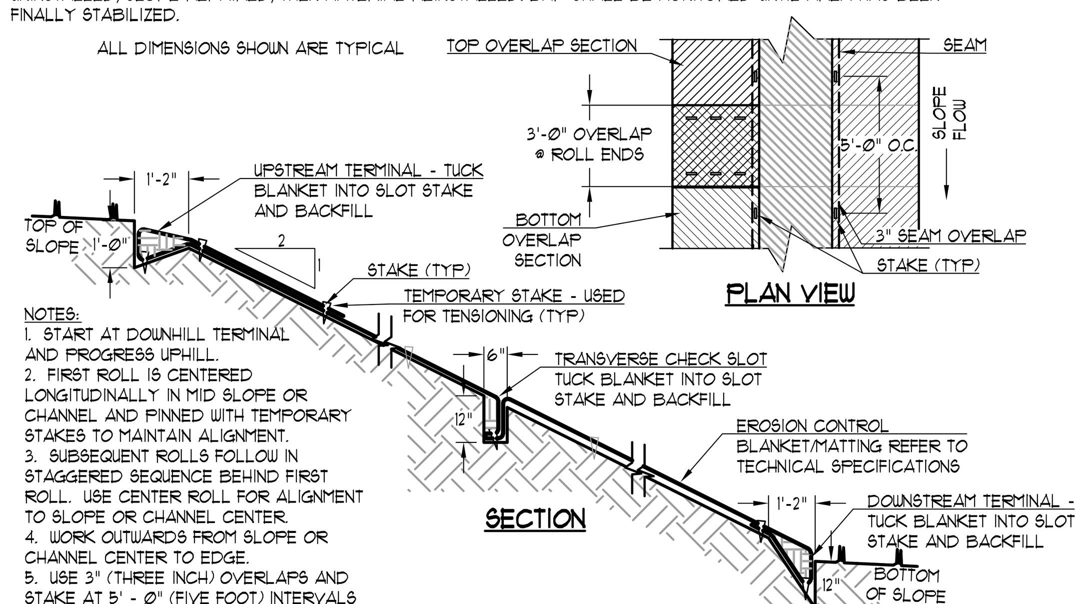

NOTES:
1. START AT DOWNHILL TERMINAL AND PROGRESS UPHILL.
2. FIRST ROLL IS CENTERED LONGITUDINALLY IN MID SLOPE OR CHANNEL AND PINNED WITH TEMPORARY STAKES TO MAINTAIN ALIGNMENT.
3. SUBSEQUENT ROLLS FOLLOW IN STAGGERED SEQUENCE BEHIND FIRST ROLL. USE CENTER ROLL FOR ALIGNMENT TO SLOPE OR CHANNEL CENTER.
4. WORK OUTWARDS FROM SLOPE OR CHANNEL CENTER TO EDGE.
5. USE 3" (THREE INCH) OVERLAPS AND STAKE AT 5' - 0" (FIVE FOOT) INTERVALS ALONG VERTICAL SEAMS.
6. USE 3' - 0" (THREE FOOT) OVERLAPS AND SHINGLE DOWNHILL TO CONNECT LINING AT ROLL ENDS.

TEMPORARY AND PERMANENT SLOPE STABILIZATION MATTING (PERM) - BLANKET (TEMP)

NOT TO SCALE

4 — TEMPORARY AND PERMANENT FILTER RING (Fr)

MAINTENANCE:
FILTER RING SHALL BE CONTINUOUSLY MONITORED. SEDIMENT SHALL BE REMOVED WITH RING IS FULL OF SEDIMENT TO ½ THE HEIGHT. FILTER RING SHALL BE REMOVED UPON FINAL STABILIZATION.

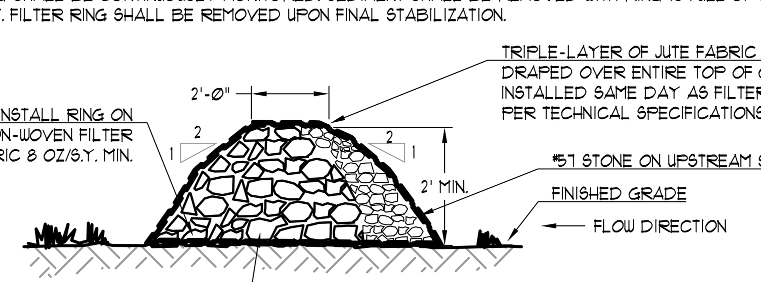

TEMPORARY AND PERMANENT FILTER RING

NOT TO SCALE

5 — TEMPORARY SKIMMER OUTLET WITH OUTLET CONTROL STRUCTURE (Sk)

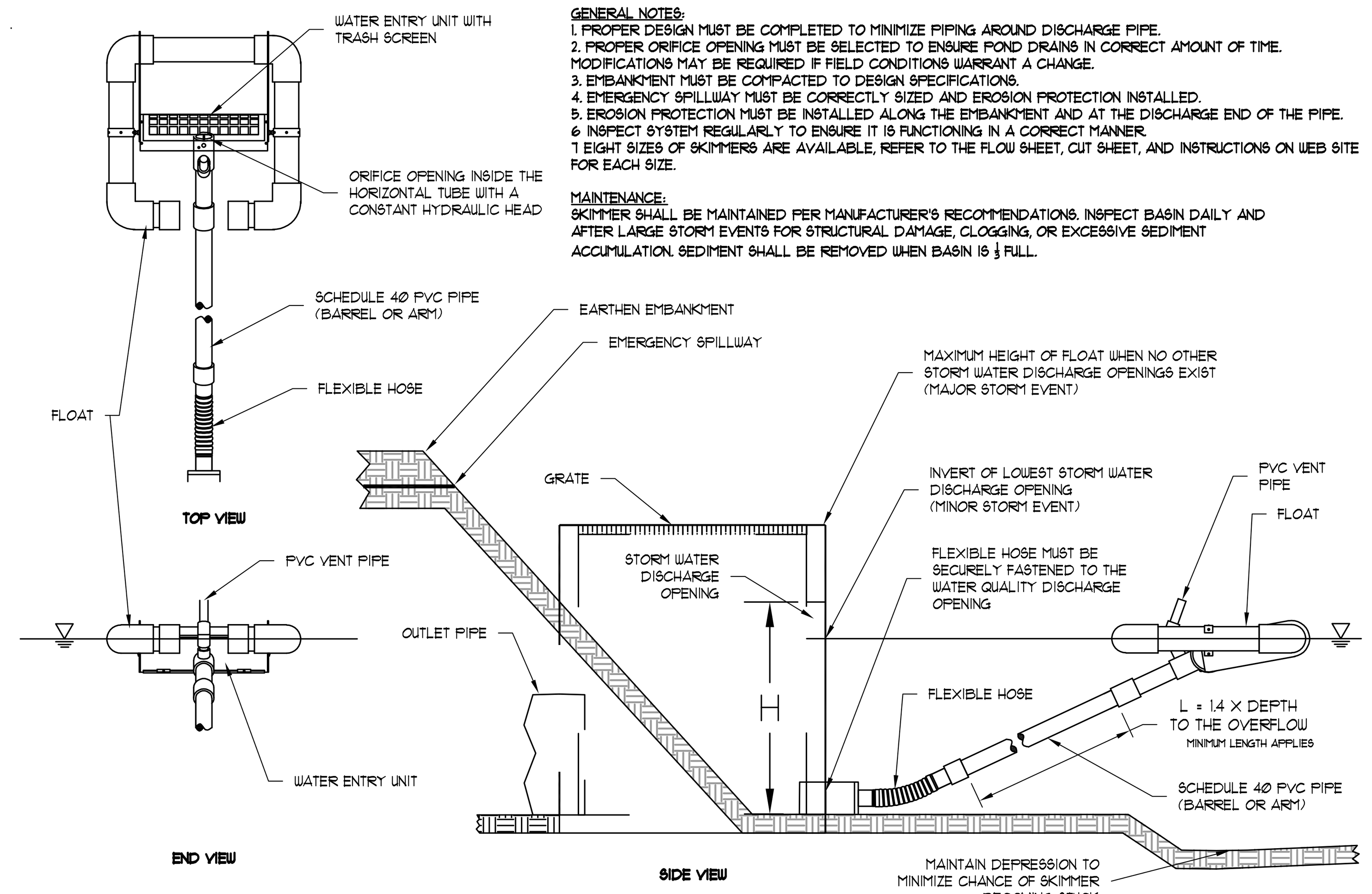

GENERAL NOTES:
1. PROPER DESIGN MUST BE COMPLETED TO MINIMIZE PIPING AROUND DISCHARGE PIPE.
2. PROPER ORIFICE OPENING MUST BE SELECTED TO ENSURE POND DRAINS IN CORRECT AMOUNT OF TIME. MODIFICATIONS MAY BE REQUIRED IF FIELD CONDITIONS WARRANT A CHANGE.
3. EMBANKMENT MUST BE COMPACTED TO DESIGN SPECIFICATIONS.
4. EMERGENCY SPILLWAY MUST BE CORRECTLY SIZED AND EROSION PROTECTION INSTALLED.
5. EROSION PROTECTION MUST BE INSTALLED ALONG THE EMBANKMENT AND AT THE DISCHARGE END OF THE PIPE.
6 INSPECT SYSTEM REGULARLY TO ENSURE IT IS FUNCTIONING IN A CORRECT MANNER.
7 EIGHT SIZES OF SKIMMERS ARE AVAILABLE, REFER TO THE FLOW SHEET, CUT SHEET, AND INSTRUCTIONS ON WEB SITE FOR EACH SIZE.

MAINTENANCE:
SKIMMER SHALL BE MAINTAINED PER MANUFACTURER'S RECOMMENDATIONS. INSPECT BASIN DAILY AND AFTER LARGE STORM EVENTS FOR STRUCTURAL DAMAGE, CLOGGING, OR EXCESSIVE SEDIMENT ACCUMULATION. SEDIMENT SHALL BE REMOVED WHEN BASIN IS ⅓ FULL.

DRAWN BY T. R. EVANS 10/10

OR APPROVED EQUAL

TEMPORARY FAIRCLOTH® SKIMMER DISCHARGE SYSTEM WITH OUTLET STRUCTURE

J. W. FAIRCLOTH & SON INC.
WWW.FAIRCLOTHSKIMMER.COM
TELEPHONE: (919) 732-1244
FAX: (919) 732-1266
EMAIL: WARREN@FAIRCLOTHSKIMMER.COM

SKIMMER OUTLET WITH OUTLET CONTROL STRUCTURE

NOT TO SCALE

6 — TEMPORARY "SILT-SAVER"™ INLET SEDIMENT TRAP (Sd2-F)

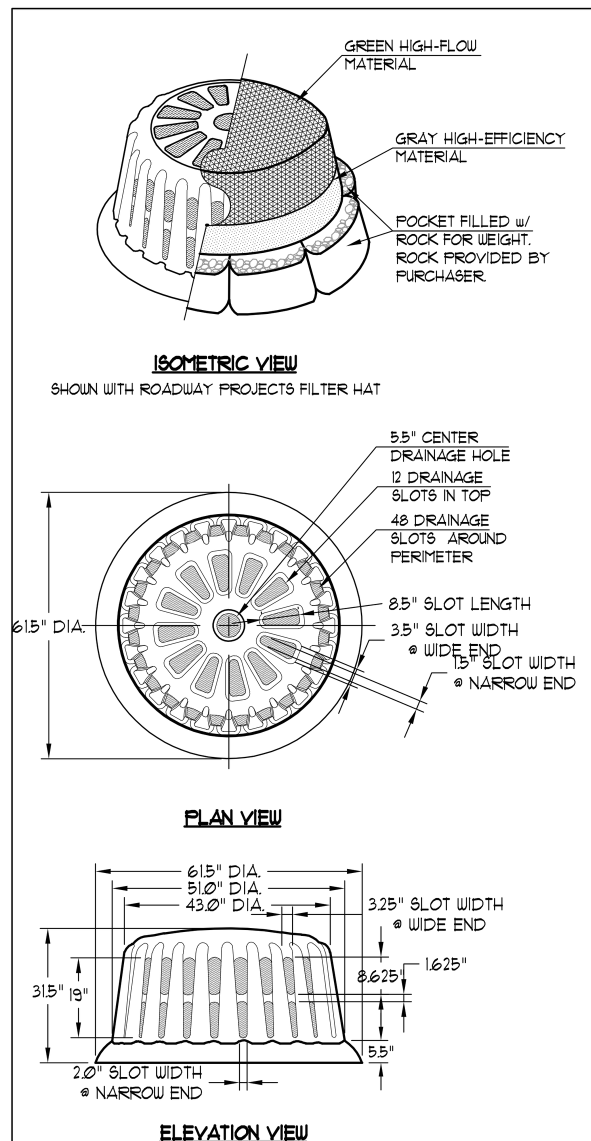

FILTER OPTIONS
FILTER HAT IS AVAILABLE IN THREE OPTIONS:
1) ALL HIGH-FLOW MATERIAL
2) ALL HIGH-EFFICIENCY MATERIAL
3) HIGH-FLOW MATERIAL ON TOP HALF OF HAT, HIGH-EFFICIENCY MATERIAL ON BOTTOM HALF (THIS FILTER COVER IS RECOMMENDED FOR ALL ROADWAY PROJECTS.)
IT IS THE PURCHASERS RESPONSIBILITY TO PURCHASE APPROPRIATE FILTER HAT. PURCHASER SHALL PROVIDE ROCK FOR FILTER POCKETS.

FILTER HAT INSTALLATION
FILTER HAT SLIDES DIRECTLY OVER FILTER FRAME. TO KEEP FILTER FRAME IN PLACE OVER STORM STRUCTURE, ROCK POCKETS ARE SEWN DIRECTLY INTO FILTER HAT MATERIAL. EVERY FILTER HAT COMES IN ONE PIECE FOR EASY INSTALLATION.

MAINTENANCE
ALL TEMPORARY EROSION, SEDIMENTATION, & POLLUTION CONTROL PRACTICES SHOULD BE INSPECTED DAILY. CONTRACTOR SHALL REMOVE SEDIMENT AND DISPOSE OF IN A PROPER MANNER. INSPECT R-100A DAILY FOR CUTS, ABRASIONS, AND PROPER INSTALLATION. REPLACE OR REPOSITION AS NECESSARY.

SPECIFICATIONS
FILTER FABRIC SILT-SAVER HAT SHALL BE BASED ON DESIGN PROFESSIONAL'S SPECIFICATIONS.

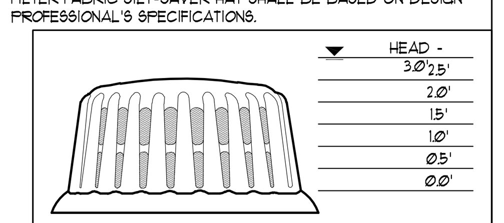

FRAME & FILTER DISCHARGE ANALYSIS

HEAD (FT)	EQUATION USED	OPENING AREA (SF)	FRAME FLOW (CFS)	FILTER AREA (SF)	FILTERED FLOW (CFS)
0.5	O	2.1	7	6	2
1.0	O	3.9	19	12	3
1.5	O	7.0	41	18	5
2.0	O	8.0	54	24	7
2.5	O	9.2	70	30	9
3.0	O	9.2	77	—	77

DUE TO NARROW SLOT, A TRANSITION WILL OCCUR BETWEEN WEIR AND ORIFICE CONDITIONS. ORIFICE FLOW WILL PROVIDE A MORE CONSERVATIVE ESTIMATE OF FLOW, THEREFORE THE LESSER OF THE ORIFICE AND WEIR FLOWS WILL BE USED FOR EACH STAGE CALCULATION.

FILTER MATERIAL ALLOWS 129 gpm/SF OR 0.29cfs/SF
ORIFICE EQUATION (O) = Q=0.6A(2gh)^0.5
P = FEET PERIMETER
h = HEAD IN FEET
Q = CAPACITY IN cfs
A = FREE OPEN AREA OF FRAME
g = 32.2 FEET-PER-SECOND/SECOND

REPLACEMENT FILTERS: MODEL # R-140

ROUND FRAME & FILTER ASSEMBLY
Model # R-100A

FRAME MATERIAL: BLACK 0.25" HMWPE
FILTER FABRIC MATERIAL: REFER TO SPEC
SCALE: NOT TO SCALE
LAST UPDATED: APRIL 2010

SILT-SAVER Sediment Control Products
SILT-SAVER, INC. 1094 CULPEPPER DRIVE, CONYERS, GA 30094 PHONE: (770) 388-7818 FAX: (770) 388-7640 TOLL FREE: 1-888-382-SILT (7458) www.siltsaver.com *OR APPROVED EQUAL*

NOTE:
REFER TO PLANS AND CALCULATIONS SHEET FOR SEDIMENT STORAGE PROVISIONS FOR EACH SPECIFIC APPLICATION OF THIS BEST MANAGEMENT PRACTICE (BMP)

"SILT-SAVER"™
TEMPORARY INLET SEDIMENT TRAP

NOT TO SCALE

7 — TEMPORARY AND PERMANENT STORM DRAIN OUTLET PROTECTION MINIMUM TAILWATER CONDITION (St)

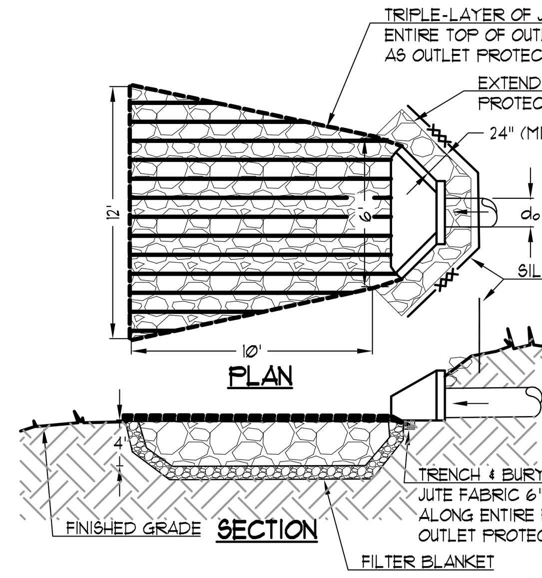

NOTES:
1. REFER TO St CHART FOR DIMENSIONS.
2. d_o = DIAMETER OF INLET PIPE
3. d_{50} = MINIMUM STONE DIAMTER
4. d_{max} = MAXIMUM STONE DIAMETER = 1.5 * d_{50}
5. D = 1.5 * d_o (MIN. 6")
6. EXTEND RIP RAP UPSTREAM TO TOP OF CHANNEL BANK.
7. INSTALL FILTER BLANKET BETWEEN RIP RAP AND SOIL FOUNDATION. FILTER BLANKET SHALL CONSIST OF GRADED GRAVEL LAYER OR SYNTEHTIC FILTER CLOTH.
8. RIP RAP APRON AND FILTER BLANKET SHALL BE GRADED LEVEL AND EXTENDED TO ACHIEVE MAXIMUM STABILITY.

MAINTENANCE:
RIP RAP SHALL BE INSPECTED AFTER LARGE RAIN EVENTS. REPAIRS SHALL BE MADE IMMEDIATELY.

TEMPORARY AND PERMANENT STORM DRAIN OUTLET PROTECTION MINIMUM TAILWATER CONDITION

NOT TO SCALE

8 — TEMPORARY HAY BALE CHECK DAM (Cd-Hb)

MAINTENANCE:
SEDIMENT SHALL BE REMOVED WHEN IT REACHES A DEPTH OF ½ THE ORIGINAL DAM HEIGHT. IF AREA IS TO BE MOWED, CHECK DAMS SHALL BE REMOVED ONCE FINAL STABILIZATION HAS OCCURRED. AFTER REMOVAL, AREA BENEATH CHECK DAMS SHALL BE SEEDED AND MULCHED IMMEDIATELY.

NOTES:
1. BALES SHOULD BE BOUND WITH WIRE OR NYLON STRING AND PLACED IN ROWS WITH BALE ENDS TIGHTLY ABUTTING ADJACENT BALES.
2. REMOVE STAKES OR REBAR AFTER STRAW BALES ARE NO LONGER IN PLACE.

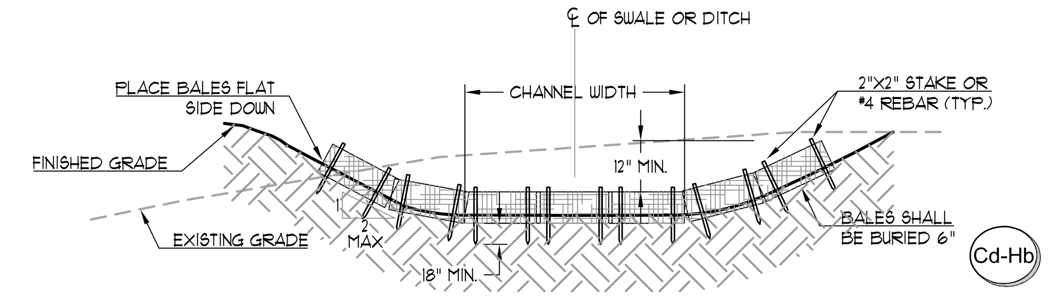

TEMPORARY HAY BALE CHECK DAM

NOT TO SCALE

9 — TEMPORARY AND PERMANENT STONE CHECK DAM (Cd-S)

MAINTENANCE:
SEDIMENT SHALL BE REMOVED WHEN IT REACHES A DEPTH OF ½ THE ORIGINAL DAM HEIGHT. IF AREA IS TO BE MOWED, CHECK DAMS SHALL BE REMOVED ONCE FINAL STABILIZATION HAS OCCURRED. AFTER REMOVAL, AREA BENEATH CHECK DAMS SHALL BE SEEDED AND MULCHED IMMEDIATELY.

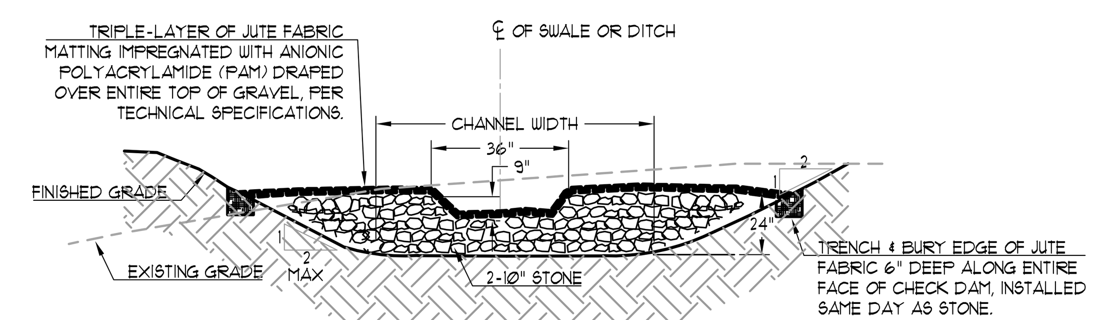

TEMPORARY AND PERMANENT STONE CHECK DAM

NOT TO SCALE

(51) PIEDMONT VEGETATIVE COVERS

MONTH	TEMPORARY Ds2	RATE / ACRE ALONE - MIX	PERMANENT Ds3	RATE / ACRE ALONE - MIX	PERMANENT Ds4
JANUARY	RYE GRASS	40 LBS.	UNHULLED BERMUDA	10LBS. 6 LBS.	BERMUDA SOD
FEBRUARY	RYE GRASS	40 LBS.	UNHULLED BERMUDA	10 LBS. 6 LBS.	
MARCH	RYE GRASS ANNUAL LESPEDEZA (2) WEEPING LOVEGRASS	2-3 BU. 30 LBS. 25 LBS. 4 LBS. 2 LBS.	UNHULLED BERMUDA	10 LBS. 6 LBS.	
APRIL	ANNUAL LESPEDEZA (2) BROWN TOP MILLET SUDAN GRASS	30 LBS. 25 LBS. 40 LBS. 60 LBS. 10 LBS.	HULLED BERMUDA	10 LBS. 6 LBS..	
MAY	WEEPING LOVEGRASS SUDAN GRASS BROWN TOP MILLET	4 LBS. 2 LBS. 60 LBS. 40 LBS. 10 LBS.	HULLED BERMUDA	10 LBS. 6 LBS.	
JUNE	WEEPING LOVEGRASS SUDAN GRASS BROWN TOP MILLET	4 LBS. 2 LBS. 60 LBS. 40 LBS. 10 LBS.	HULLED BERMUDA	10 LBS. 6 LBS.	
JULY	SAME AS JUNE		HULLED BERMUDA (IRRIGATED ONLY)	10 LBS. 6 LBS.	
AUGUST	WEEPING LOVEGRASS RYE GRASS	4 LBS. 2 LBS. 40 LBS.	HULLED BERMUDA (IRRIGATED ONLY)	10 LBS. 6 LBS.	
SEPTEMBER	RYE GRASS	40 LBS.	HULLED BERMUDA (IRRIGATED ONLY)	10 LBS. 6 LBS.	
OCTOBER	WHEAT RYE GRASS	3 BU. 0.5 BU. 40 LBS.	UNHULLED BERMUDA	10 LBS. 6 LBS.	
NOVEMBER	SAME AS OCTOBER		SAME AS OCTOBER		
DECEMBER	SAME AS OCTOBER		SAME AS OCTOBER		

1. SEED SHALL BE SCARIFIED. 2. SEED SHALL BE INOCULATED.

SOIL AMENDMENT CHART

LIME	6-12-12	AMMONIA NITRATE
60 LBS PER 1000 SQFT.	40 LBS PER 1000 SQFT.	300 LBS PER ACRE
60 LBS PER 1000 SQFT.	40 LBS PER 1000 SQFT.	300 LBS PER ACRE
60 LBS PER 1000 SQFT.	40 LBS PER 1000 SQFT.	300 LBS PER ACRE
60 LBS PER 1000 SQFT.	40 LBS PER 1000 SQFT.	300 LBS PER ACRE
60 LBS PER 1000 SQFT.	40 LBS PER 1000 SQFT.	300 LBS PER ACRE
60 LBS PER 1000 SQFT.	40 LBS PER 1000 SQFT.	300 LBS PER ACRE
60 LBS PER 1000 SQFT.	40 LBS PER 1000 SQFT.	300 LBS PER ACRE
60 LBS PER 1000 SQFT.	40 LBS PER 1000 SQFT.	300 LBS PER ACRE
60 LBS PER 1000 SQFT.	40 LBS PER 1000 SQFT.	300 LBS PER ACRE
60 LBS PER 1000 SQFT.	40 LBS PER 1000 SQFT.	300 LBS PER ACRE
60 LBS PER 1000 SQFT.	40 LBS PER 1000 SQFT.	300 LBS PER ACRE
60 LBS PER 1000 SQFT.	40 LBS PER 1000 SQFT.	300 LBS PER ACRE

NOTE: RATES INCLUDED IN THIS CHART ARE A RECOMMENDED AMOUNT. CONTRACTOR SHALL PROVIDE NECESSARY AMENDMENTS AS IDENTIFIED BY SOIL TESTING.

DISTURBED AREAS (HYDROSEEDING)

ALL LAWN AREAS SHALL BE SEEDED AS PER PIEDMONT VEGETATIVE COVERS CHART (THIS SHEET). APPLY FESCUE AT THE RATE OF FIVE (5) POUNDS PER ONE THOUSAND (1000) SQUARE FEET OR APPLY BERMUDA AT THE RATE OF TWO (2) POUNDS PER ONE THOUSAND (1000) SQUARE FEET. ALL DESIGNATED AREAS SHALL BE PLANTED WITH A HYRO-SEEDER AFTER AREAS HAVE BEEN PREPARED FOR SEEDING UNLESS PLANS SHOW OTHERWISE. HYDROMULCH 1000, AS MANUFACTURED BY PROFILE PRODUCTS CO. (OR APPROVED EQUAL), SHALL BE APPLIED AT THE RATE OF ONE THOUSAND FIVE HUNDRED (1,500) POUNDS PER ACRE ON FLAT SURFACES, TWO THOUSAND (2000) POUNDS PER ACRE ON SLOPES UP TO 3H TO 1V, AND TWO THOUSAND FIVE HUNDRED (2,500) POUNDS PER ACRE ON SLOPES GREATER THAN 3H TO 1V. APPLY SEED FERTILIZER, LIME, AND FIBER IN ONE OPERATION. EXISTING TREES AND SHRUBS IN HYDRO-SEEDED AREA SHALL BE PROTECTED DURING HYDRO-SEEDING.

BREEDLOVE LAND PLANNING
Landscape Architects • Civil Engineers
www.landplanning.net

GSWCC LEVEL 2 CERTIFICATIONS

I CERTIFY UNDER PENALTY OF LAW THAT THIS PLAN WAS PREPARED AFTER A SITE VISIT TO THE LOCATIONS DESCRIBED HEREIN BY MYSELF OR MY AUTHORIZED AGENT, UNDER MY SUPERVISION.

I CERTIFY THAT THE PERMITTEE'S EROSION, SEDIMENTATION AND POLLUTION CONTROL PLAN PROVIDES FOR AN APPROPRIATE AND COMPREHENSIVE SYSTEM OF BEST MANAGEMENT PRACTICES REQUIRED BY THE GEORGIA WATER QUALITY CONTROL ACT AND THE DOCUMENT "MANUAL FOR EROSION AND SEDIMENT CONTROL IN GEORGIA" (MANUAL)⅛ PUBLISHED BY THE STATE SOIL AND WATER CONSERVATION COMMISSION AS OF JANUARY 1 OF THE YEAR IN WHICH THE LAND-DISTURBING ACTIVITY WAS PERMITTED, PROVIDES FOR THE SAMPLING OF THE RECEIVING WATER(S) OR THE SAMPLING OF THE STORM WATER OUTFALLS AND THAT THE DESIGNED SYSTEM OF BEST MANAGEMENT PRACTICES AND SAMPLING METHODS IS EXPECTED TO MEET THE REQUIREMENTS CONTAINED IN THE GENERAL NPDES PERMIT NO. GAR 100001.

SIGNED: DATE: 02-08-2019

CERTIFIED DESIGN PROFESSIONAL: KYLE WEBB
GSWCC CERTIFICATION NO. LEVEL II # 0000072917
EXPIRATION DATE: 12-19-2020
COMPANY: BREEDLOVE LAND PLANNING, INC.

2 12 13

Menefee Architecture | Architecture Planning Design
1075 Brady Ave NW Atlanta GA 30318 | t 404.876.1011

GEORGIA REGISTERED PROFESSIONAL ENGINEER No. PE036701 KYLE WATSON WEBB

COPYRIGHT
This drawing and all reproductions copyrighted and the property of Menefee Architecture LLC and may not be used in any without their permission.
COPYRIGHT 2018

ROME TENNIS INDOOR FACILITY
Rome, Georgia

DRAWN BY	CHECKED BY
BAM	KWW

DATE
2019-02-15

REVISIONS	
NUMBER	DATE

TITLE
SITE WORK CONSTRUCTION DETAILS

PROJECT NUMBER
201811

SHEET NUMBER
C700

75% CONSTRUCTION DOCUMENTS 2/15/2019

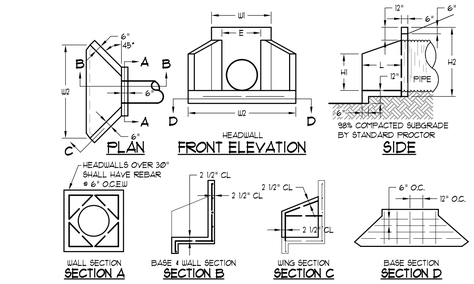

HEADWALL DIMENSIONS FOR METAL PIPE								
PIPE DIA. (in)	W1	W2	H1	H2	L	E	WEIGHT	BASE
15", 18"	3'-2"	4'-10"	1'-3"	3'-2"	1'-3"	1'-9"	155#	134#
21", 24"	3'-8"	6'-1"	1'-9"	3'-8"	1'-6"	2'-3"	210#	93#
30"	4'-2"	7'-2"	2'-0"	4'-2"	1'-10"	2'-9"	285#	135#
36"	4'-8"	8'-4"	2'-4"	4'-8"	2'-2"	3'-3"	370#	176#
42", 48"	5'-8"	10'-10"	3'-3"	5'-8"	2'-11"	4'-3"	560#	286#
54", 60"	6'-10"	11'-9"	3'-6"	6'-8"	3'-4"	5'-3"	750#	362#
72"	8'-5"	12'-7"	5'-7"	8'-0"	3'-5"	7'-0"	1060#	

NOTES:
1. ALL CONCRETE SHALL BE 4000 PSI.
2. REINFORCING STEEL SHALL BE 1/2" INTERMEDIATE GRADE.
3. 3/4" CHAMFER ON ALL EXPOSED EDGES.
4. RIP-RAP SHALL BE PER STORM DRAIN OUTLET PROTECTION.

USE NEXT LARGER SIZE WHEN INSTALLING ON REINFORCED CONCRETE PIPE.

1 HEADWALL (HW)

NOT TO SCALE

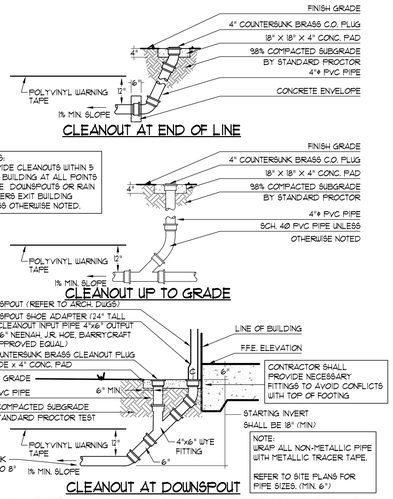

2 DOWNSPOUT/RAINLEADER CLEANOUT

NOT TO SCALE

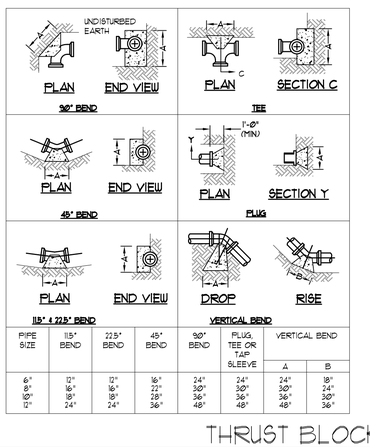

PIPE SIZE	11.5° BEND	22.5° BEND	45° BEND	90° BEND	PLUG, TEE OR TAP SLEEVE	VERTICAL BEND A	VERTICAL BEND B
6"	12"	12"	16"	24"	24"	24"	18"
8"	16"	16"	22"	30"	30"	30"	24"
10"	18"	18"	28"	36"	36"	36"	30"
12"	24"	24"	36"	48"	48"	48"	36"

3 THRUST BLOCKING

NOT TO SCALE

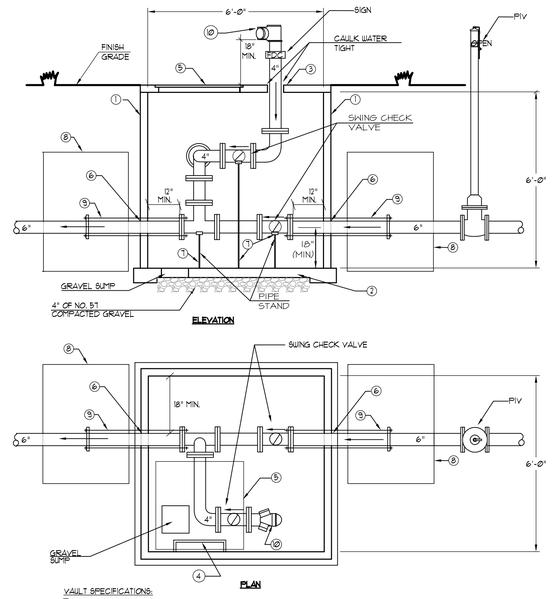

VAULT SPECIFICATIONS:

1. VAULT SHALL BE PRECASTED REINFORCED CONCRETE.
2. VAULT BOTTOM SHALL BE 4" POURED CONCRETE SLAB, SLOPED TO GRAVEL SUMP. SLAB TO BE POURED ON 4" OF NO 57 COMPACTED STONE.
3. VAULT TOP SHALL BE REINFORCED CONCRETE WITH 36"X36" ACCESS OPENING, OFFSET TO ONE SIDE.
4. ACCESS LADDER DOWELED TO WALL AND CENTERED AT ACCESS OPENING.
5. HATCH COVER: BILCO - ALUMINUM SINGLE MODEL#J-4AL OR EQUAL.
6. VAULT INLET/OUTLET PIPE OPENINGS TO BE SEALED WITH GROUT OR MORTAR. PIPE MUST NOT SUPPORT VAULT.
7. CHECK VALVE AND FITTING DEVICE TO BE SUPPORTED AT THREE (3) POINTS WITH PIPE STAND.
8. THRUST BLOCKING SHALL BE IN ACCORDANCE WITH DETAILS ON DWGS.
9. THRUST TIE RODS SHALL BE BITUMASTIC COATED AND ALL PIPE AND FITTINGS OF DUCTILE IRON.
10. DUAL FIRE DEPARTMENT CONNECTION (FDC)
11. ALL MATERIAL TO BE FURNISHED BY THE CONTRACTOR.

4 F.D.C. VAULT WITH P.I.V.

NOT TO SCALE - SCHEMATIC ONLY

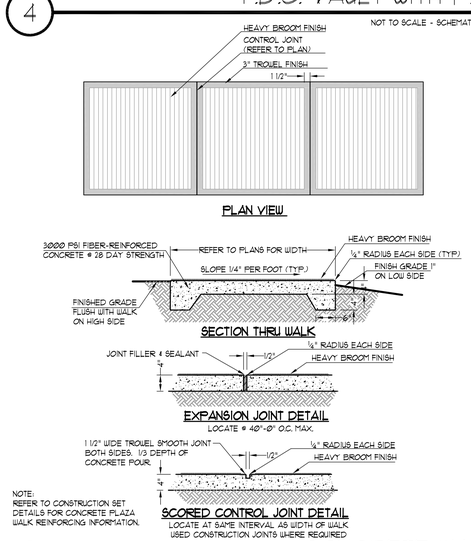

NOTE:
REFER TO CONSTRUCTION SET DETAILS FOR CONCRETE PLAZA WALK REINFORCING INFORMATION.

5 CONCRETE WALK

NOT TO SCALE

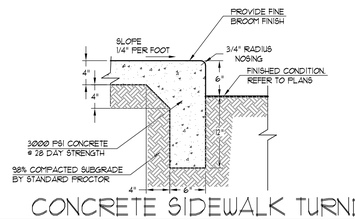

6 CONCRETE SIDEWALK TURNDOWN

NOT TO SCALE

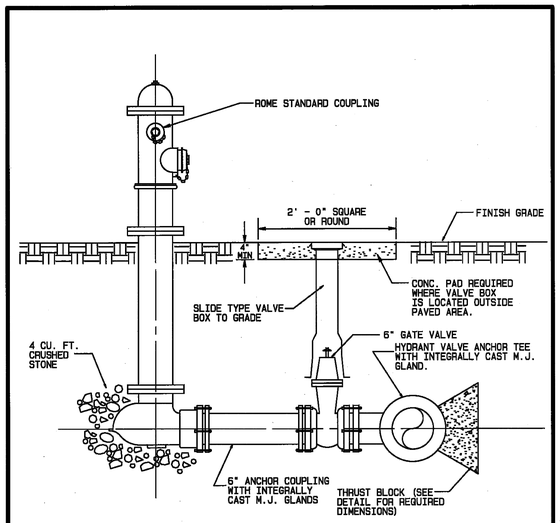

TYPICAL FIRE HYDRANT ASSEMBLY

NOT TO SCALE

NOTE: ALL FIRE HYDRANTS TO BECOME THE MAINTENANCE RESPONSIBILITY OF THE CITY OF ROME SHALL BE MUELLER CENTURION.

CITY OF ROME, GEORGIA ENGINEERING DEPARTMENT	
TYPICAL FIRE HYDRANT ASSEMBLY STANDARD DETAIL	
SCALE: AS SHOWN	DRAWN BY: BSI
DATE: MARCH 1998	FINAL APPROVAL:
EFFECTIVE DATE: 04-21-15	SHEET 1 OF 1

A-1

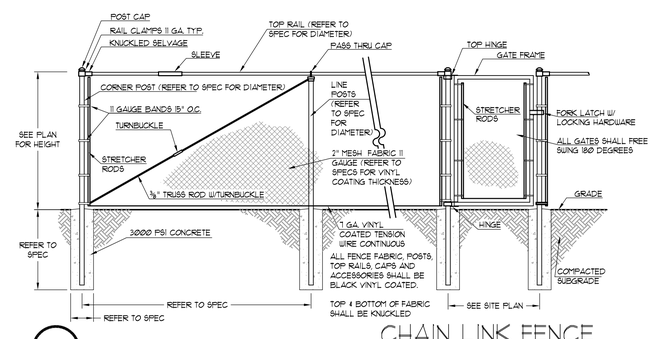

7 CHAIN LINK FENCE

NOT TO SCALE

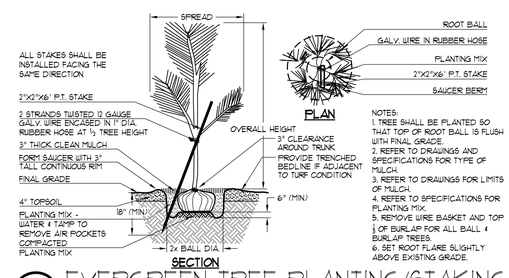

NOTES:
1. TREE SHALL BE PLANTED SO THAT TOP OF ROOT BALL IS FLUSH WITH FINAL GRADE.
2. REFER TO DRAWINGS AND SPECIFICATIONS FOR TYPE OF MULCH.
3. REFER TO DRAWINGS FOR LIMITS OF MULCH.
4. REFER TO SPECIFICATIONS FOR PLANTING MIX.
5. REMOVE WIRE BASKET AND TOP 1/3 OF BURLAP FOR ALL B&B & BURLAP TREES.
6. SET ROOT FLARE SLIGHTLY ABOVE EXISTING GRADE.

8 EVERGREEN TREE PLANTING/STAKING

NOT TO SCALE

Menefee Architecture | Architecture Planning Design
1075 Brady Ave NW Atlanta GA 30318 | t 404.876.1011

GEORGIA REGISTERED No. PE038701 PROFESSIONAL ENGINEER KYLE WATSON WEBB

COPYRIGHT

This drawing and all reproductions copyrighted and the property of Menefee Architecture LLC and may not be used in any without their permission.

COPYRIGHT 2018

ROME TENNIS INDOOR FACILITY

Rome, Georgia

DRAWN BY	CHECKED BY
BAM	KWW

DATE
2019-02-15

REVISIONS

NUMBER	DATE

TITLE
SITE WORK CONSTRUCTION DETAILS

PROJECT NUMBER
201811

SHEET NUMBER
C701

75% CONSTRUCTION DOCUMENTS 2/15/2019

BREEDLOVE LAND PLANNING
Landscape Architects • Civil Engineers
www.landplanning.net

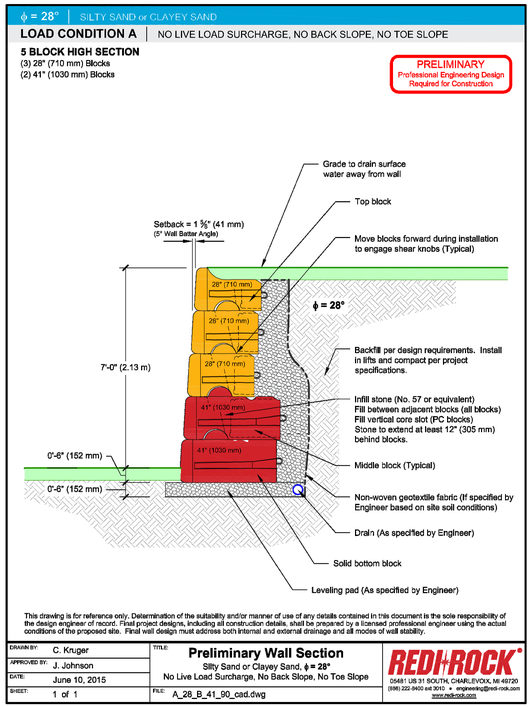

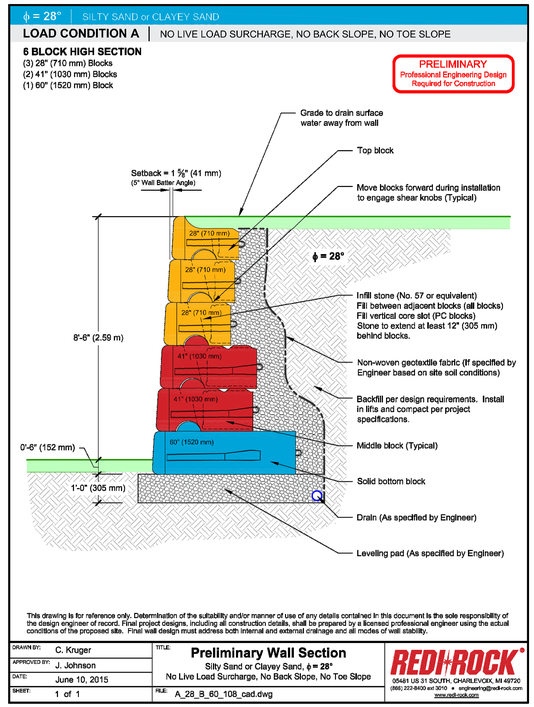

PRELIMINARY SECTIONS PROVIDED BY MANUFACTURER. FOR REFERENCE ONLY. CONTRACTOR SHALL BE RESPONSIBLE FOR PROVIDING FULL DESIGN OF RETAINING WALL TAKING INTO CONSIDERATION SITE GRADING & SITE SPECIFIC STRUCTURAL LOADS

BREEDLOVE
LAND PLANNING
Landscape Architects • Civil Engineers
www.landplanning.net

Menefee Architecture
Architecture | Planning | Design
1075 Brady Ave NW Atlanta GA 30318 | t 404.876.1011

GEORGIA REGISTERED No. PE036701 PROFESSIONAL ENGINEER KYLE WATSON WEBB

COPYRIGHT
This drawing and all reproductions copyrighted and the property of Menefee Architecture LLC and may not be used in any without their permission.
COPYRIGHT 2018

ROME TENNIS INDOOR FACILITY

Rome, Georgia

DRAWN BY	CHECKED BY
BAM	KWW

DATE
2019-02-15

REVISIONS	
NUMBER	DATE

TITLE
SITE WORK CONSTRUCTION DETAILS

PROJECT NUMBER
201811

SHEET NUMBER
C702

75% CONSTRUCTION DOCUMENTS 2/15/2019

STEEL COLUMN / FOOTING TYPE INDICATOR

COL SIZE	STEEL COLUMN SIZE
BP-x	BASE PLATE MARK
Fx.x (-0'-0")	FOOTING MARK (T/FTG ELEVATION)
P-x (-0'-0")	PEDESTAL MARK (T/PEDESTAL ELEVATION)

FOUNDATION STEP INDICATOR

(-x'-x") T/FOOTING ELEVATION
(-x'-x") T/FOOTING ELEVATION

OPENING INDICATOR

RECESS / DEPRESSION INDICATOR

SECTION DETAIL INDICATOR

DETAIL NUMBER
SHEET NUMBER
NOTE (SIM, TYP)

STRUCTURAL STEEL CONNECTION AXIAL FORCE

(XXk) AXIAL FORCE

PLAN DETAIL INDICATOR

DETAIL NUMBER
SHEET NUMBER
NOTE (SIM, TYP)

SLOPE INDICATOR

x
x

CONCRETE SLAB / METAL DECK SPAN INDICATOR

STRUCTURAL STEEL MOMENT CONNECTION

STRUCTURAL STEEL BEAM DESIGNATION

W14X26 (XX) c=x"
(XXk) (XXk)

BEAM SIZE
NUMBER OF STUDS UNIFORMLY SPACED ALONG BEAM
BEAM CAMBER
BEAM SERVICE REACTION

STRUCTURAL STEEL BEAM SPLICE DESIGNATION

CL SPLICE

STRUCTURAL CONCRETE BEAM DESIGNATION

CB XXX PB XXX

CBX INDICATES CONVENTIONALLY REINFORCED CONCRETE BEAM MARK. BEAM WIDTH MAY VERY BASED UPON EDGE OF SLAB DIMENSION.

PBX INDICATES POST-TENSIONED CONCRETE BEAM MARK. BEAM WIDTH MAY VERY BASED UPON EDGE OF SLAB DIMENSION.

AUGER CAST PILES

T INDICATES TENSION PILE

INDICATES BATTERED PILE

[X'-X"] INDICATES EXISTING DIMENSIONS TO BE FIELD VERIFIED

12 NTS

STRUCTURAL GRAPHIC SYMBOLS

HATCH DESIGNATIONS

CONCRETE

LOAD BEARING CMU

GRANULAR SUBBASE / GRANULAR BASEFILL

EARTH

BRICK

6 NTS

STRUCTURAL DESIGNATIONS

S001 STRUCTURAL ABBREVIATIONS, SYMBOLS, AND LEGENDS
S002 GENERAL NOTES
S003 GENERAL NOTES
S101A FOUNDATION PLAN - PART A
S101B FOUNDATION PLAN - PART B
S301 SECTIONS AND DETAILS

3 NTS

STRUCTURAL DRAWING LIST

AB	ANCHOR BOLT
ADDL	ADDITIONAL
ADH	ADHESIVE
AFF	ABOVE FINISHED FLOOR
AFS	ABOVE FINISHED SLAB
ALT	ALTERNATE
ARCH	ARCHITECT / ARCHITECTURAL
B	BOTTOM (4#5B)
B/xxx	BOTTOM OF xxx
BFF	BELOW FINISHED FLOOR
BFS	BELOW FINISHED SLAB
BLDG	BUILDING
BM	BEAM
BOT	BOTTOM
BP	BASE PLATE
BRG	BEARING
BTW	BETWEEN
CIP	CAST IN PLACE
CJ	CONTRACTION / CONSTRUCTION JOINT
CL	CENTERLINE
CLR	CLEAR
CMU	CONCRETE MASONRY UNIT
COL	COLUMN
COMP	COMPOSITE
CONC	CONCRETE
CONN	CONNECTION
CONST	CONSTRUCTION
CONT	CONTINUOUS
COORD	COORDINATE
CP	COMPLETE PENETRATION
CS	COLUMN STRIP
CW	CURTAIN WALL
DBA	DEFORMED BAR ANCHOR
DBE	DECK BEARING ELEVATION
DBL	DOUBLE
DET	DETAIL
DIA	DIAMETER
DL	DEAD LOAD
DN	DOWN
DP	DRILLED PIER
DWL	DOWEL
DWG	DRAWING
EE	EACH END
EF	EACH FACE
EJ	EXPANSION JOINT
EL	ELEVATION
ELEV	ELEVATOR
EMBED	EMBEDMENT / EMBEDDED
ENG	ENGINEER
EOS	EDGE OF SLAB
EQ	EQUAL
EQUIP	EQUIPMENT
EW	EACH WAY
EXIST	EXISTING
EXP	EXPANSION
EXT	EXTERIOR
F/xxx	FACE OF xxx
FD	FLOOR DRAIN
FDN	FOUNDATION
FIN	FINISHED
FLR	FLOOR
FS	FAR SIDE
FT	FEET
FTG	FOOTING
FV	FIELD VERIFY
GA	GAGE
GALV	GALVANIZED
GR	GRADE
HDD	HEADED
HORIZ	HORIZONTAL
HS	HIGH STRENGTH
INT	INTERIOR
JT	JOINT
K	KIPS
KSF	KIPS PER SQUARE FOOT
KSI	KIPS PER SQUARE INCH
LBS	POUNDS
LF	LINEAR FEET
LG	LONG
LL	LIVE LOAD
LLH	LONG LEG HORIZONTAL
LLV	LONG LEG VERTICAL
LONG	LONGITUDINAL
LW	LIGHT WEIGHT
MATL	MATERIAL
MAX	MAXIMUM
MECH	MECHANICAL
MEP	MECHANICAL / ELECTRICAL / PLUMBING
MFR	MANUFACTURER / MANUFACTURING
MIN	MINIMUM
MISC	MISCELLANEOUS
MS	MIDDLE STRIP
MTL	METAL
N/A	NOT APPLICABLE
NIC	NOT IN CONTRACT
NS	NEAR SIDE
NTS	NOT TO SCALE
NW	NORMAL WEIGHT
OPNG	OPENING
OPP	OPPOSITE
PART	PARTIAL
PC	PRECAST CONCRETE
PEN	PENETRATION
PJF	PREFORMED JOINT FILLER
PL	PLATE
PSF	POUNDS PER SQUARE FOOT
PSI	POUNDS PER SQUARE INCH
PT	POST-TENSIONING
R	REACTION
RAD	RADIUS
RD	ROOF DRAIN
REF	REFERENCE
REINF	REINFORCING / REINFORCEMENT
REQD	REQUIRED
REV	REVISION / REVISED
SCHED	SCHEDULE
SECT	SECTION
SF	SQUARE FEET
SIM	SIMILAR
SPA	SPACES
SPECS	SPECIFICATIONS
SQ	SQUARE
STD	STANDARD
STIFF	STIFFENER
STL	STEEL
STR	STRUCTURE / STRUCTURAL
SW	SHEAR WALL
SYM	SYMMETRICAL
T	TOP (4#5T)
T&B	TOP AND BOTTOM
T/xxx	TOP OF xxx
TEMP	TEMPERATURE
THK	THICK
THRD	THREADED
TRANS	TRANSVERSE
TYP	TYPICAL
UNO	UNLESS NOTED OTHERWISE
VERT	VERTICAL
W/	WITH
W/O	WITHOUT
WP	WORK POINT
WT	WEIGHT
WWF	WELDED WIRE FABRIC

10 NTS

STRUCTURAL ABBREVIATIONS

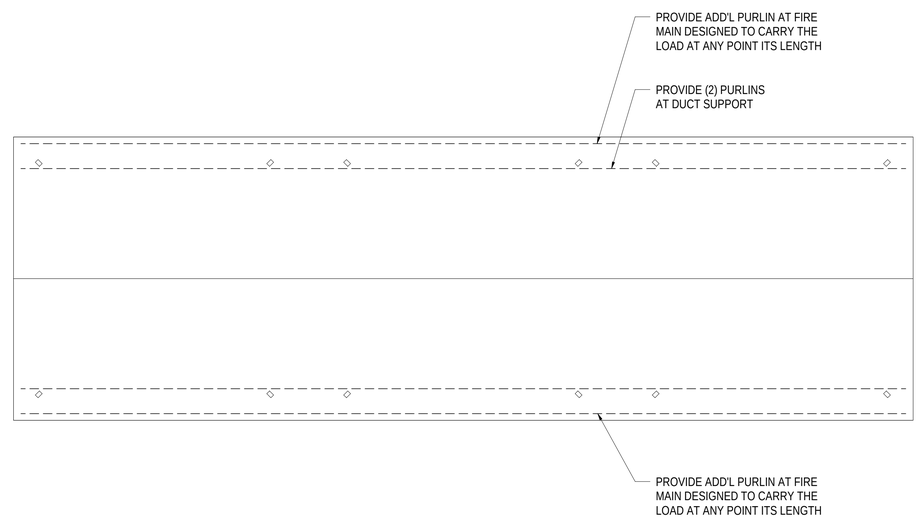

5 1/32" = 1'-0"

ROOF LOAD DIAGRAM

Menefee Architecture | Architecture Planning Design
1075 Brady Ave NW Atlanta GA 30318 I t 404.876.1011

COPYRIGHT

This drawing and all reproductions are copyrighted and the property of Menefee Architecture LLC and may not be used in any way without their permission.

COPYRIGHT 2018

ROME TENNIS - INDOOR COURTS
Rome, Georgia

DRAWN BY	CHECKED BY
MAC	JLM

DATE
2019-02-15

REVISIONS	
NUMBER	DATE

TITL
STRUCTURAL ABBREVIATIONS SYMBOLS, AND LEGENDS

PROJECT
201811

SHEET
S001

75% CONSTRUCTION DOCUMENTS 2/15/2019

GENERAL

1. NO PROVISION OF ANY REFERENCED STANDARD SPECIFICATION, MANUAL OR CODE (WHETHER OR NOT SPECIFICALLY INCORPORATED BY REFERENCE IN THE CONTRACT DOCUMENTS) SHALL BE EFFECTIVE TO CHANGE THE DUTIES AND RESPONSIBILITIES OF OWNER, CONTRACTOR, DESIGN PROFESSIONAL, SUPPLIER, OR ANY OF THEIR CONSULTANTS, AGENTS, OR EMPLOYEES FROM THOSE SET FORTH IN THE CONTRACT DOCUMENTS. NOR SHALL IT BE EFFECTIVE TO ASSIGN TO THE DESIGN PROFESSIONAL OF RECORD OR ANY OF THE DESIGN PROFESSIONAL OF RECORD'S CONSULTANTS, AGENTS, OR EMPLOYEES ANY DUTY OR AUTHORITY TO SUPERVISE OR DIRECT THE FURNISHING OR PERFORMANCE OF THE WORK OR ANY DUTY OR AUTHORITY TO UNDERTAKE RESPONSIBILITIES CONTRARY TO THE PROVISIONS OF THE CONTRACT DOCUMENTS.

2. CONTRACT DOCUMENTS INCLUDE, BUT ARE NOT LIMITED TO, THE STRUCTURAL DOCUMENTS (DRAWINGS AND SPECIFICATIONS), BUT DO NOT INCLUDE SHOP DRAWINGS, VENDOR DRAWINGS, OR MATERIAL PREPARED AND SUBMITTED BY THE CONTRACTOR.

3. REFERENCE TO STANDARD SPECIFICATIONS OF ANY TECHNICAL SOCIETY, ORGANIZATION, OR ASSOCIATION OR TO CODES OF LOCAL OR STATE AUTHORITIES, SHALL MEAN THE LATEST STANDARD, CODE, SPECIFICATION OR TENTATIVE SPECIFICATION ADOPTED AT THE DATE OF TAKING BIDS, UNLESS SPECIFICALLY STATED OTHERWISE.

4. CONTRACT DOCUMENTS SHALL GOVERN IN THE EVENT OF A CONFLICT WITH THE CODE OF PRACTICE OR SPECIFICATIONS OF ACI, PCI, AISC, SJI OR OTHER STANDARDS. WHERE A CONFLICT OCCURS WITHIN THE CONTRACT DOCUMENTS, THE STRICTEST REQUIREMENT SHALL GOVERN.

5. MATERIAL, WORKMANSHIP, AND DESIGN SHALL CONFORM TO THE REFERENCED BUILDING CODE.

6. CONTRACTOR SHALL COORDINATE THE STRUCTURAL DOCUMENTS WITH THE ARCHITECTURAL, MECHANICAL, ELECTRICAL, PLUMBING AND CIVIL DOCUMENTS. DESIGN PROFESSIONAL SHALL BE NOTIFIED OF ANY DISCREPANCY OR OMISSION. FOR DIMENSIONS NOT SHOWN ON THE STRUCTURAL DRAWINGS SEE THE ARCHITECTURAL DRAWINGS.

7. CONTRACTOR SHALL VERIFY EXISTING DIMENSIONS, ELEVATIONS, AND SITE CONDITIONS BEFORE STARTING WORK. DESIGN PROFESSIONAL SHALL BE NOTIFIED OF ANY DISCREPANCY.

8. CONTRACTOR HAS SOLE RESPONSIBILITY FOR MEANS, METHODS, TECHNIQUES, SEQUENCES, AND PROCEDURES OF CONSTRUCTION.

9. THE STRUCTURE IS STABLE ONLY IN ITS COMPLETED FORM. TEMPORARY SUPPORTS REQUIRED FOR STABILITY DURING ALL INTERMEDIATE STAGES OF CONSTRUCTION SHALL BE DESIGNED, FURNISHED, AND INSTALLED BY THE CONTRACTOR.

10. CONTRACTOR HAS SOLE RESPONSIBILITY TO COMPLY WITH ALL OSHA REGULATIONS.

11. ELECTRONIC DRAWING FILES WILL NOT BE PROVIDED TO THE CONTRACTOR. REPRODUCTION OF STRUCTURAL DRAWINGS FOR SHOP DRAWINGS IS NOT PERMITTED.

12. REVIEW OF SUBMITTALS OR SHOP DRAWINGS BY THE DESIGN PROFESSIONAL DOES NOT RELIEVE THE CONTRACTOR OF THE SOLE RESPONSIBILITY TO REVIEW AND CHECK ALL SUBMITTALS AND SHOP DRAWINGS BEFORE SUBMITTING TO THE DESIGN PROFESSIONAL. CONTRACTOR REMAINS SOLELY RESPONSIBLE FOR ERRORS AND OMISSIONS ASSOCIATED WITH THE PREPARATION OF SHOP DRAWINGS AS THEY PERTAIN TO MEMBER SIZES, DETAILS, AND DIMENSIONS SPECIFIED IN THE CONTRACT DOCUMENTS.

13. DETAILS LABELED "TYPICAL" ON THE STRUCTURAL DRAWINGS APPLY TO ALL SITUATIONS OCCURRING ON THE PROJECT THAT ARE THE SAME OR SIMILAR TO THE TYPICAL DETAILS UNLESS THOSE LOCATIONS ARE SPECIFICALLY DETAILED OTHERWISE.

14. STRUCTURAL DESIGN PROFESSIONAL IS NOT RESPONSIBLE FOR THE DESIGN OF STEEL STAIRS, HANDRAILS, CURTAIN WALL/WINDOW WALL SYSTEMS, COLD-FORMED METAL FRAMING, OR OTHER SYSTEMS NOT SHOWN IN THE STRUCTURAL DOCUMENTS. SUCH SYSTEMS SHALL BE DESIGNED, FURNISHED, AND INSTALLED AS REQUIRED BY OTHER PORTIONS OF THE CONTRACT DOCUMENTS.

CODE/DESIGN CRITERIA

1. STRUCTURE IS DESIGNED IN ACCORDANCE WITH THE FOLLOWING:

   - INTERNATIONAL BUILDING CODE, 2012 EDITION WITH LATEST GA AMENDMENTS.

2. GRAVITY LOADS

   2.1 UNIFORM FLOOR LIVE LOADS (REDUCED AS ALLOWED BY THE BUILDING CODE):

   - GENERAL AREAS 100 PSF

   2.2 UNIFORM ROOF LIVE LOADS (REDUCED AS ALLOWED BY THE BUILDING CODE):

   - ROOF 20 PSF

   - GROUND SNOW LOAD 5 PSF
   - RISK CATEGORY II
   - SNOW EXPOSURE COEFFICIENT = 1.0
   - SNOW LOAD IMPORTANCE FACTOR = 1.0
   - THERMAL FACTOR = 1.2

   2.3 DEAD LOADS (IN ADDITION TO STRUCTURE SELF-WEIGHT):

   ROOF:
   - ROOFING WEIGHT BY PEMB MANUFACTURER
   - MISCELLANEOUS 5 PSF
   - SEE DIAGRAM FOR ADDITIONAL HANGING LOADS.

3. WIND LOADS:

   - 115 MPH BASIC WIND SPEED (ULTIMATE)
   - IMPORTANCE FACTOR = 1.0
   - EXPOSURE B
   - INTERNAL PRESSURE COEFFICIENT = +/- 0.18

   - COMPONENT AND CLADDING DESIGN WIND PRESSURES (BASED ON A=25 SF)

     - WALLS - WITHIN 13 FT OF CORNER = -30 PSF/+23 PSF
     - WALLS — TYPICAL = -25 PSF/+23 PSF
     - ROOF — CORNER ZONE 3 = -52.2 PSF/+16 PSF
     - ROOF — WITHIN 13 FT OF EDGE = -34.5 PSF/+16 PSF
     - ROOF — TYPICAL = -21.4 PSF/+16 PSF

4. EARTHQUAKE LOADS:

   - SEISMIC IMPORTANCE FACTOR: I =1.0
   - RISK CATEGORY: II
   - SHORT PERIOD MAPPED SPECTRAL RESPONSE COEFFICIENT, S_S = 0.324
   - 1 SECOND PERIOD MAPPED SPECTRAL RESPONSE COEFFICIENT, S1 = 0.113
   - SITE CLASS D
   - SHORT PERIOD DESIGN SPECTRAL RESPONSE COEFFICIENT, SD_S = 0.332
   - 1 SECOND PERIOD DESIGN SPECTRAL RESPONSE COEFFICIENT, SD1 = 0.176
   - SEISMIC DESIGN CATEGORY: C
   - BASIC SEISMIC-FORCE RESISTING SYSTEM: STEEL NOT SPECIFICALLY DETAILED FOR SEISMIC
   - OVER STRENGTH FACTOR, OMEGA = 3
   - RESPONSE MODIFICATION FACTOR, R = 3
   - ANALYSIS PROCEDURE: EQUIVALENT LATERAL FORCE PROCEDURE

5. SPECIAL INSPECTIONS:

   5.1 THE STRUCTURAL TESTING/INSPECTION AGENCY, SEE SPECIFICATION SECTION 014525, WILL PERFORM SPECIAL INSPECTIONS AS REQUIRED BY CHAPTER 17 OF THE BUILDING CODE. MATERIALS AND WORK TO BE INSPECTED INCLUDE CONCRETE AND STEEL CONSTRUCTION. SEE SPECIFICATION SECTION 014525 FOR A COMPLETE LIST OF WORK REQUIRING SPECIAL INSPECTIONS.

   5.2 SPECIAL INSPECTION AS REQUIRED BY CHAPTER 17 OF THE BUILDING CODE ARE REQUIRED FOR STRUCTURAL COMPONENTS AND ASSEMBLIES WHICH ARE NOT FABRICATED AT THE CONSTRUCTION JOB SITE INCLUDING BUT NOT LIMITED TO FLOOR AND ROOF TRUSSES AND JOISTS OF WOOD AND STEEL MATERIALS AND STRUCTURAL STEEL FRAMING.

   5.3 SPECIAL INSPECTION AS REQUIRED BY CHAPTER 17 OF THE BUILDING CODE MAY BE WAIVED FOR ITEMS WHICH ARE PRODUCED ON THE PREMISES OF A FABRICATOR REGISTERED AND APPROVED TO PERFORM SUCH WORK WITHOUT SPECIAL INSPECTION. APPROVAL SHALL BE BASED UPON REVIEW OF THE FABRICATOR'S WRITTEN PROCEDURAL AND QUALITY CONTROL MANUALS AND BY PERIODIC AUDITING OF FABRICATION PRACTICES BY AN APPROVED SPECIAL INSPECTION AGENCY. THE APPROVED FABRICATOR SHALL SUBMIT A CERTIFICATE OF COMPLIANCE TO THE CHIEF COMMERCIAL BUILDING INSPECTOR OR HIS DESIGNEE WHICH STATES THAT THE FABRICATION WORK WAS PERFORMED IN ACCORDANCE WITH THE APPROVED CONSTRUCTION DOCUMENTS.

   5.4 THE PROJECT OWNER WILL EMPLOY ONE OR MORE SPECIAL INSPECTORS TO PERFORM INSPECTIONS AS REQUIRED BY CHAPTER 17 OF THE BUILDING CODE DURING CONSTRUCTION OF THE PROJECT. DOCUMENTATION THAT SUMMARIZES THE QUALIFICATION AND CREDENTIALS OF EACH SPECIAL INSPECTOR AND DEMONSTRATES COMPETENCE FOR INSPECTION OF EACH PARTICULAR TYPE OF CONSTRUCTION REQUIRING SPECIAL INSPECTION SHALL BE SUBMITTED TO THE CHIEF COMMERCIAL BUILDING INSPECTOR OR HIS DESIGNEE FOR REVIEW AND APPROVAL PRIOR TO CONSTRUCTION.

   5.5 APPROVED SPECIAL INSPECTORS SHALL FURNISH INSPECTION REPORTS TO THE CHIEF COMMERCIAL BUILDING INSPECTOR OR HIS DESIGNEE AND TO THE DESIGN PROFESSIONAL WHICH INDICATE THAT THE WORK INSPECTED WAS DONE IN CONFORMANCE WITH THE APPROVED CONSTRUCTION DOCUMENTS. A FINAL REPORT WHICH DOCUMENTS THE RESULTS OF THE SPECIAL INSPECTIONS PERFORMED INCLUDING CORRECTION OF ANY DISCREPANCIES IDENTIFIED DURING INSPECTION SHALL BE SUBMITTED PERIODICALLY AT A FREQUENCY APPROVED BY CHIEF COMMERCIAL BUILDING INSPECTOR PRIOR TO CONSTRUCTION.

6. NO PROVISIONS HAVE BEEN MADE FOR FUTURE HORIZONTAL OR VERTICAL EXPANSION.

FOUNDATION

1. FOUNDATION DESIGN IS BASED ON THE RECOMMENDATIONS IN THE GEOTECHNICAL REPORT PREPARED BY GEOHYDRO, REPORT NUMBER 181185.20 DATED DECEMBER 14, 2018. DESIGN PROFESSIONAL IS NOT RESPONSIBLE FOR SUBSURFACE CONDITIONS ENCOUNTERED IN THE FIELD DIFFERENT TO THOSE ASSUMED FOR DESIGN.

2. STRUCTURAL TESTING/INSPECTION AGENCY SHALL CERTIFY THE BEARING MEDIUM.

3. INDIVIDUAL SPREAD FOOTINGS AND CONTINUOUS FOOTINGS SHALL BEAR ON SOIL CAPABLE OF SUPPORTING 3000 PSF AND 3000 PSF, RESPECTIVELY.

   3.1 NO FOOTINGS SHALL BEAR ON ROCK. UNDERCUT ROCK A MINIMUM OF 2 FEET BELOW BOTTOM OF FOOTING AND REPLACE WITH STRUCTURAL FILL.

4. FOUNDATION WALLS ARE DESIGNED FOR LATERAL PRESSURES DUE TO THE FOLLOWING EQUIVALENT FLUID DENSITIES:

   - WALLS SUPPORTED AT TOP (AT-REST CONDITION): 68 PCF
   - WALLS FREE TO DISPLACE AT TOP (ACTIVE CONDITION): 47 PCF

5. PROOF ROLL BUILDING AREAS WITH TWO COMPLETE COVERAGES OF A LOADED DUMP-TRUCK OR SCRAPER. REPLACE SOFT AREAS WITH COMPACTED STRUCTURAL FILL AS REQUIRED BY THE SPECIFICATIONS.

6. STRUCTURAL FILL SHALL CONTAIN NO ORGANIC MATERIAL AND BE APPROVED BY A GEOTECHNICAL ENGINEER PRIOR TO PLACEMENT. STRUCTURAL FILL UNDER SLABS AND WITHIN 10'-0" OF THE BUILDING FOOTPRINT SHALL BE PLACED IN LIFTS OF THICKNESS DETERMINED BY THE INDEPENDENT TESTING AGENCY AND COMPACTED TO AT LEAST 95% OF ITS STANDARD PROCTOR MAXIMUM DRY DENSITY IN ACCORDANCE WITH ASTM D698. THE TOP 12" SUB-BASE UNDER SLABS ON GRADE SHALL BE COMPACTED TO AT LEAST 98% OF ITS STANDARD PROCTOR MAXIMUM DRY DENSITY. ALL BACKFILL, COMPACTION AND PROOF ROLLING OPERATIONS SHALL BE OBSERVED BY AN INDEPENDENT TESTING LABORATORY.

7. SLABS-ON-GRADE SHALL BE PLACED ON A 4" GRANULAR BASE, COMPACTED TO 98% OF ITS STANDARD PROCTOR MAXIMUM DRY DENSITY IN ACCORDANCE WITH ASTM D698, AND COVERED WITH A 10 MIL CONTINUOUSLY SEALED VAPOR BARRIER. THE BASE FOR SLABS-ON-GRADE SHALL BE INSPECTED BY A GEOTECHNICAL ENGINEER PRIOR TO EACH PLACEMENT OF CONCRETE.

8. BACKFILL SHALL NOT BE PLACED AGAINST EXTERIOR OR RETAINING WALLS UNTIL THE WALLS HAVE ACHIEVED THEIR DESIGN STRENGTH AND THEIR LATERAL SUPPORT ELEMENTS ARE INSTALLED. PROVIDE ADEQUATE DRAINAGE AT BASEMENT AND RETAINING WALLS (SEE ARCHITECTURAL).

9. FOOTINGS SHALL BE CENTERED ABOUT COLUMN LINES UNLESS NOTED OTHERWISE.

10. ALL FOOTINGS AND TURN DOWN SLAB EDGES SHALL PENETRATE TO A MINIMUM DEPTH OF 18" BELOW FINISHED GRADE.

REINFORCEMENT

1. REINFORCING STEEL SHALL CONFORM TO ASTM A615, GRADE 60, UNLESS NOTED OTHERWISE.

2. WELDED WIRE FABRIC SHALL CONFORM TO ASTM A1064 AND HAVE MINIMUM SIDE AND END LAPS OF 8".

3. SUBMIT SHOP DRAWINGS WHICH ADEQUATELY DEPICT THE REINFORCING BAR SIZES AND PLACEMENT. WRITTEN DESCRIPTION OF REINFORCEMENT WITHOUT ADEQUATE SECTIONS, ELEVATIONS, AND DETAILS IS NOT ACCEPTABLE.

4. SPLICES SHALL BE CLASS B IN ACCORDANCE WITH ACI 318, UNLESS NOTED OTHERWISE. REINFORCEMENT SHALL BE SPLICED ONLY AT LOCATIONS SHOWN OR NOTED IN THE STRUCTURAL DOCUMENTS, EXCEPT REINFORCEMENT MARKED "CONTINUOUS" CAN BE SPLICED AT LOCATIONS DETERMINED BY CONTRACTOR. SPLICES AT OTHER LOCATIONS SHALL BE APPROVED IN WRITING BY THE DESIGN PROFESSIONAL.

5. PROVIDE DOWELS FROM FOUNDATIONS THE SAME SIZE AND NUMBER AS THE VERTICAL WALL OR COLUMN REINFORCING, UNLESS NOTED OTHERWISE.

6. PLACE REINFORCEMENT AS FOLLOWS, UNLESS NOTED OTHERWISE:

   6.1 CONCRETE REINFORCEMENT COVER

   EXPOSED TO EARTH OR WEATHER:
   - UNFORMED CAST AGAINST EARTH 3" CLEAR
   - FORMED #6 AND LARGER 2" CLEAR
   - FORMED #5 AND SMALLER 1-1/2" CLEAR

   NOT EXPOSED TO EARTH OR WEATHER:
   - WALLS 1" CLEAR
   - COLUMNS (TIES) 1-1/2" CLEAR
   - SLABS 3/4" CLEAR

   6.2 MASONRY REINFORCING STEEL SHALL BE PLACED IN THE CENTER OF THE WALL UNLESS NOTED OTHERWISE.

7. REINFORCING STEEL DESIGNATED CONTINUOUS SHALL BE LAPPED AS FOLLOWS:

   - CONCRETE REINFORCEMENT: CLASS B TENSION LAP

   - MASONRY REINFORCEMENT: SEE SCHEDULE ON DETAIL

8. ADHESIVE FOR REINFORCING DOWELS IN EXISTING CONCRETE SHALL BE EPOXY ADHESIVE THAT HAS BEEN TESTED IN ACCORDANCE WITH ACI 355.4-11 AND ICC/ES AC 308 TO MEET REQUIREMENTS OF THE BUILDING CODE FOR BOTH CRACKED AND UN-CRACKED CONCRETE. MINIMUM EMBEDMENT LENGTH SHALL BE 12 BAR DIAMETERS, UNLESS NOTED OTHERWISE. SUBMIT PRODUCT FOR APPROVAL.

CAST-IN-PLACE CONCRETE

1. CONCRETE WORK SHALL CONFORM TO ACI 318 AND CRSI STANDARDS.

2. CONCRETE SHALL HAVE THE FOLLOWING MINIMUM (OR MAXIMUM) SPECIFIED PROPERTIES:

   2.1 NORMAL WEIGHT STRUCTURAL CONCRETE:

ELEMENT	EXPOSURE CLASS	STRENGTH (28 DAY)	W/CM (MAX)
▪ FOOTINGS, PEDESTALS	F0 S0 P0 C1	3000 PSI	0.50
▪ SITE RETAINING WALLS	F2 S0 P0 C1	4500 PSI	0.45
▪ INTERIOR GROUND SUPPORTED SLAB	F2 S0 P0 C1	4000 PSI	

3. PIPES, CONDUITS OR DUCTS SHALL NOT EXCEED ONE-THIRD THE SLAB OR WALL THICKNESS INCLUDING CROSSING UNLESS SPECIFICALLY DETAILED IN THE STRUCTURAL DOCUMENTS. ALL PIPES AND DUCTS SHALL BE PLACED IN THE MIDDLE THIRD OF THE SLAB OR WALL THICKNESS UNLESS SPECIFICALLY DETAILED OTHERWISE IN THE STRUCTURAL DOCUMENTS. SEE MECHANICAL AND ELECTRICAL DRAWINGS FOR LOCATION OF SLEEVES, ACCESSORIES, ETC.

4. REFER TO ARCHITECTURAL DRAWINGS FOR MOLDS, GROOVES, ORNAMENTS, CLIPS OR GROUNDS REQUIRED TO BE ENCASED IN CONCRETE AND FOR LOCATION OF FLOOR FINISHES AND SLAB DEPRESSIONS.

5. CONSTRUCTION JOINT LOCATIONS SHALL BE APPROVED BY THE DESIGN PROFESSIONAL. NO HORIZONTAL CONSTRUCTION JOINTS ARE PERMITTED EXCEPT THOSE SHOWN ON THE STRUCTURAL DRAWINGS.

6. DEFECTIVE AREAS IN CONCRETE INCLUDING, BUT NOT LIMITED TO, HONEY-COMBING, SPALLS, AND CRACKS WITH WIDTHS EXCEEDING 0.016 INCH SHALL BE REPAIRED. EXTENT OF DEFECTIVE AREA TO BE DETERMINED BY THE DESIGN PROFESSIONAL.

CONCRETE MASONRY

1. MINIMUM 28-DAY COMPRESSIVE STRENGTH OF CONCRETE MASONRY SHALL BE F'M = 1500 PSI.

2. MORTAR SHALL COMPLY WITH THE BUILDING CODE REQUIREMENTS FOR CONCRETE MASONRY AND SHALL BE OF THE FOLLOWING TYPE:

   - WALLS BELOW GRADE TYPE M
   - BEARING WALLS TYPE M OR S

3. CONCRETE MASONRY UNITS SHALL BE GROUTED WITH 2500 PSI COARSE GROUT AS SHOWN IN THE STRUCTURAL DOCUMENTS. GROUT FOR REINFORCED AND NONREINFORCED MASONRY SHALL CONFORM TO ASTM C476.

4. PROVIDE HORIZONTAL JOINT REINFORCEMENT WITH NO. 9 GAGE LONGITUDINAL WIRES AT 16" C/C VERTICALLY, UNLESS NOTED OTHERWISE. PROVIDE SPECIAL ACCESSORIES FOR CORNERS, INTERSECTIONS, ETC.

5. PROVIDE OPEN BOTTOM BEAM BLOCK UNITS WITH 3" DEEP MINIMUM WEB OPENINGS AT HORIZONTAL REINFORCEMENT LOCATIONS. A MINIMUM CLEAR SPACE OF ONE BAR DIAMETER SHALL BE PROVIDED BETWEEN THE REINFORCING BARS AND THE FACE OF MASONRY UNITS.

6. PROVIDE U-SHAPED BLOCK UNITS AT LINTELS OVER OPENINGS. SEE DETAILS FOR LOCATION OF REINFORCEMENT.

7. PROVIDE CONTROL JOINTS IN ALL CONCRETE MASONRY WALLS AT LOCATIONS APPROVED BY THE DESIGN PROFESSIONAL AT A MAXIMUM SPACING OF 3 TIMES THE WALL HEIGHT OR 40'-0", WHICHEVER IS LESS.

8. PROVIDE DOVETAIL ANCHORS AT 16" C/C, UNLESS NOTED OTHERWISE, WHERE MASONRY WALLS ABUT CONCRETE SURFACES.

9. SUBMIT WRITTEN CONSTRUCTION PROCEDURES PRIOR TO THE START OF MASONRY CONSTRUCTION.

Menefee Architecture | Architecture Planning Design
1075 Brady Ave NW Atlanta GA 30318 | t 404.876.1011

COPYRIGHT

This drawing and all reproductions are copyrighted and the property of Menefee Architecture LLC and may not be used in any way without their permission.

COPYRIGHT 2018

ROME TENNIS - INDOOR COURTS
Rome, Georgia

DRAWN BY	CHECKED BY
MAC	JLM

DATE
2019-02-15

REVISIONS	
NUMBER	DATE

TITL
GENERAL NOTES

PROJECT
201811

SHEET
S002

75% CONSTRUCTION DOCUMENTS 2/15/2019

PRE-ENGINEERED METAL BUILDING

1. DESIGN OF THE PRE-ENGINEERED METAL BUILDING AND THEIR CONNECTIONS SHALL BE THE SOLE RESPONSIBILITY OF THE CONTRACTOR. SUBMIT SHOP DRAWINGS, CALCULATIONS, DESIGN LOAD DATA, AND SUPPORT REACTIONS OF THE COMPONENTS SEALED BY AN ENGINEER LICENSED IN THE PROJECT STATE. PRE-ENGINEERED BUILDING MANUFACTURE SHALL BE RESPONSIBLE FOR THE DESIGN OF THE SUPER-STRUCTURE, ROOF, DECK, FASCIAS, ANCHOR BOLT DESIGN AND LAYOUT, BRACING, LATERAL ANALYSIS AND ALL RELATED WORK. REVIEW SHALL BE FOR CONFORMANCE WITH THE CONTRACT DOCUMENTS REGARDING ARRANGEMENT AND SIZE OF THE MEMBERS AND THE CONTRACTORS INTERPRETATION OF THE DESIGN LOADS AND CONTRACT DOCUMENT DETAILS. SUCH REVIEW SHALL NOT RELIEVE THE CONTRACTOR OF THE FULL RESPONSIBILITY FOR THE DESIGN OF THE BUILDING COMPONENTS NOT SPECIFIED IN THE CONTRACT DOCUMENTS. SEE ARCHITECTURAL DRAWINGS FOR GENERAL ARRANGMENTS OF BUILDING COMPONENTS.

2. DESIGN LOADS:

   2.1 PRE-ENGINEERED METAL BUILDING SHALL BE CAPABLE OF SUPPORTING THE SUPERIMPOSED LOADS AS GIVEN IN THE CONTRACT DOCUMENTS, IN ADDITION TO THE SELF-WEIGHT OF THE STRUCTURE.

   2.2 PROVIDE LOCATION OF ALL BRACED FRAMES USED TO RESIST LATERAL LOADS IN THE OPPOSITE DIRECTION THE BENTS ARE SPANNING. SEE PLAN FOR PROPOSED LOCATIONS.

   2.3 STEEL PURLIN TYPE AND SPACING AND STEEL DECK SELECTION SHALL BE THE OPTION OF THE PEMB MANUFACTURER WITH APPROVAL OF ENGINEER/ARCHITECT. MAXIMUM SPACING OF PURLINS = 5'-0". MAX DEFLECTION = L/240. STANDING SEAM DECK IS NOT TO BE USED FOR PURLIN BRACING.

   2.4 PEMB MANUFACTURER SHALL DESIGN AND SUPPLY ALL REQUIRED SUB-FRAMING FOR OPENINGS, INCLUDING FRAMING TO SUPPORT THE WEIGHT OF MECHANICAL EQUIPMENT AND ALL WINDOW OPENINGS.

   2.5 REFER TO MECHANICAL DRAWINGS FOR ROOF SUPPORTED EQUIPMENT AND PROVIDE SUPPORT FOR ADDITIONAL LOAD AS REQUIRED. SHOW UNIT LOCATIONS ON SHOP DRAWINGS.

   2.6 MAX HORIZONTAL DEFLECTION OF WALL GIRTS = L/240.

   2.7 LATERAL DRIFT AT EAVE = H/240 IN MOMENT FRAME DIRECTION, H/500 IN BRACED FRAME DIRECTION TO SUPPORT CMU END WALL. PEMB MAY USE A 10-YEAR WIND LOAD. PROVIDE HORIZONTAL SLIP CONNECTIONS TO CMU WALL TO PREVENT USING THE WALL AS A SHEAR WALL.

   2.8 EFFECTS TO BE CONSIDERED BY THE PRE-ENGINEERED BUILDING ENGINEER IN THE DESIGN OF THE STEEL ELEMENTS AND CONNECTIONS INCLUDE, BUT ARE NOT LIMITED TO, THE FOLLOWING:

   - GRAVITY — DEAD, LIVE, SNOW, SUPERIMPOSED DEAD, ETC.
   - WIND
   - SEISMIC
   - ECCENTRICITY OF APPLIED LOADS
   - EQUIPMENT LOADS
   - VOLUMETRIC CHANGES DUE TO TEMPERATURE, CREEP, & SHRINKAGE
   - ERECTION LOADS

   LOAD COMBINATIONS SHALL BE IN ACCORDANCE WITH THE BUILDING CODE.

3. CONNECTIONS:

   3.1 CONNECTION CONCEPTS ONLY ARE SHOWN IN SECTIONS AND DETAILS OF THE CONTRACT DOCUMENT. THE DESIGN AND FREQUENCY OF CONNECTIONS SHALL BE THE RESPONSIBILITY OF THE CONTRACTOR'S DESIGN ENGINEER IN ACCORDANCE WITH THE BUILDING DESIGN ITSELF. SHOP DRAWINGS SHALL ADEQUATELY DEPICT THE BUILDING ATTACHMENTS TO STRUCTURAL COMPONENTS.

   3.2 SUBMIT SERVICE LOAD REACTIONS ON THE DRAWINGS OF ALL METAL BUILDING ELEMENTS SUPPORTED BY STRUCTURAL ELEMENTS.

   3.3 PRE-ENGINEERED BUILDING MANUFACTURER SHALL SUPPLY BOLT LAYOUT, NUMBER AND SIZE OF ANCHOR BOLTS PRIOR TO FABRICATION OF STEEL. CONTRACTOR SHALL INSTALL. THE COLUMNS SHALL BE DESIGNED AS PINNED AT THE BASE.

4. FOUNDATION SIZES SHOWN ARE PRELIMINARY. CONTRACTOR SHALL NOT SUBMIT FOUNDATION SHOP DRAWINGS PRIOR TO THE REVIEW OF THE PRE-ENGINEERED METAL BUILDING REACTIONS BY THE DESIGN TEAM.

STEEL HELICAL SCREW PILE

1. PIERS SHALL BE INSTALLED BY AN AUTHORIZED CONTRACTOR WHO HAS SATISFIED THE CERTIFICATION REQUIREMENTS RELATING TO THE TECHNICAL ASPECTS OF THE PRODUCT AND THE ASCRIBED INSTALLATION TECHNIQUES. PROOF OF CURRENT CERTIFICATION BY SUPPLIER MUST BE PROVIDED.

2. ALL WORK AS DESCRIBED HEREIN SHALL BE PERFORMED IN ACCORDANCE WITH ALL APPLICABLE SAFETY CODES IN EFFECT AT THE TIME OF INSTALLATION.

3. HELICAL PIERS AS SPECIFIED SHALL CONFORM TO THE INTERNATIONAL BUILDING CODE. AN OFFICIAL EVALUATION REPORT WITH ASSIGNED NUMBER SHALL BE PRESENTED UPON REQUEST TO THE OWNER AND/OR THEIR REPRESENTATIVE.

4. THE HELICAL LEAD SECTIONS AND EXTENSION SECTIONS SHALL BE SOLID STEEL, ROUND CORNERED SQUARE SHAFT, OR ROUND STEEL PIPE SHAFT, OR COMPOSITE STEEL AND GROUT SHAFT CONFIGURED WITH ONE OR MORE HELICAL BEARING PLATES WELDED TO THE SHAFT.

5. ALL PIERS MUST BE CORROSION PROTECTED BY HOT DIP GALVANIZATION.

6. INSTALLATION UNITS SHALL CONSIST OF A ROTARY TYPE TORQUE MOTOR WITH FORWARD AND REVERSE CAPABILITIES. THESE UNITS ARE TYPICALLY POWERED.

7. INSTALLATION UNITS SHALL BE CAPABLE OF DEVELOPING THE MINIMUM TORQUE AS REQUIRED.

8. INSTLALLATION UNITS SHALL BE CAPABLE OF POSITIONING THE HELICAL PIER AT THE PROPER INSTALLATION ANGLE. THIS ANGLE MAY VARY BETWEEN VERTICAL AND 5 DEGREES DEPENDING UPON APPLICATION AND TYPE OF LOAD TRANSFER DEVICE SPECIFIED OR REQUIRED.

9. INSTALLATION TORQUE SHALL BE MONITORED THROUGHOUT THE INSTALLATION PROCESS.

10. HELICAL PIERS SHALL BE INSTALLED TO THE MINIMUM TORQUE VALUE REQUIRED TO PROVIDE 25 KIPS ALLOWABLE COMPRESSION AND 20 KIPS TENSION LOAD CAPACITY.

11. THE APPROPRIATE STEEL NEW CONSTRUCTION LOAD TRANSFER DEVICE SHALL BE USED.

12. APPROPRIATE HELICAL PIER SELECTION WILL CONSIDER DESIGN LOAD PLUS SAFETY FACTOR, SOIL PARAMETERS AND THE INSTALLATION TORQUE VS. CAPACITY EQUATION AS PER THE MANUFACTURER'S RECOMMENDATIONS.

13. DESIGN OF HELICAL SCREW PILES AND ANCHORS SHALL BE PERFORMED BY AN ENTITY AS REQUIRED IN ACCORDANCE WITH STATE OF GEORGIA CODE REQUIREMENTS. THIS DESIGN WORK SHALL BE PERFORMED AND SEALED BY A LICENSED PROFESSIONAL ENGINEER IN THE STATE OF GEORGIA.

Menefee Architecture | Architecture Planning Design
1075 Brady Ave NW Atlanta GA 30318 | t 404.876.1011

COPYRIGHT

This drawing and all reproductions are copyrighted and the property of Menefee Architecture LLC and may not be used in any way without their permission.

COPYRIGHT 2018

ROME TENNIS - INDOOR COURTS
Rome, Georgia

DRAWN BY	CHECKED BY
MAC	JLM

DATE
2019-02-15

REVISIONS	
NUMBER	DATE

TITL
GENERAL NOTES

PROJECT
201811

SHEET
S003

75% CONSTRUCTION DOCUMENTS 2/15/2019

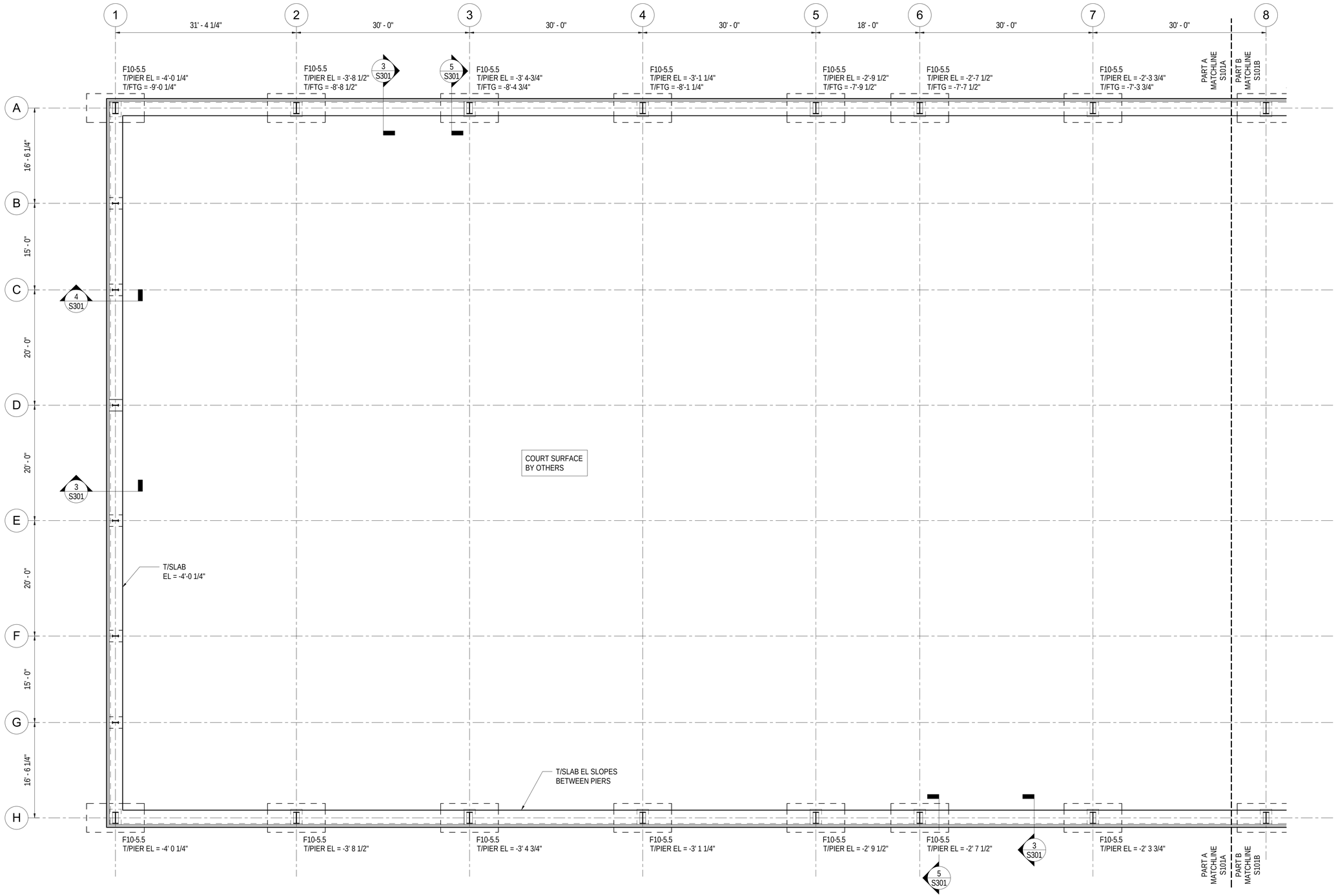

SHEET SPECIFIC NOTES:

1. T/SLAB EL = 0'-0" (REFERENCE ELEVATION XXX'-XX").
2. T/FTG EL = -2'-0" BELOW T/PIER, TYP UNO.
   ALL NOTED FOUNDATION ELEVATIONS ARE WITH RESPECT TO THE REFERENCE ELEVATION.
3. FDN CENTERED ON COL GRID LINES UNO.
4. SEE ARCH DWGS FOR DIMENSIONS NOT INDICATED.
5. COORDINATE EDGE OF SLAB W/ ARCH AND CIVIL DWGS.
6. FOUNDATIONS SHOWN ARE PRELIMINARY. DESIGN MAY CHANGE BASED ON GEOTECH AND PEMB FOUNDATION LOADS

SHEET GENERAL NOTES:

A. SEE 4/S301 FOR FOOTING SCHEDULE.
B. SEE 7/S301 FOR PIER SCHEDULE.
C. SEE 13/S301 FOR TYPICAL CMU WALL JOINTS.

17
1/8" = 1'-0"

FOUNDATION PLAN - PART A

Menefee Architecture | Architecture Planning Design
1075 Brady Ave NW Atlanta GA 30318 | t 404.876.1011

COPYRIGHT

This drawing and all reproductions are copyrighted and the property of Menefee Architecture LLC and may not be used in any way without their permission.

COPYRIGHT 2018

ROME TENNIS - INDOOR COURTS
Rome, Georgia

DRAWN BY	CHECKED BY
SEH	JLM

DATE
2019-02-15

REVISIONS	
NUMBER	DATE

TITL
FOUNDATION PLAN - PART A

PROJECT
201811

SHEET
S101A

75% CONSTRUCTION DOCUMENTS 2/15/2019

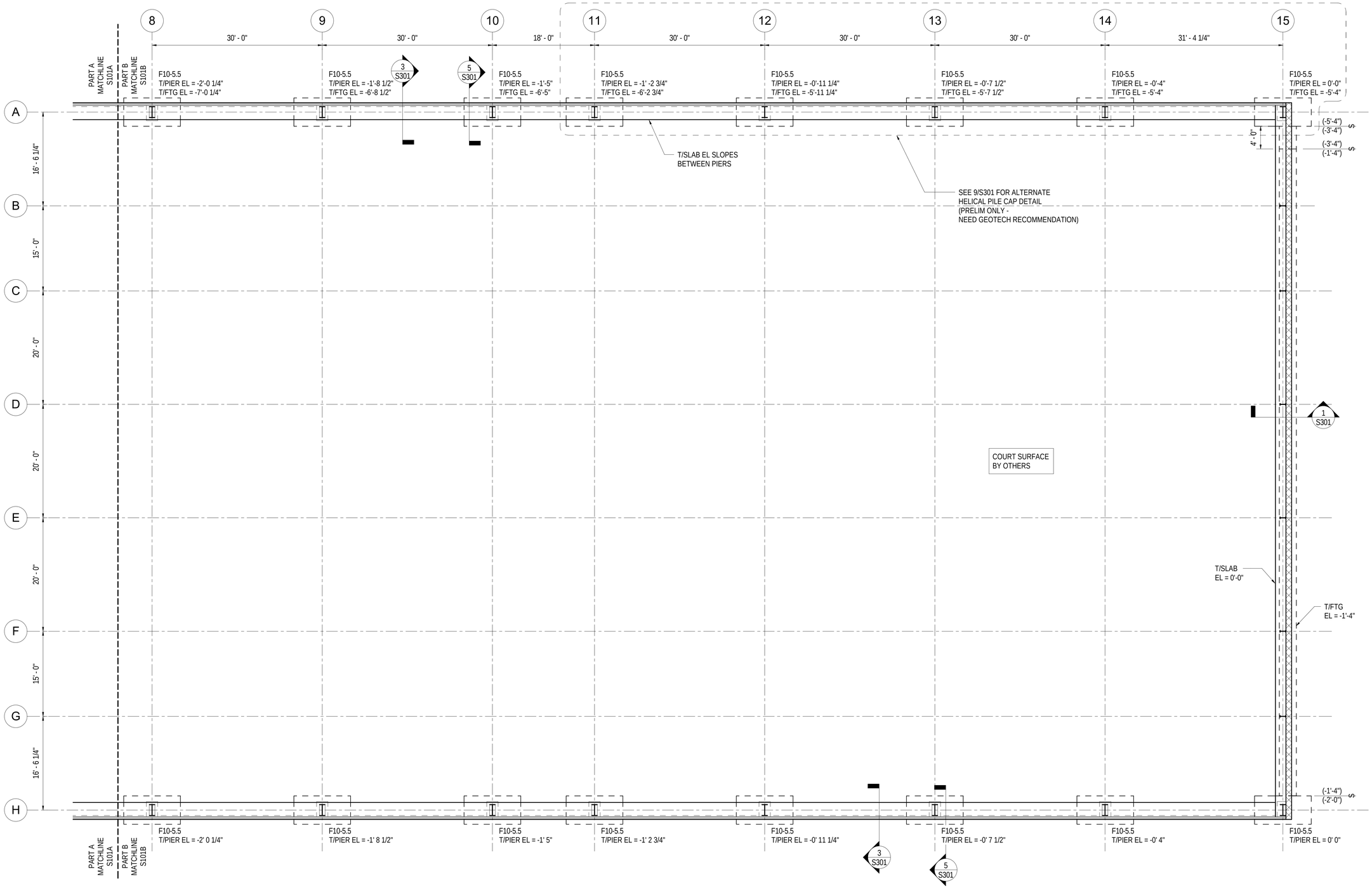

SHEET SPECIFIC NOTES:

1. T/SLAB EL = 0'-0" (HIGH POINT).
2. T/FTG EL = -2'-0" BELOW T/PIER, TYP UNO.
   ALL NOTED FOUNDATION ELEVATIONS ARE WITH RESPECT TO THE REFERENCE ELEVATION.
3. FDN CENTERED ON COL GRID LINES UNO.
4. SEE ARCH DWGS FOR DIMENSIONS NOT INDICATED.
5. COORDINATE EDGE OF SLAB W/ ARCH AND CIVIL DWGS.
6. FOUNDATIONS SHOWN ARE PRELIMINARY. DESIGN MAY CHANGE BASED ON GEOTECH AND PEMB FOUNDATION LOADS

SHEET GENERAL NOTES:

A. SEE 4/S301 FOR FOOTING SCHEDULE.
B. SEE 7/S301 FOR PIER SCHEDULE.
C. SEE 13/S301 FOR TYPICAL CMU WALL JOINTS.

17
1/8" = 1'-0"

FOUNDATION PLAN - PART B

Menefee Architecture | Architecture Planning Design
1075 Brady Ave NW Atlanta GA 30318 | t 404.876.1011

COPYRIGHT

This drawing and all reproductions are copyrighted and the property of Menefee Architecture LLC and may not be used in any way without their permission.

COPYRIGHT 2018

ROME TENNIS - INDOOR COURTS

Rome, Georgia

DRAWN BY	CHECKED BY
MAC	JLM

DATE
2019-02-15

REVISIONS	
NUMBER	DATE

TITL
FOUNDATION PLAN - PART B

PROJECT
201811

SHEET
S101B

75% CONSTRUCTION DOCUMENTS 2/15/2019

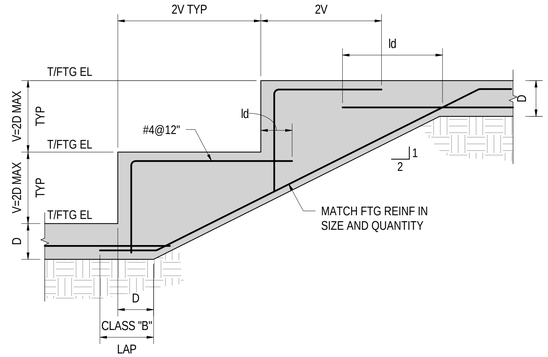

16 NTS TYPICAL STEPPED FOOTING

FOOTING SCHEDULE			
MARK	SIZE (WxLxT)	REINF	REMARKS
F10-5.5	10'-0"x5'-6"x2'-0"	#7@12"	EW, T&B

8 NTS FOOTING SCHEDULE

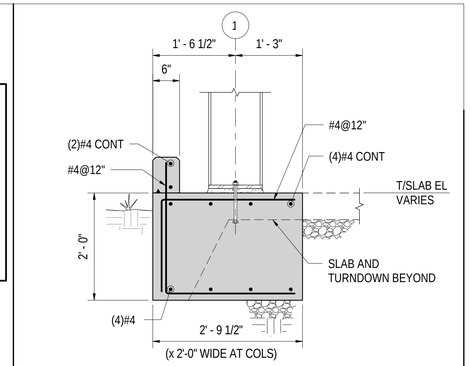

4 NTS SECTION

* MASONRY LAP SCHEDULE
#3=18" #4=24"
#5=30" #6=43"

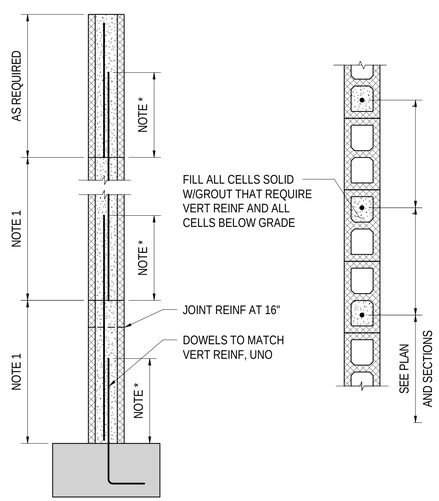

NOTES:
1. USE 4-0 LIFTS FOR BAR SIZES #3 THROUGH #6
   USE 6-0 LIFTS FOR BAR SIZES #7 AND ABOVE
2. FOR FOOTING AND ADDITIONAL REINFORCING, REFER TO PLANS AND SECTIONS

14 NTS TYPICAL REINFORCED CMU WALL

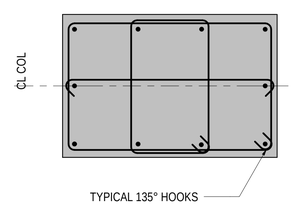

11 NTS TYPICAL PIER TIES

PILASTER / PIER SCHEDULE				
MARK	SIZE (WxD)	REINFORCEMENT		REMARKS
		VERTICAL	TIES	
P1	24"x34 3/4"	10#7	#3@10"	SEE 11/S301

7 NTS PIER SCHEDULE

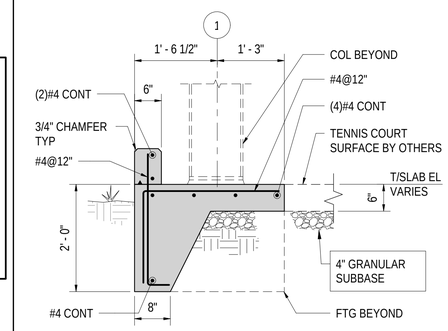

3 NTS SECTION

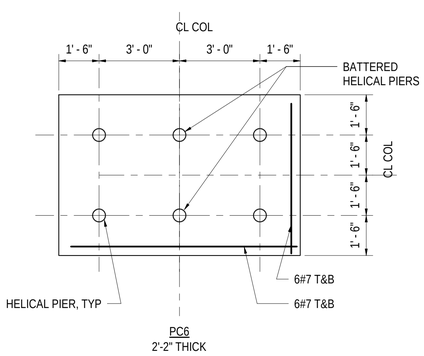

17 NTS TYPICAL HELICAL PIER CAP

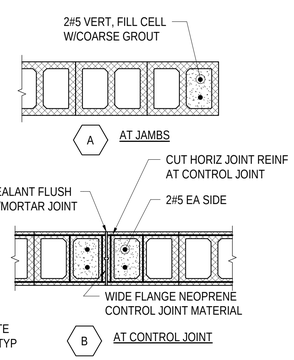

13 NTS TYPICAL REINFORCING AT 12" CMU WALL

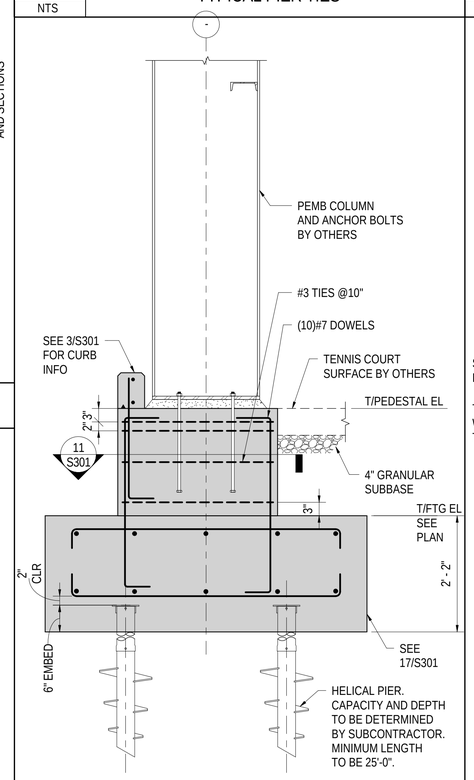

9 NTS TYPICAL COLUMN AT PILE CAP

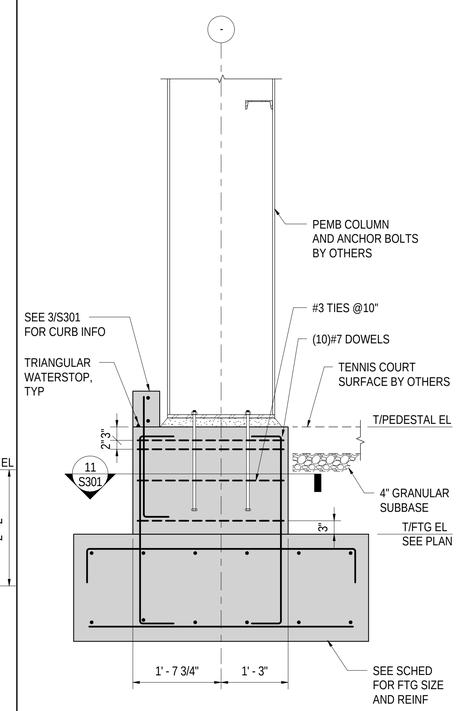

5 NTS TYPICAL COLUMN FOOTING

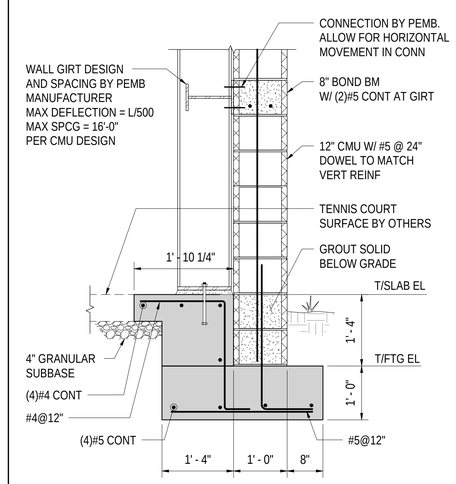

1 NTS SECTION

Menefee Architecture | Architecture Planning Design
1075 Brady Ave NW Atlanta GA 30318 | t 404.876.1011

COPYRIGHT

This drawing and all reproductions are copyrighted and the property of Menefee Architecture LLC and may not be used in any way without their permission.

COPYRIGHT 2018

ROME TENNIS - INDOOR COURTS
Rome, Georgia

DRAWN BY	CHECKED BY
MAC	JLM

DATE
2019-02-15

REVISIONS	
NUMBER	DATE

TITL
SECTIONS AND DETAILS

PROJECT
201811

SHEET
S301

75% CONSTRUCTION DOCUMENTS 2/15/2019

PANEL TYPES

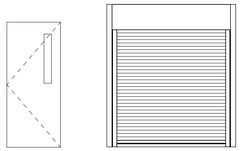

F OHCD

FRAME TYPES

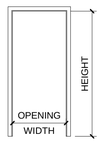

00

DOOR SCHEDULE

Door Number	DOOR Door Type	MATL	Width	Height	Thickness	FRAME Frame Type	MATL	HEAD	JAMB	HDWR SET	Door Number	Comments
100	F	HM	3'-6"	7'-0"	1 3/4"	00	HM				100	
101	FF	HM	7'-0"	7'-0"	1 3/4"	00	HM				101	
102	FF	HM	7'-0"	7'-0"	1 3/4"	00	HM				102	
103	F	HM	3'-6"	7'-0"	1 3/4"	00	HM				103	
104	OHCD	MTL	10'-0"	10'-0"	2"	--	STL				104	
105	F	HM	3'-6"	7'-0"	1 3/4"	00	HM				105	
106	FF	HM	7'-0"	7'-0"	1 3/4"	00	HM				106	ADA OPERATOR
107	FF	HM	7'-0"	7'-0"	1 3/4"	00	HM				107	ADA OPERATOR
109	F	HM	3'-6"	7'-0"	1 3/4"	00	HM				109	CARD READER

1. PROVIDE WIREGLASS AT DOOR VISION LITES.

2. DOORS AND HARDWARE ARE AS SPECIFIED. COORDINATE HEAD AND JAMB DETAILS PER MANUFACTURER'S STANDARD DETAILS FOR FRAMED OPENINGS AND PROVIDE MANUFACTURER'S TYPICAL CLOSURE TRIM AND FLASHING ACCESSORIES.

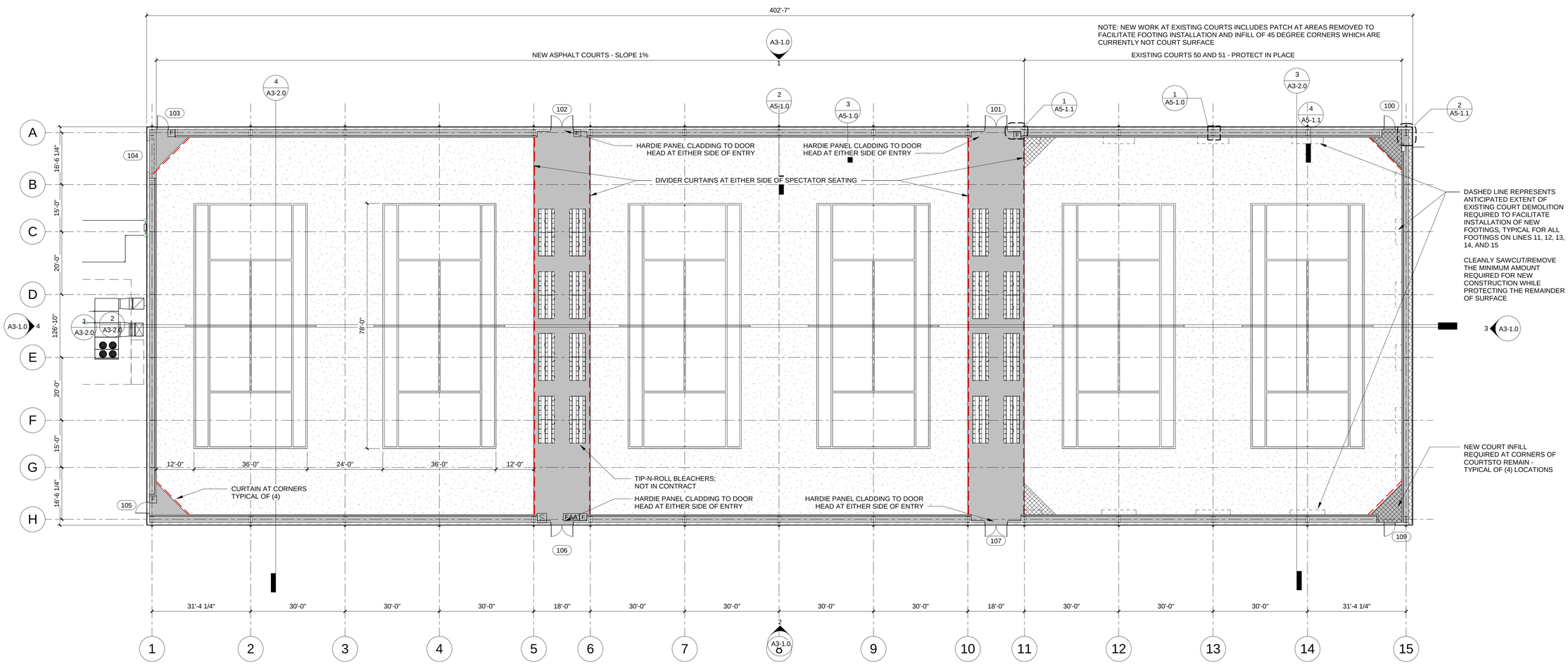

1 FLOOR PLAN - OVERALL BUILDING
1/16" = 1'-0"

Menefee Architecture | Architecture Planning Design
1075 Brady Ave NW Atlanta GA 30318 | t 404.876.1011

COPYRIGHT

This drawing and all reproductions are copyrighted and the property of Menefee Architecture LLC and may not be used in any way without their permission.

COPYRIGHT 2018

ROME TENNIS - INDOOR COURTS

Rome, Georgia

DRAWN BY	CHECKED BY
JTG/JLG	TM

DATE
2019-02-15

REVISIONS	
NUMBER	DATE

TITLE
FLOOR PLAN

PROJECT NUMBER
201811

SHEET NUMBER
A2-1.0

75% CONSTRUCTION DOCUMENTS 2 / 15 / 2019

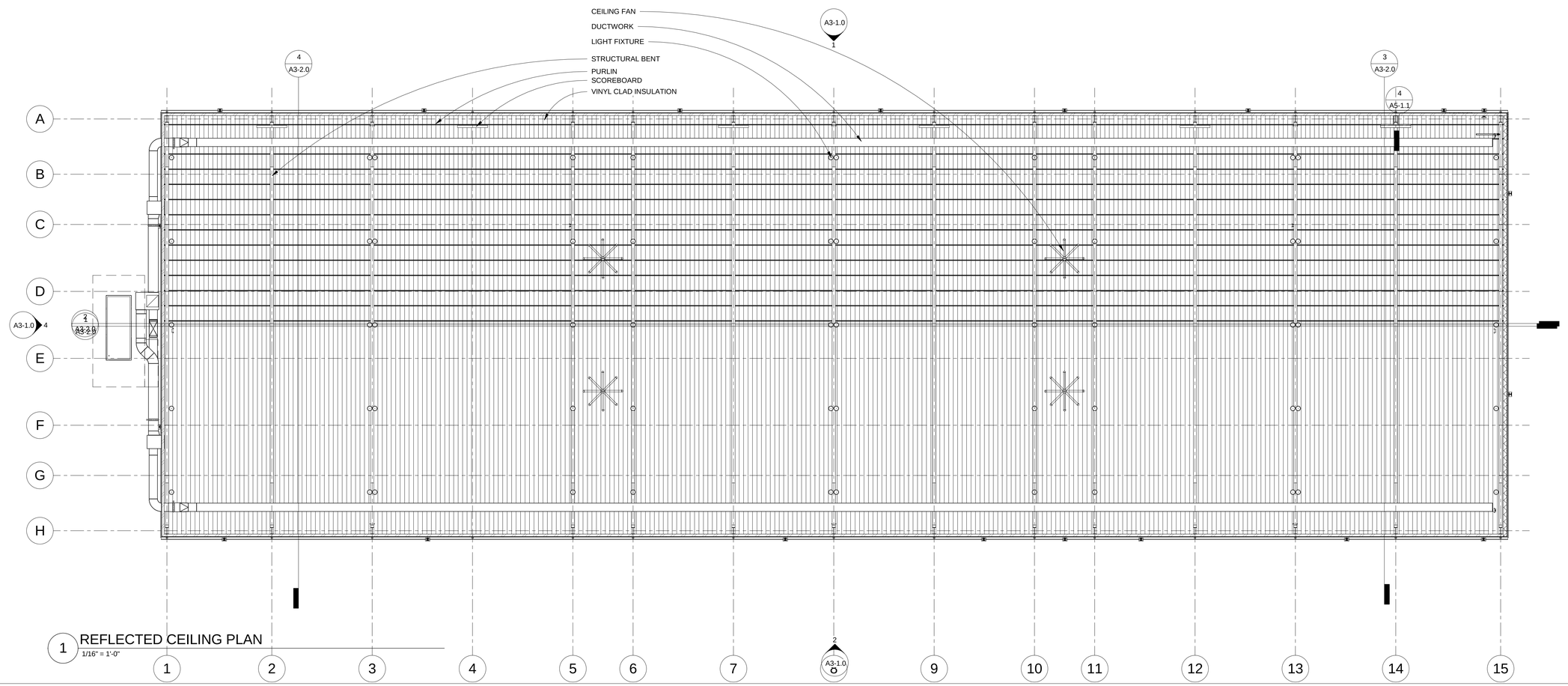

1 REFLECTED CEILING PLAN
1/16" = 1'-0"

Menefee Architecture | Architecture Planning Design
1075 Brady Ave NW Atlanta GA 30318 | t 404.876.1011

COPYRIGHT

This drawing and all reproductions are copyrighted and the property of Menefee Architecture LLC and may not be used in any way without their permission.

COPYRIGHT 2018

ROME TENNIS - INDOOR COURTS

Rome, Georgia

DRAWN BY	CHECKED BY
JTG/JLG	TM

DATE
2019-02-15

REVISIONS	
NUMBER	DATE

TITLE
REFLECTED CEILING PLAN

PROJECT NUMBER
201811

SHEET NUMBER
A2-1.R

75% CONSTRUCTION DOCUMENTS 2 / 15 / 2019

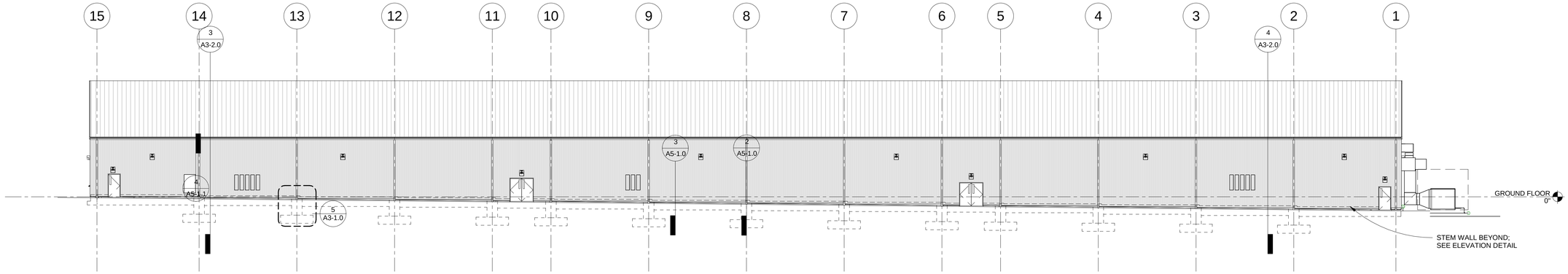

1 NORTH ELEVATION
1/16" = 1'-0"

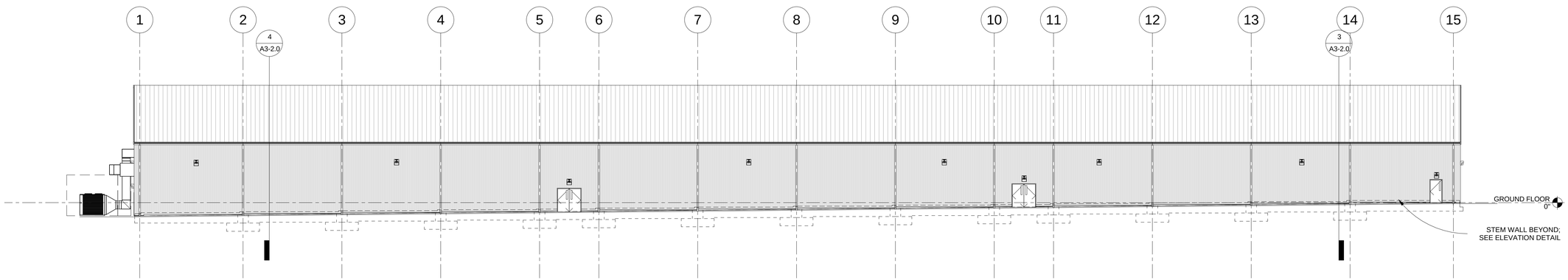

2 SOUTH ELEVATION
1/16" = 1'-0"

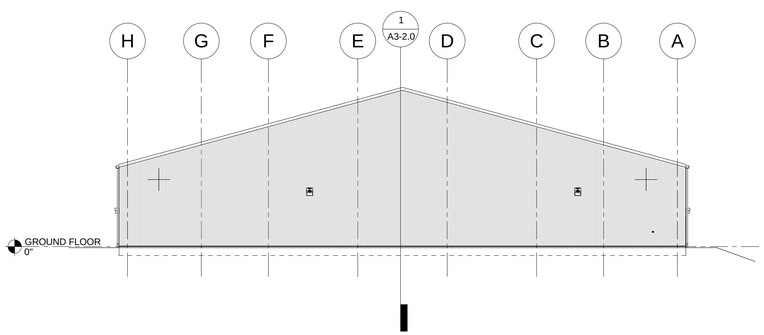

3 EAST ELEVATION
1/16" = 1'-0"

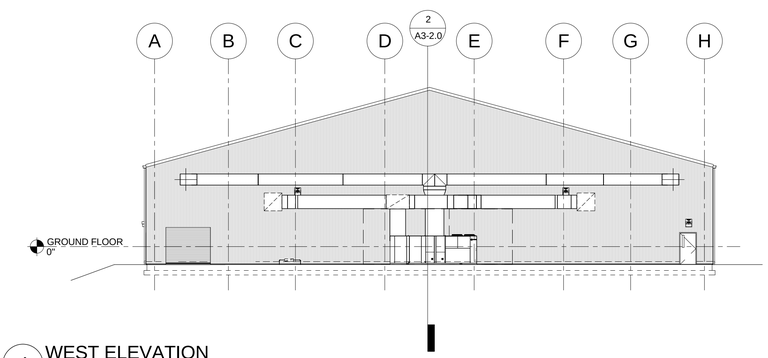

4 WEST ELEVATION
1/16" = 1'-0"

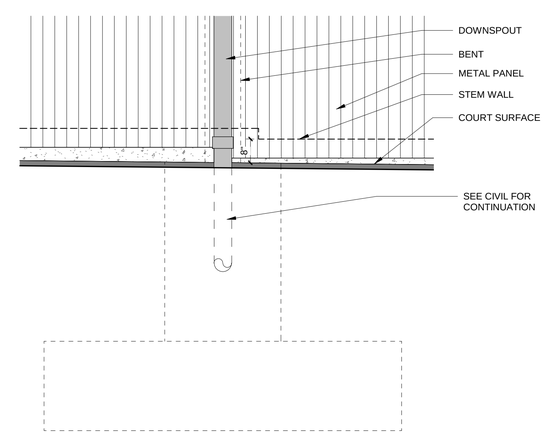

5 ELEVATION DETAIL
1/2" = 1'-0"

Menefee Architecture | Architecture Planning Design
1075 Brady Ave NW Atlanta GA 30318 | t 404.876.1011

COPYRIGHT

This drawing and all reproductions are copyrighted and the property of Menefee Architecture LLC and may not be used in any way without their permission.

COPYRIGHT 2018

ROME TENNIS - INDOOR COURTS

Rome, Georgia

DRAWN BY	CHECKED BY
JTG/JLG	TM

DATE
2019-02-15

REVISIONS	
NUMBER	DATE

TITLE
EXTERIOR ELEVATIONS

PROJECT NUMBER
201811

SHEET NUMBER
A3-1.0

75% CONSTRUCTION DOCUMENTS 2 / 15 / 2019

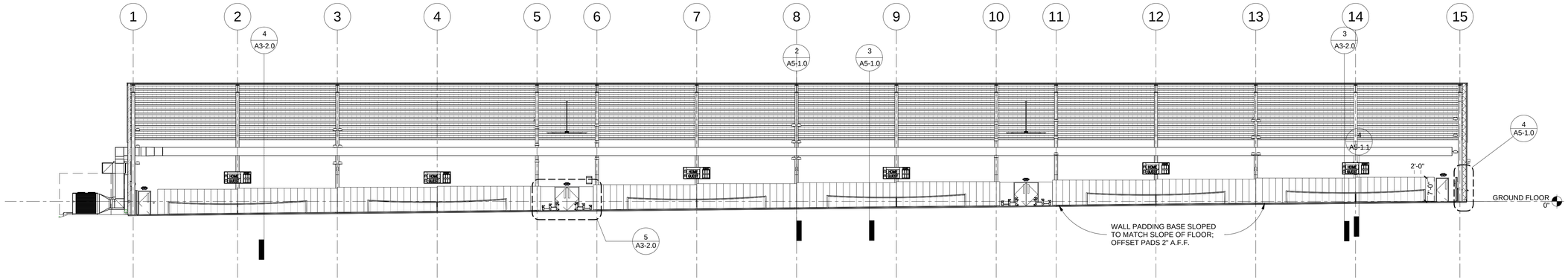

1 LONGITUDINAL SECTION LOOKING NORTH
1/16" = 1'-0"

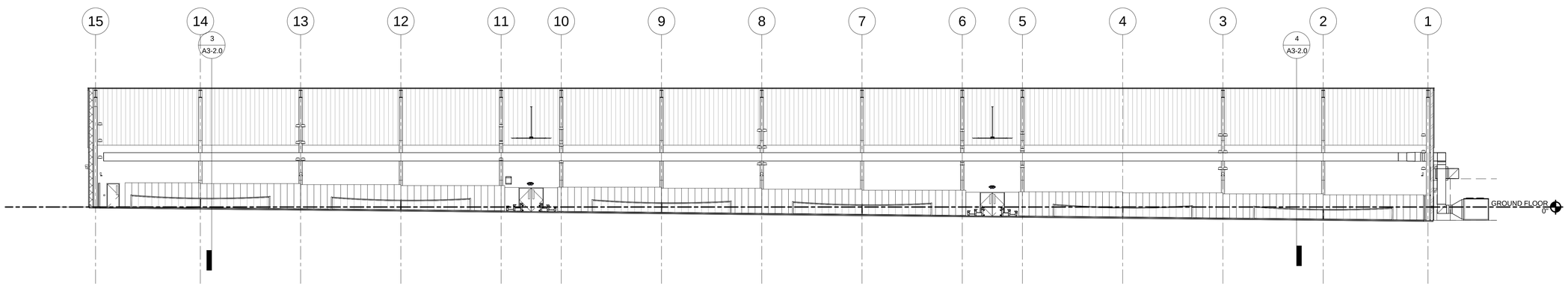

2 LONGITUDINAL SECTION LOOKING SOUTH
1/16" = 1'-0"

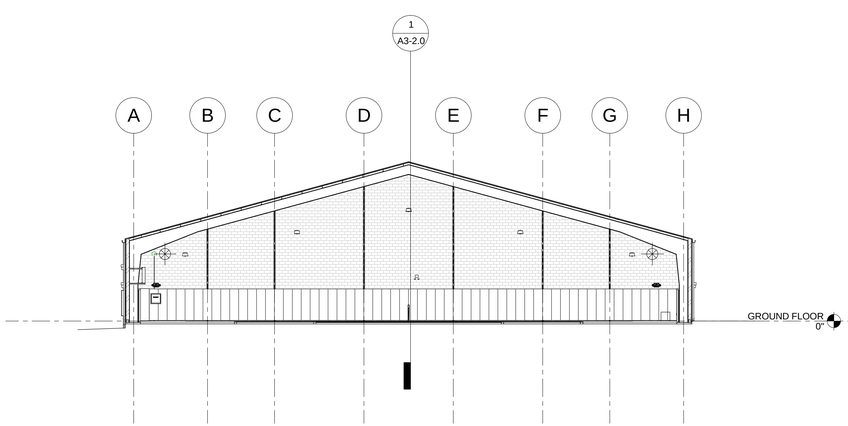

3 TRANSVERSE SECTION LOOKING EAST
1/16" = 1'-0"

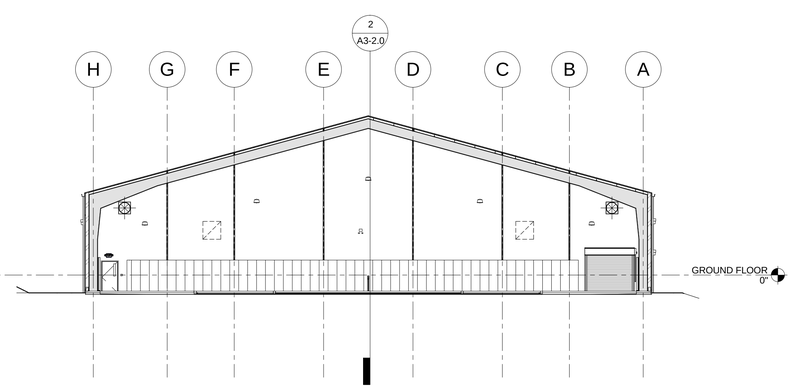

4 TRANSVERSE SECTION LOOKING WEST
1/16" = 1'-0"

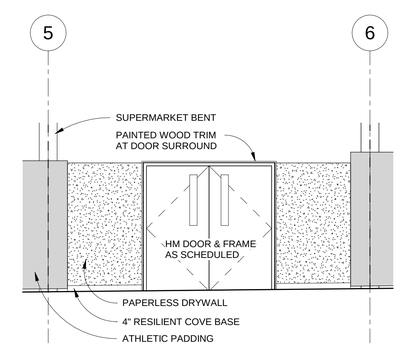

5 ELEVATION AT DOUBLE DOORS
1/4" = 1'-0"

Menefee Architecture | Architecture Planning Design
1075 Brady Ave NW Atlanta GA 30318 | t 404.876.1011

COPYRIGHT

This drawing and all reproductions are copyrighted and the property of Menefee Architecture LLC and may not be used in any way without their permission.

COPYRIGHT 2018

ROME TENNIS - INDOOR COURTS

Rome, Georgia

DRAWN BY	CHECKED BY
JLG/JTG	TM

DATE
2019-02-15

REVISIONS	
NUMBER	DATE

TITLE
OVERALL SECTIONS & ELEVATIONS

PROJECT NUMBER
201811

SHEET NUMBER
A3-2.0

75% CONSTRUCTION DOCUMENTS 2 / 15 / 2019

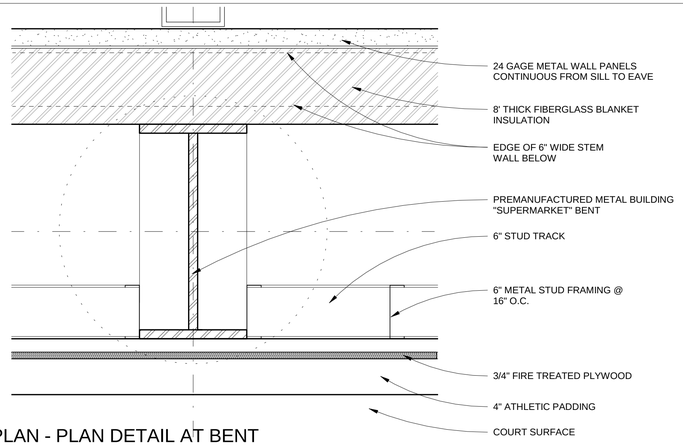

1 FLOOR PLAN - PLAN DETAIL AT BENT
1 1/2" = 1'-0"

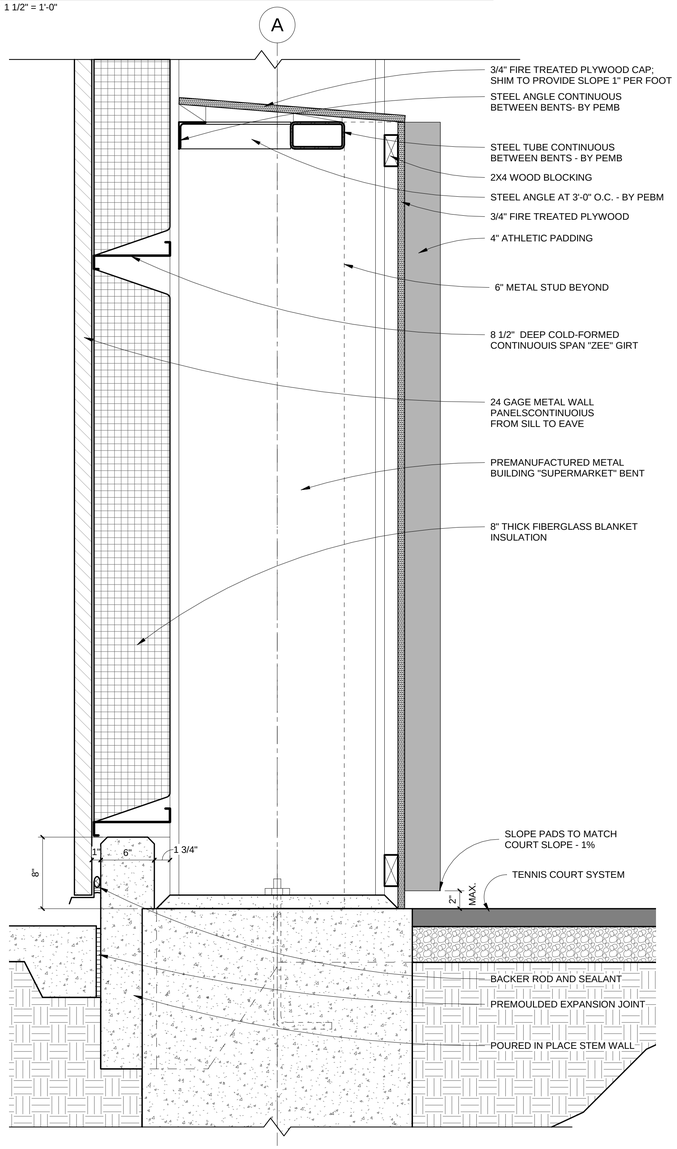

2 TRANSVERSE SECTION AT BENT
1 1/2" = 1'-0"

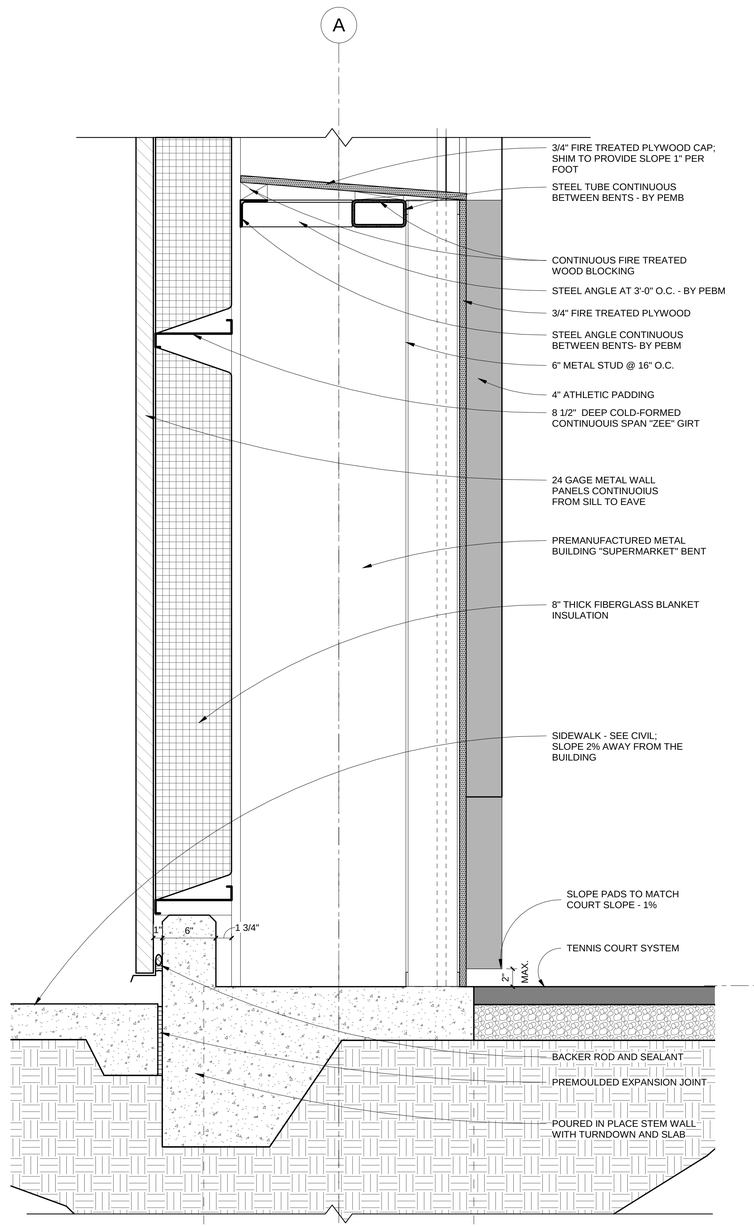

3 TRANSVERSE SECTION BETWEEN BENTS
1 1/2" = 1'-0"

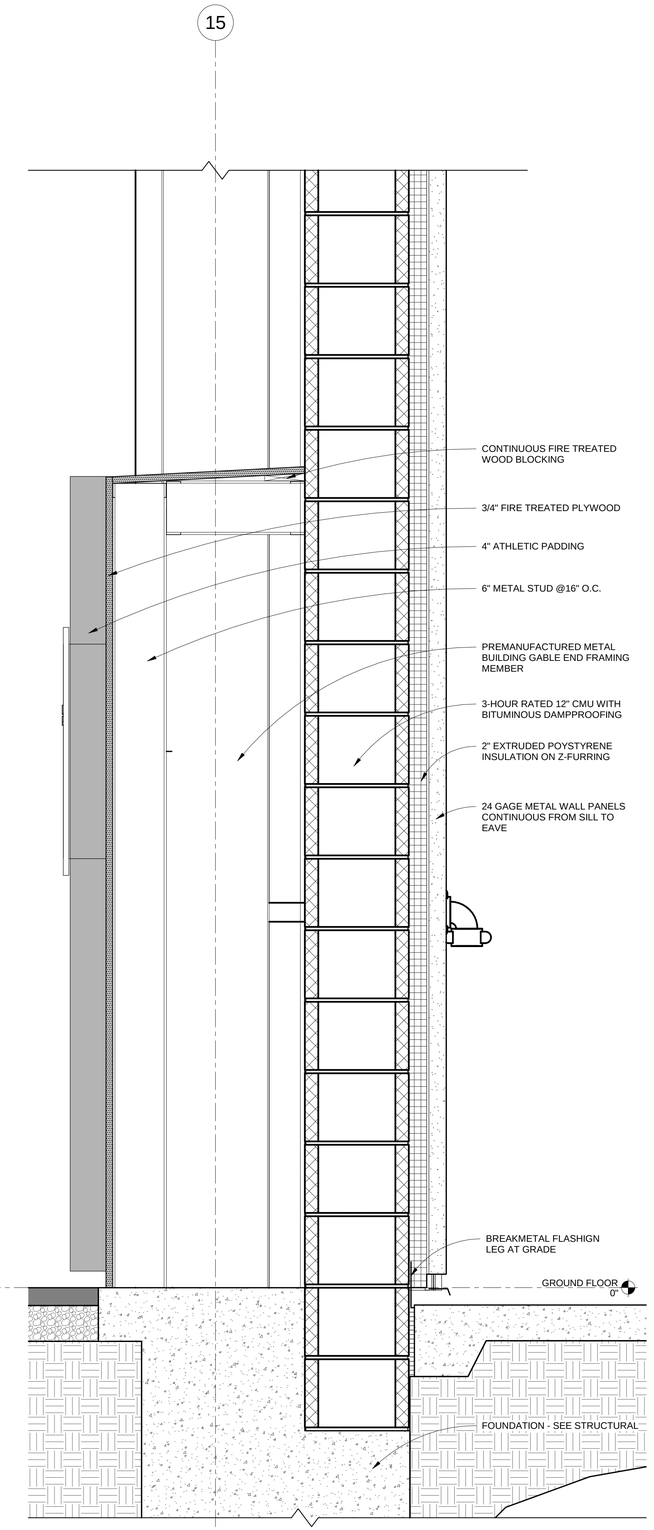

4 SECTION AT EAST GABLE END WALL
1 1/2" = 1'-0"

Menefee Architecture | Architecture Planning Design
1075 Brady Ave NW Atlanta GA 30318 | t 404.876.1011

COPYRIGHT

This drawing and all reproductions are copyrighted and the property of Menefee Architecture LLC and may not be used in any way without their permission.

COPYRIGHT 2018

ROME TENNIS - INDOOR COURTS

Rome, Georgia

DRAWN BY	CHECKED BY
JTG	TM

DATE
2019-02-15

REVISIONS	
NUMBER	DATE

TITLE
TYPICAL DETAILS

PROJECT NUMBER
201811

SHEET NUMBER
A5-1.0

75% CONSTRUCTION DOCUMENTS 2 / 15 / 2019

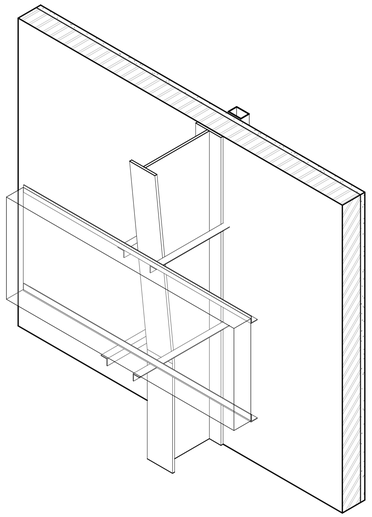

3 SCOREBOARD SUPPORT AXON

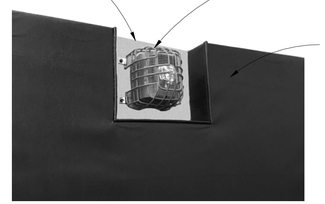

5 RECESS ATHLETIC PADDING

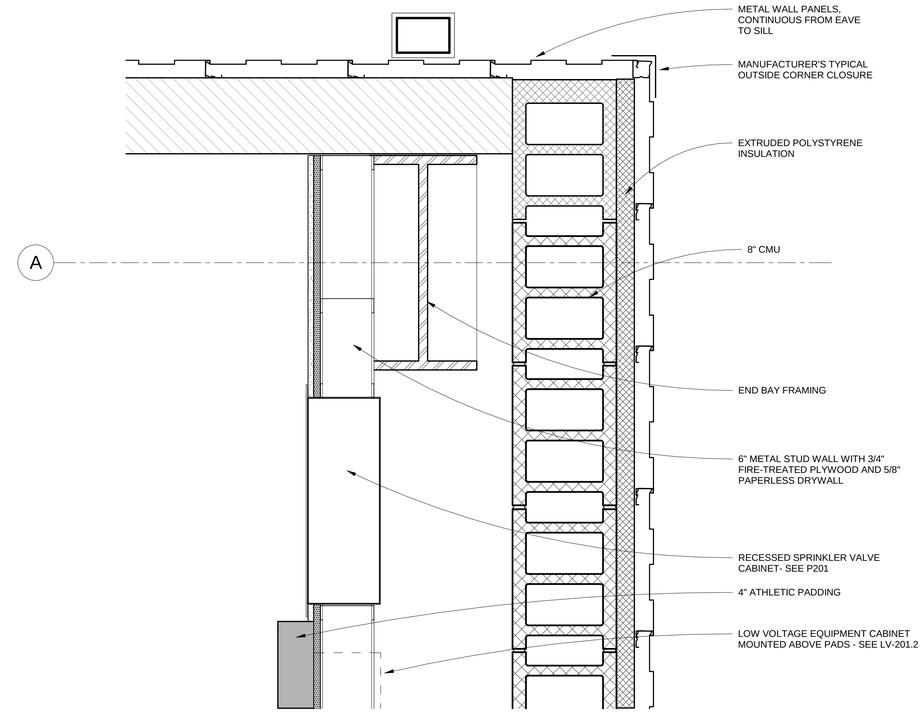

2 PLAN DETAIL AT CORNER
1 1/2" = 1'-0"

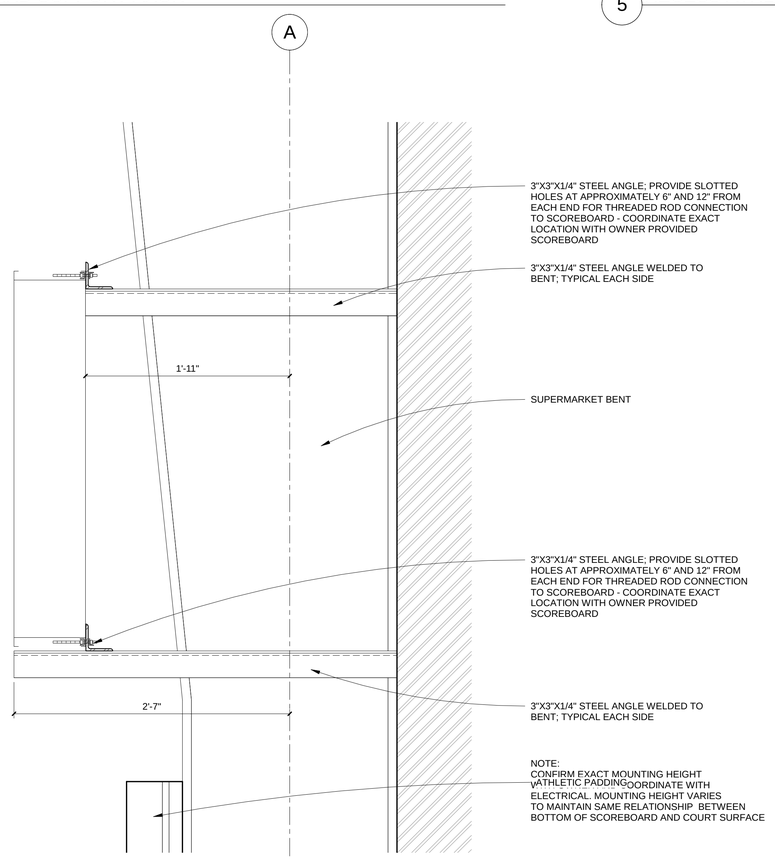

4 SCOREBOARD SUPPORT DETAIL
1 1/2" = 1'-0"

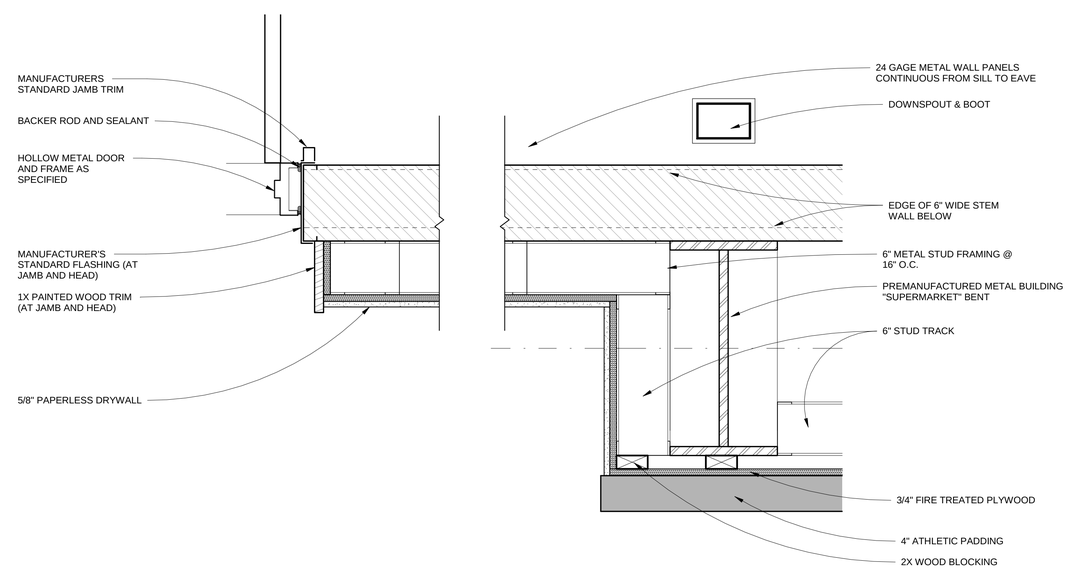

1 PLAN DETAIL AT PAD CORNER
1 1/2" = 1'-0"

Menefee Architecture | Architecture Planning Design
1075 Brady Ave NW Atlanta GA 30318 | t 404.876.1011

COPYRIGHT

This drawing and all reproductions are copyrighted and the property of Menefee Architecture LLC and may not be used in any way without their permission.

COPYRIGHT 2018

ROME TENNIS - INDOOR COURTS

Rome, Georgia

DRAWN BY	CHECKED BY
Author	Checker

DATE
2019-02-15

REVISIONS	
NUMBER	DATE

TITLE
TYPICAL DETAILS

PROJECT NUMBER
201811

SHEET NUMBER
A5-1.1

75% CONSTRUCTION DOCUMENTS 2 / 15 / 2019

GROUND MOUNTED ROOF TOP UNIT SCHEDULE

MARK	RTU TYPE	SERVES	UNIT						SUPPLY FAN		COOLING COIL (DX)		GAS HEAT CAPACITY	ELECTRICAL	DESIGN BASIS	REMARKS
			NOMINAL TONS	MAX CFM	MIN CFM	MIN OUTSIDE AIR CFM	EAT DB/WB	LAT DB/WB	ESP	HP	CAPACITY (MBH) TOTAL/SENS.	STAGES				
GRTU-1	GROUND ROOF TOP UNIT	INDOOR TENNIS COURTS	50	17,000	-	3,500	79°F/66.0°F	55°F/54.5°F	1.5	20	539/398	5	800 MBH	460V/3PH/6Hz	TRANE YCH600	1, 2, 3, 4, 5, 6, 7

REMARKS:
1. OUTSIDE AIR CONDITIONS: SUMMER = 95°F DB/74°F WB, WINTER = 10°F DB.
   INSIDE DESIGN CONDITIONS: SUMMER = 75°F DB/62.5°F WB, WINTER = 70°F DB.
2. HORIZONTAL SUPPLY AND HORIZONTAL RETURN.
3. FILTERS: 2"MERV 8, THROW AWAY FILTERS
4. MODULATING HOT GAS REHEAT COIL.
5. DX COOLING R-410A REFRIGERANT.
6. PROVIDE VARIABLE FREQUENCY DRIVE (VFD) FOR SUPPLY FAN MOTOR.
7. PROVIDE POWER EXHAUST AND ECONOMIZER.

CEILING FAN SCHEDULE

MARK	TYPE	SERVES	IMPELLER DIA	MAX AFFECTED AREA	MOTOR	FAN RPM	ELECTRICAL	DESIGN BASIS	REMARKS
CF-1	CEILING FAN	SPECTATOR AREA (WEST)	12 FT.	14,500FT²	500 WATT	119	208v/1ø	BIG ASS FAN ESSENCE	1, 2, 3, 4
CF-2	CEILING FAN	SPECTATOR AREA (WEST)	12 FT.	14,500FT²	500 WATT	119	208v/1ø	BIG ASS FAN ESSENCE	1, 2, 3, 4
CF-3	CEILING FAN	SPECTATOR AREA (EAST)	12 FT.	14,500FT²	500 WATT	119	208v/1ø	BIG ASS FAN ESSENCE	1, 2, 3, 4
CF-4	CEILING FAN	SPECTATOR AREA (EAST)	12 FT.	14,500FT²	500 WATT	119	208v/1ø	BIG ASS FAN ESSENCE	1, 2, 3, 4

REMARKS:
1. HEAVY DUTY STEEL FRAME WITH PROTECTIVE FINISH.
2. EXTRUDED ALUMINIA AIRFOILS WITH PROTECTIVE FINISH.
3. HIGH EFFICIENCY DIRECT DRIVE MOTOR.
4. WIRED WALL CONTROLLER SHALL BE INCLUDED BY MANUFACTURER.

GAS EQUIPMENT SCHEDULE

MARK	DESCRIPTION	CFH
GRTU-1	GROUND MOUNTED ROOF TOP UNIT	800

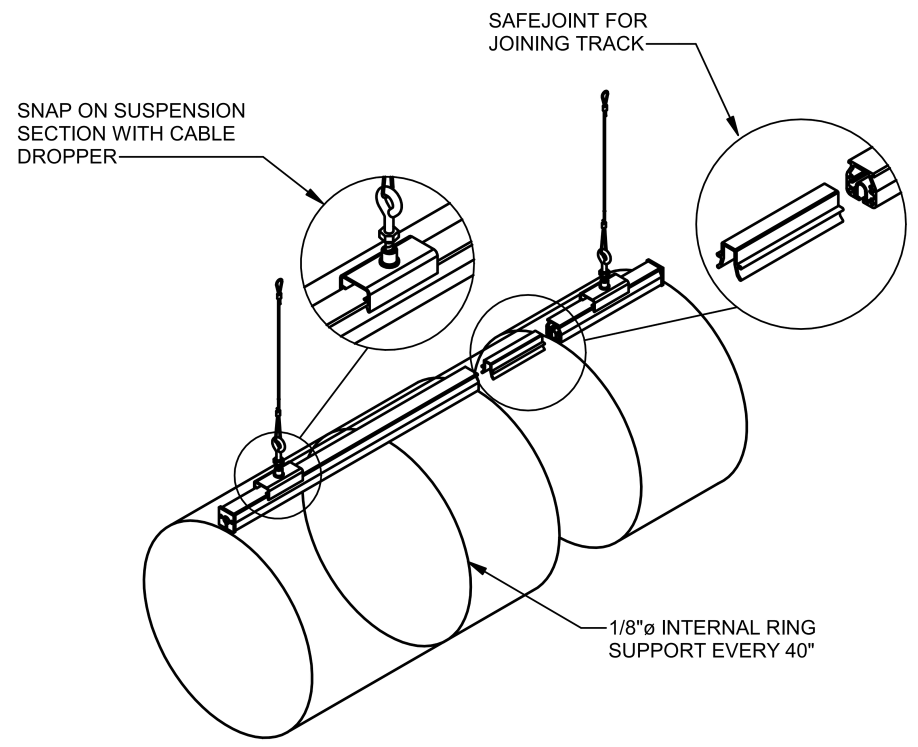

1 / M001 **FABRIC DUCTWORK SINGLE TRACK SUSPENSION DETAIL**
SCALE: 1/8" = 1'-0"

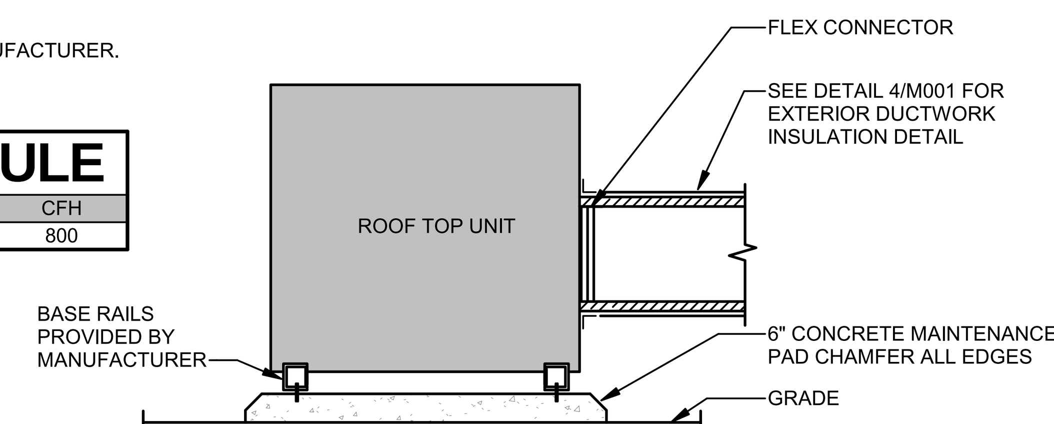

2 / M001 **GRADE-MOUNTED ROOFTOP UNIT INSTALLATION DETAIL**
SCALE: NO SCALE

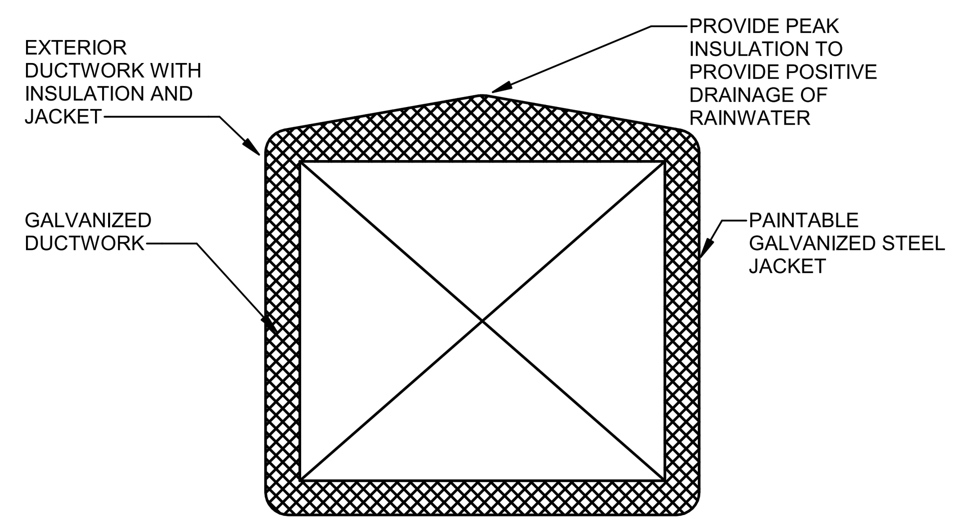

4 / M001 **EXTERIOR DUCTWORK INSULATION DETAIL**
SCALE: NO SCALE

NOTE:
EXTERIOR DUCTWORK SUPPORTS BY MECHANICAL CONTRACTOR.

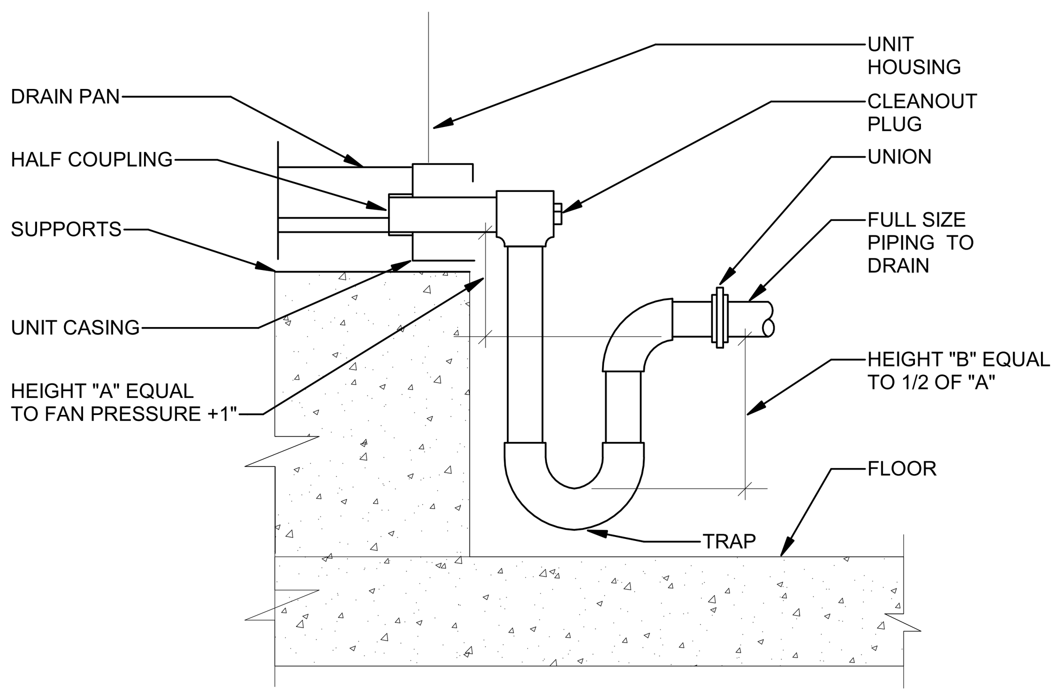

DRAW-THRU COIL

3 / M001 **CONDENSATE TRAP DETAIL**
SCALE: NO SCALE

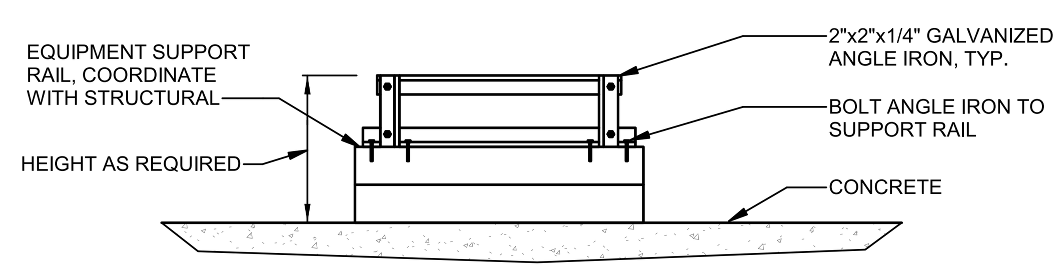

5 / M001 **DUCTWORK SUPPORT DETAIL**
SCALE: NO SCALE

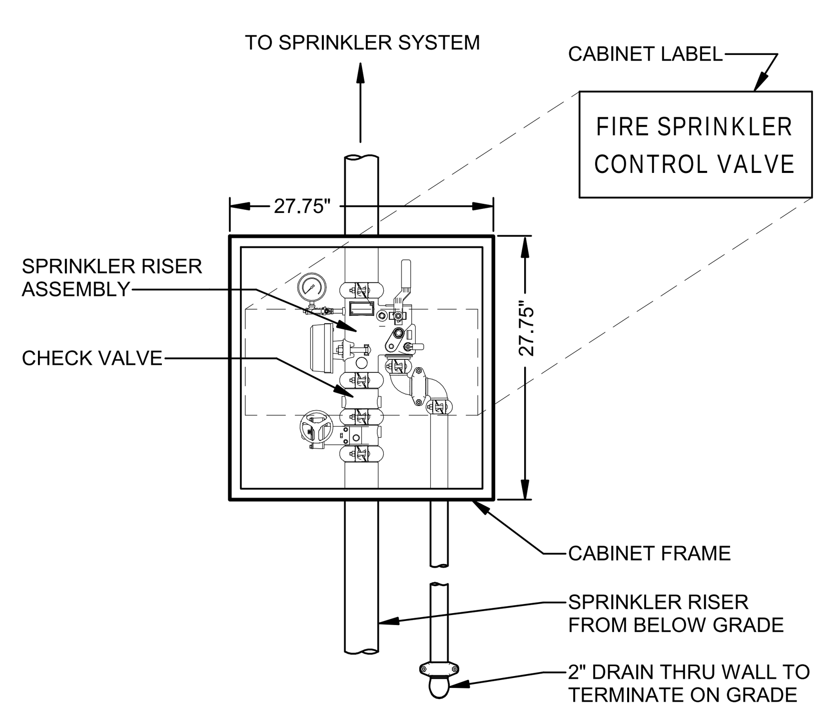

6 / M001 **SPRINKLER CONTROL VALVE CABINET**
SCALE: NO SCALE

NOTES:
1. LABEL LETTERING SHALL BE AT LEAST 1-1/2" HIGH.
2. CABINET SHALL BE RECESSED MOUNT TYPE.
3. CABINET DOOR SHALL BE ALUMINUM WITH WHITE POWDER COAT FINISH.
4. CABINET BASED ON POTTER ROEMER MODEL SVC1830 (24x24x10).

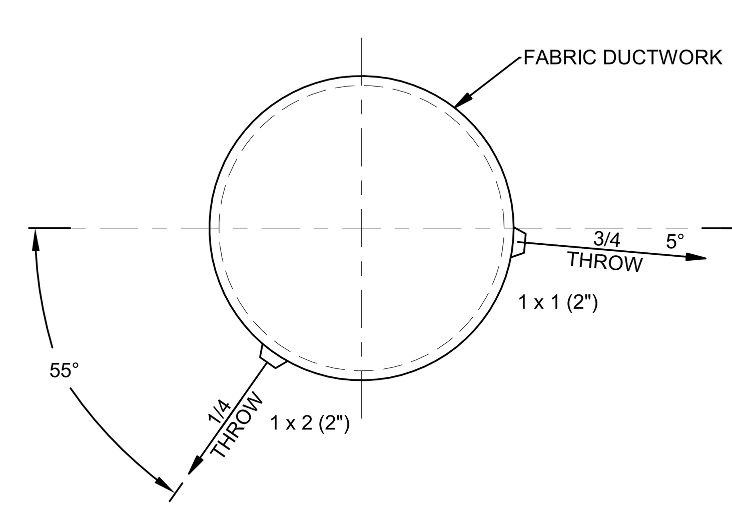

7 / M001 **NOZZLE DETAIL (NORTH SECTION)**
SCALE: NO SCALE

NOTES:
1 x 1 (2") = 1 ROW X 1 NOZZLE PER METER (2" NOZZLE OUTLET DIAMETER)
1 x 2 (2") = 1 ROW X 2 NOZZLES PER METER (2" NOZZLE OUTLET DIAMETER)

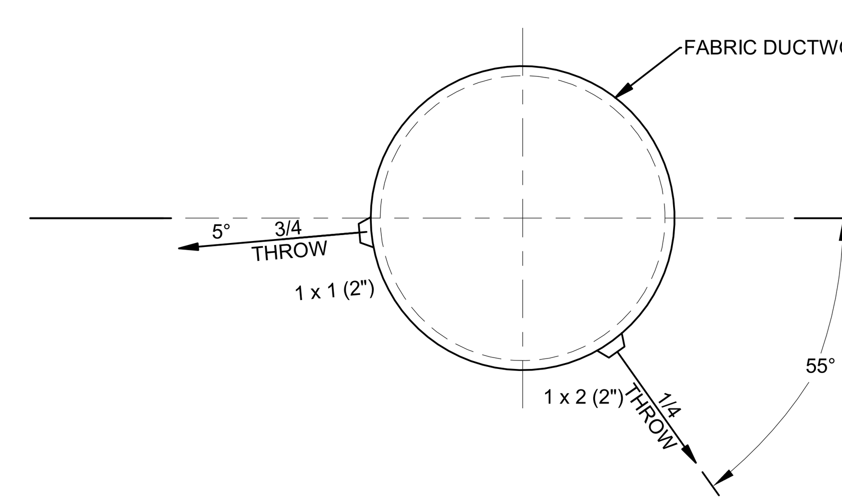

8 / M001 **NOZZLE DETAIL (SOUTH SECTION)**
SCALE: NO SCALE

NOTES:
1 x 1 (2") = 1 ROW X 1 NOZZLE PER METER (2" NOZZLE OUTLET DIAMETER)
1 x 2 (2") = 1 ROW X 2 NOZZLES PER METER (2" NOZZLE OUTLET DIAMETER)

HVAC - GENERAL NOTES

1. ALL MECHANICAL EQUIPMENT, PIPING, AND DUCTWORK SHOWN IS NEW UNLESS NOTED OTHERWISE.
2. PROTECT ALL MATERIALS AND EQUIPMENT FROM DAMAGE.
3. UNLESS OTHERWISE NOTED, WALL MOUNTED THERMOSTATS AND SENSORS SHALL BE MOUNTED AT 4'-0" AFF.
4. ALL EQUIPMENT SHALL BE INSTALLED IN ACCORDANCE WITH MANUFACTURER'S RECOMMENDATIONS AND INSTRUCTIONS.
5. COORDINATE ALL NEW EQUIPMENT, PIPING, AND DUCTWORK WITH FIRE PROTECTION, PLUMBING, ELECTRICAL DATA CABLES, AND LIGHTING FIXTURES.
6. BALANCE AIR DISTRIBUTION SYSTEMS AS NOTED.
7. CONTRACTOR SHALL PAINT ALL DUCTWORK VISIBLE THROUGH EXHAUST AIR OPENINGS BAKED OFF WHITE ENAMEL.

GENERAL NOTES - FIRE PROTECTION

1. ALL WORK SHALL COMPLY WITH NFPA AND LOCAL CODES
2. THIS CONSTRUCTION DOCUMENT REFLECTS NEW ARCHITECTURAL FLOOR PLANS. DO NOT ROUTE NEW PIPING UNDER HVAC UNITS OR WITHIN HVAC UNIT SERVICE ACCESS, COORDINATE WITH MECHANICAL CONTRACTOR FOR UNIT LOCATIONS PRIOR TO BEGINNING WORK.
3. THE CONTRACTOR SHALL FIELD VERIFY EXISTING CONDITIONS PRIOR TO BEGINNING WORK.
4. SLEEVE ALL PIPING THROUGH CONCRETE/BLOCK WALLS.
5. CAP ALL OPEN PIPING ENDS DURING CONSTRUCTION TO PREVENT ENTRY OF DEBRIS.
6. ALL PIPING SHALL BE PARALLEL TO WALLS AND CEILINGS.
7. SEE CIVIL DRAWINGS FOR CONNECTION BETWEEN PROJECT BUILDING AND WATER MAIN.
8. CONCEAL ALL PIPING IN FINISHED PORTIONS OF THE BUILDING UNLESS NOTED OTHERWISE.
9. DRAWINGS ARE DIAGRAMMATIC ONLY. REFER TO ARCHITECTURAL DRAWINGS FOR BUILDING DIMENSIONS AND EXACT LOCATIONS AND ELEVATIONS OF ALL FIXTURES AND EQUIPMENT.
10. VERIFY ALL EXISTING UTILITIES PRIOR TO BEGINNING WORK.
11. ALL EXPOSED GALVANIZED THREADS SHALL BE COATED WITH GALVANIC PAINT.
12. THESE DRAWINGS HAVE BEEN PREPARED FROM THE LATEST INFORMATION AVAILABLE, BUT VARIATIONS MAY OCCUR IN THE ACTUAL CONSTRUCTION. ANY DISCREPANCIES SHALL BE REPORTED TO THE ENGINEER PRIOR TO COMMENCING WORK EFFECTED.
13. PENETRATIONS OF RATED ASSEMBLIES SHALL BE FIRE STOPPED AS SPECIFIED.
14. WHERE PIPING VISIBLY PENETRATES THE WALLS, INSTALL ESCUTCHEONS TO COVER SLEEVES AND/OR CAULKING, THROUGHOUT FINISHED AREAS.
15. SPRINKLERS INSTALLED IN FINISHED CEILINGS SHALL BE SYMMETRICALLY ALIGNED.
16. SPRINKLERS INSTALLED IN AREAS WITH LAY-IN CEILINGS SHALL BE CENTERED IN TILES AND ASSOCIATED ESCUTCHEON MOUNTED FLUSH WITH CEILING.
17. PROVIDE ALL NECESSARY DRAINS AND PLUGS TO COMPLETELY DRAIN SYSTEM.
18. ALL SPRINKLER/STANDPIPE PIPING AND EQUIPMENT INSTALLED IN STAIRWELLS SHALL BE CLEANED AND PAINTED PRIOR TO TURNING BUILDING OVER TO OWNER.
19. SEAL ALL PIPING PENETRATIONS IN SMOKE PARTITIONS. SEE ARCHITECTURAL DRAWINGS FOR SMOKE PARTITION LOCATIONS.
20. ALL PIPING AND FITTINGS UPSTREAM OF PRESSURE REDUCING VALVES SHALL BE RATED FOR PRESSURES UP TO 300 PSI.
21. PROVIDE STANDARD COVERAGE CONCEALED SPRINKLERS IN ALL GYPSUM FINISHED CEILINGS AND IN DROP CEILINGS IF/AS NOTED ON THE ARCHITECTURAL REFLECTED CEILING PLAN(S).

HVAC LEGEND & ABBREVIATIONS

SYMBOL	DESCRIPTION
00x00	RECTANGULAR AIR DUCT - FIRST DIMENSION IS SIDE SHOWN
	ROUND DUCT (A"□) OR FLAT OVAL (AxB)
	LINED DUCTWORK, DIMENSIONS ARE OUTER METAL TO OUTER METAL
	AIR DUCT FLEXIBLE CONNECTOR
OR	SUPPLY OR OUTSIDE AIR RECTANGULAR DUCT RISE OR DROP
OR	RETURN AIR RECTANGULAR DUCT RISE OR DROP
OR	EXHAUST AIR RECTANGULAR DUCT RISE OR DROP
	45° BRANCH TAKE-OFF WITH SPLITTER DAMPER AND CONTROL ROD
M.D	SINGLE BLADE DAMPER
	DOUBLE ELBOW WITH SPLITTER DAMPER WITH CONTROL ROD
	DUCT-MOUNTED STATIC PRESSURE SENSOR
MD	MANUAL VOLUME DAMPER
SDT	SMOKE DETECTOR
	SQUARE ELBOW WITH TURNING VANES
	DUCT TRANSITION, RECTANGULAR TO ROUND OR OVAL
	DUCT TRANSITION, RECTANGULAR TO RECTANGULAR
	RADIUS ELBOW TAKE-OFF
OR	ECCENTRIC REDUCER FLAT SIDE ON BOTTOM OR FLAT SIDE ON TOP
	CONCENTRIC REDUCER
	PIPE UNION
	PIPE RISE
	PIPE DROP
	CAP ON END OF LINE
	GATE VALVE
	BUTTERFLY VALVE
	PIPING OR EQUIPMENT TO BE REMOVED
	PIPE FLOW ARROW
UP OR DN	GRADE ARROW-INDICATES RISE OR DROP IN DUCT OR PIPE
C	CONDENSATE DRAIN
(H)	HUMIDITY SENSOR
(T)	TEMPERATURE SENSOR
[T]	THERMOSTAT
(C)	CARBON DIOXIDE SENSOR
[S]	SWITCH
[TM]	TIMER
AFF	ABOVE FINISHED FLOOR
BOS	BOTTOM OF STRUCTURE
MOD	MOTOR OPERATED DAMPER

Johnson, Spellman & Associates, Inc.
CONSULTING ENGINEERS
350 Research Court, Suite 130
Peachtree Corners, GA 30092
770-447-4555 www.jsace.com

Menefee Architecture | Architecture Planning Design
1075 Brady Ave NW Atlanta GA 30318 | t 404.876.1011

COPYRIGHT
This drawing and all reproductions are copyrighted and the property of Menefee Architecture LLC and may not be used in any way without their permission.
COPYRIGHT 2018

ROME TENNIS INDOOR FACILITY
Rome, Georgia

DRAWN BY	CHECKED BY
SJM/SP	TLN

DATE
2019-02-15

REVISIONS	
NUMBER	DATE

TITL
LEGEND, SCHEDULES & GENERAL NOTES

PROJECT
201811

SHEET
M001

75% CONSTRUCTION DOCUMENTS 2/15/2019

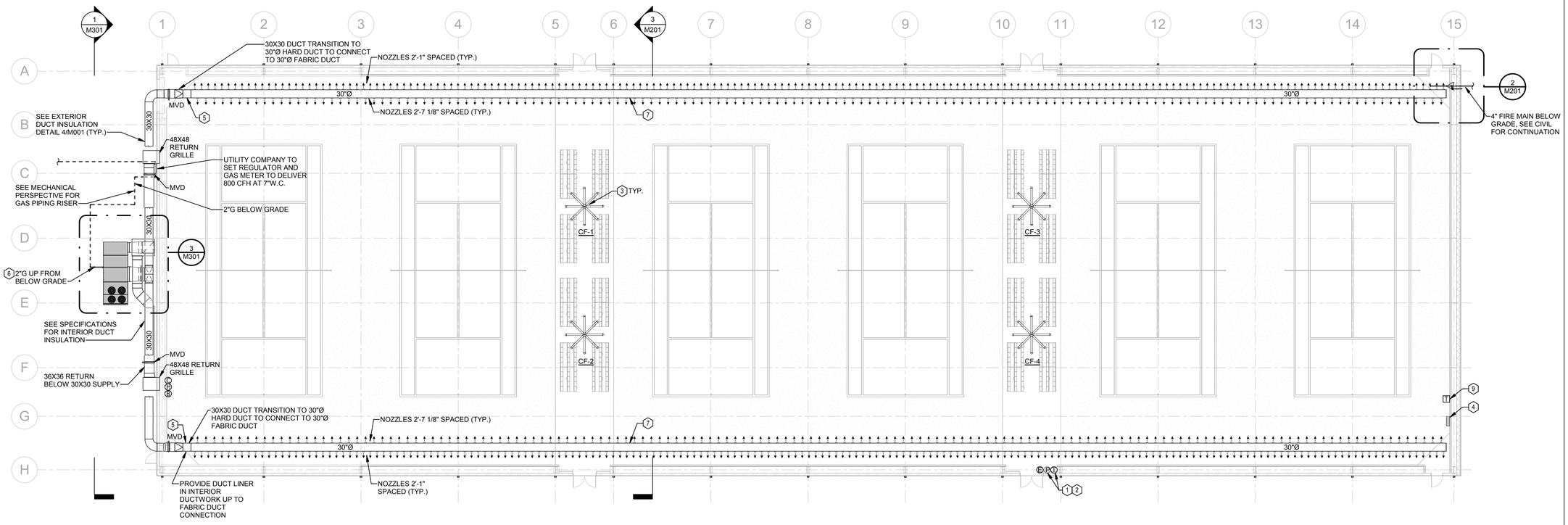

FIRST LEVEL MECHANICAL PLAN

1 M201 SCALE: 1/16" = 1'-0"

0 8 16 32 FT

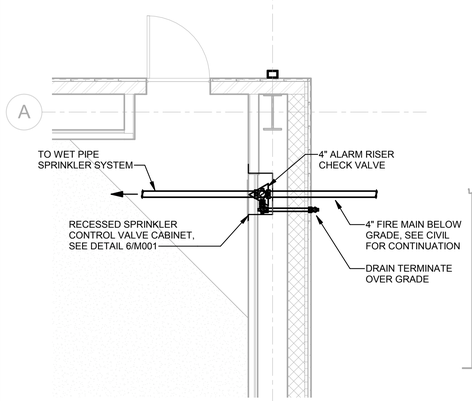

FIRE PROTECTION PART PLAN

2 M201 SCALE: 1/4" = 1'-0"

0 2 4 8 FT

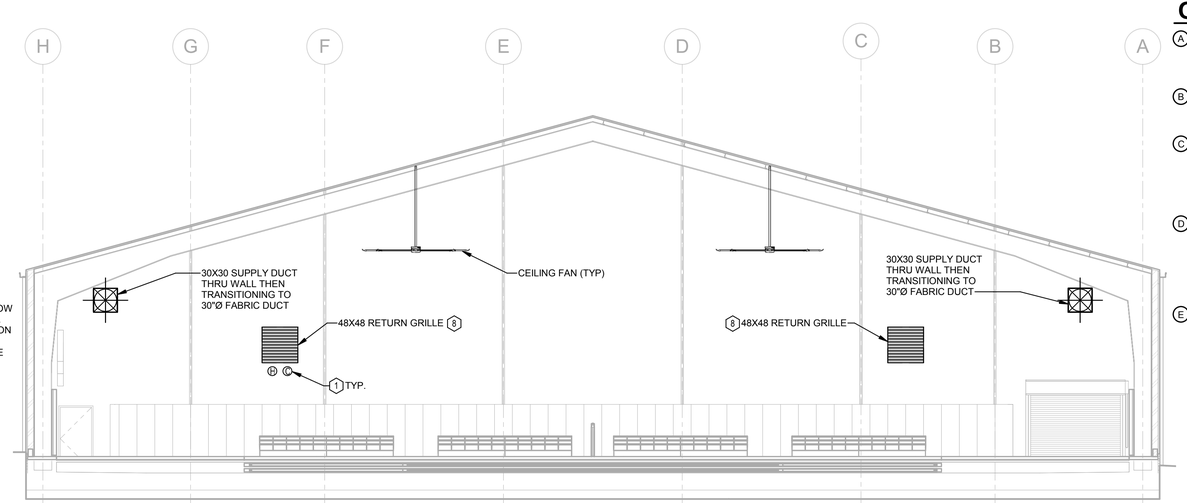

MECHANICAL ELEVATION PLAN

3 M201 SCALE: 1/8" = 1'-0"

0 4 8 16 FT

CONTROLS NOTES

A. THE RTU SHALL BE PROVIDED WITH INTEGRAL CONTROLS. ALL FIELD MOUNTED DEVICES SHALL BE PROVIDED BY THE RTU MANUFACTURER.

B. HUMID STAT SHALL SENSE SPACE HUMIDITY. SPACE HUMIDITY SHOULD BE MAINTAINED BETWEEN 45% - 60% RH.

C. CO2 SENSOR SHALL PROVIDE INPUT TO THE RTU OF ACTUAL CO2 PPM LEVELS IN THE SPACE. SPACE CO2 LEVELS SHALL BE MAINTAINED AT 700PPM ABOVE OUTDOORS. THE RTU'S INTEGRAL CONTROLS SHALL MODULATE THE OUTSIDE AC DAMPER AS REQUIRED.

D. THERMOSTAT SHALL BE A 7-DAY PROGRAMMABLE TYPE. THERMOSTAT SHALL HAVE SECURITY FEATURES TO ONLY ALLOW AUTHORIZED PERSONNEL TO CHANGE THE PROGRAM. THERMOSTAT SHALL BE ACCESSIBLE VIA WIFI TO ALLOW REMOTE CHANGES OF TEMPERATURE SETPOINT.

E. SPACE STATIC PRESSURE SENSOR SHALL PROVIDE INPUT TO THE RTU TO MAINTAIN THE FACILITY AT +0.05" ABOVE OUTDOOR STATIC. RTU'S INTERNAL CONTROLS WILL MODULATE THE RELIEF FAN

GENERAL NOTES

1. SEE SHEET M001 FOR GENERAL NOTES.

KEY NOTES

1. ALL SENSORS ARE PROVIDED BY MANUFACTURER, TYP.
2. PROVIDE 7 DAY PROGRAMABLE WEB ENABLED TEMPERATURE AND PRESSURE SENSOR.
3. PROVIDE CEILING FAN WITH GEARLESS DIRECT DRIVE MOTOR AND RELAY FOR FIRE ALARM SHUT DOWN. MOUNT CEILING FANS 15' AFF.
4. WIRED WALL CONTROLLER FOR EACH INDIVIDUAL CEILING FAN. LABEL EACH CONTROLLER AS CF-1, CF-2, CF-3, AND CF-4. PROVIDED BY MANUFACTURER.
5. ALL HARD DUCT INDOORS TO HAVE PAINT GRIP FINISH AND TO BE PAINTED TO MATCH FABRIC DUCT.
6. GAS PIPING TO EQUIPMENT WITH DIRT LEG, VALVE AND UNION. SIZE AS NOTED. CONNECT GAS PIPING TO EQUIPMENT.
7. 30"Ø FABRIC DUCT, TOTAL LENGTH 395FT. UL723 AND UL2518 CLASSIFIED. TEMPERATURE RESISTANCE -75°F TO 230°F, COLOR WHITE. PRIHODA OR APPROVED EQUAL.
8. PROVIDE 48"X48" ALUMINUM HEAVY DUTY GYM GRILLE, BAR RETURN, STANDARD FINISH WHITE, TITUS MODEL 63FL OR APPROVED EQUAL.
9. THERMOSTAT SHALL BE LOW VOLTAGE, ELECTRONIC, PROGRAMMABLE TYPE WITH INTEGRAL TIME CLOCK, SEVEN-DAY PROGRAMMING FEATURES, DUAL HEATING AND COOLING SETPOINTS, AND NIGHT SETBACK CAPABILITIES. TRANE PIVOT SMART THERMOSTAT OR EQUAL BY HONEYWELL.

Johnson, Spellman & Associates, Inc.
350 Research Court, Suite 130
Peachtree Corners, GA 30092
770-447-4555 www.jsace.com

Menefee Architecture
Architecture | Planning | Design
1075 Brady Ave NW Atlanta GA 30318 | t 404.876.1011

COPYRIGHT

This drawing and all reproductions are copyrighted and the property of Menefee Architecture LLC and may not be used in any way without their permission.

COPYRIGHT 2018

ROME TENNIS INDOOR FACILITY

Rome, Georgia

DRAWN BY	CHECKED BY
SJM/SP	TLN

DATE 2019-02-15

REVISIONS	
NUMBER	DATE

TITL

FIRST LEVEL HVAC PLAN

PROJECT 201811

SHEET M201

75% CONSTRUCTION DOCUMENTS 2/15/2019

GENERAL NOTES

1. SEE SHEET M001 FOR GENERAL NOTES.

KEY NOTES

1. GAS PIPING TO EQUIPMENT WITH DIRT LEG, VALVE AND UNION. SIZE AS NOTED. CONNECT GAS PIPING TO EQUIPMENT.

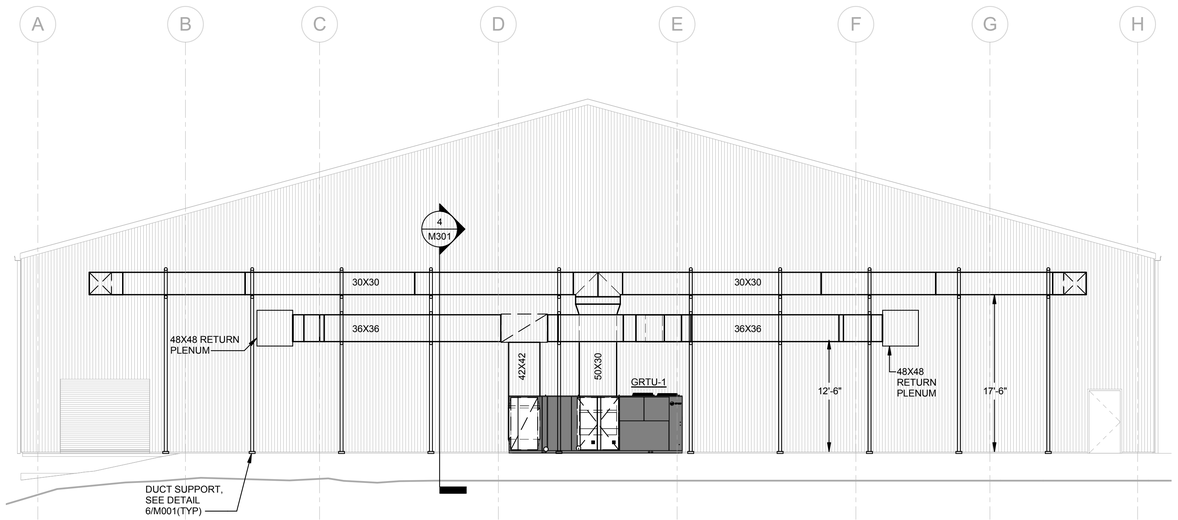

1 M301 GRTU-1 DUCT ELEVATION PLAN

SCALE: 1/8" = 1'-0"

0 4 8 16 FT

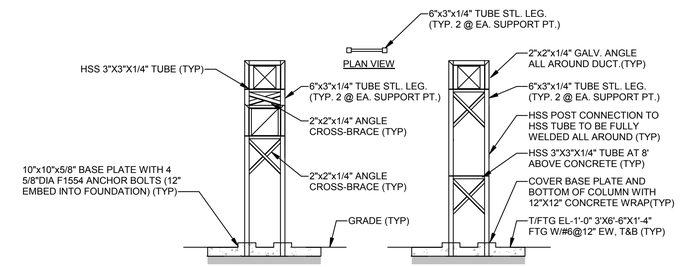

2 M301 DUCTWORK SUPPORT ABOVE CONCRETE SIDEWALK (SINGLE AND DOUBLE)

SCALE: 1/8" = 1'-0"

NOTES:
1. ADJUST HEIGHT OF SUPPORT STRUCTURE AS REQUIRED.
2. WELD ALL CONTACT POINTS OF STRUCTURAL MEMBERS.
3. ALL STEEL SHALL BE HOT DIPPED GALVANIZED.

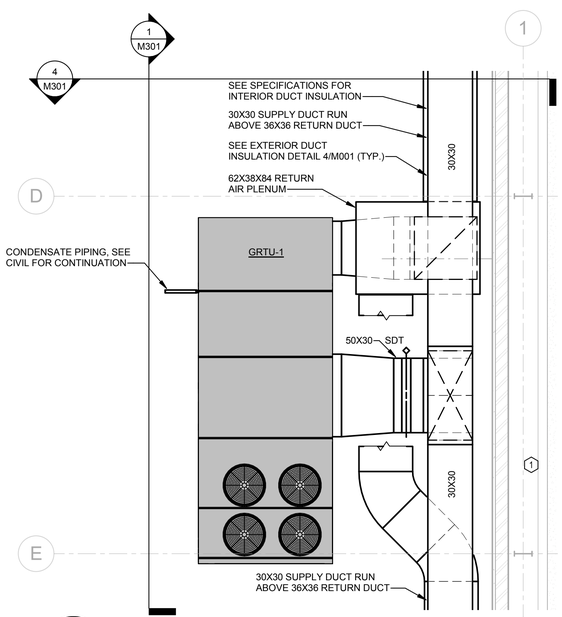

3 M301 GRTU-1 MECHANICAL PLAN

SCALE: 1/4" = 1'-0"

0 2 4 8 FT

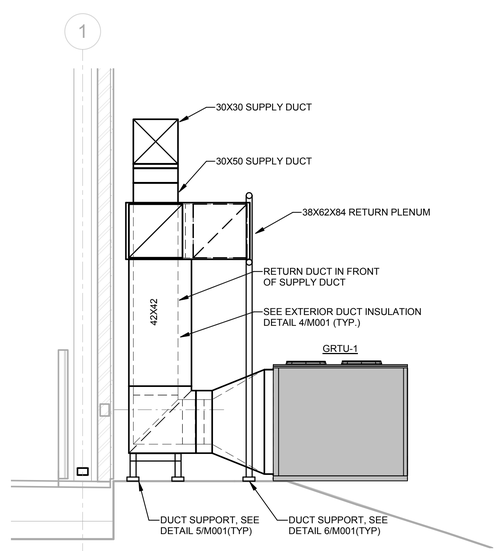

4 M301 GRTU-1 ELEVATION PLAN

SCALE: 1/4" = 1'-0"

0 2 4 8 FT

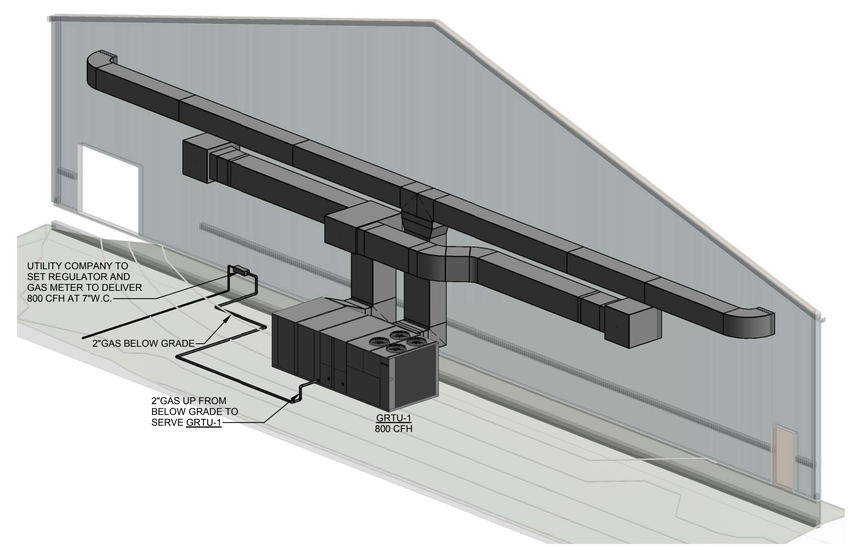

5 M301 GRTU-1 MECHANICAL PERSPECTIVE

SCALE: NO SCALE

GAS PRESSURE: 7"W.C.
TOTAL GAS LOAD: 800 CFH
TOTAL DEVELOPED LENGTH (7"W.C.): 100'

Johnson, Spellman & Associates, Inc.
350 Research Court, Suite 130
Peachtree Corners, GA 30092
770-447-4555 www.jsace.com

Menefee Architecture
Architecture | Planning | Design
1075 Brady Ave NW Atlanta GA 30318 | t 404.876.1011

COPYRIGHT

This drawing and all reproductions are copyrighted and the property of Menefee Architecture LLC and may not be used in any way without their permission.

COPYRIGHT 2018

ROME TENNIS INDOOR FACILITY
Rome, Georgia

DRAWN BY	CHECKED BY
SJM/SP	TLN

DATE
2019-02-15

REVISIONS	
NUMBER	DATE

TITL
HVAC SECTIONS

PROJECT
201811

SHEET
M301

75% CONSTRUCTION DOCUMENTS 2/15/2019

ABBREVIATIONS

A	AMPERES
AB	ABOVE
AC	ALTERNATING CURRENT
AF	AMPERE FRAME
AFCI	ARC FAULT CIRCUIT INTERRUPTER
AFF	ABOVE FINISHED FLOOR
AFG	ABOVE FINISHED GRADE
AHC	ABOVE HUNG CEILING
AHU	AIR HANDLING UNIT
AIC	AMPERE INTERRUPTING CAPACITY
ANN	ANNUNCIATOR
ASSD	AIR SAMPLING SMOKE DETECTION
ASTS	AUTOMATIC STATIC TRANSFER SWITCH
AT	AMPERE TRIP
ATS	AUTOMATIC TRANSFER SWITCH
AUTO	AUTOMATIC
AUX	AUXILIARY
AWG	AMERICAN WIRE GAUGE
BAS	BUILDING AUTOMATION SYSTEM
BATT	BATTERY
BB	BACKBOARD
BC	BARE COPPER
BC/BF	DEVICES MOUNTED BELOW SUSPENDED CEILING AND BELOW RAISED FLOOR
BFF	BELOW FINISHED FLOOR
BKR	BREAKER
BLDG	BUILDING
BRF	BELOW RAISED FLOOR
BTM	BOTTOM
BW	BOTH WAYS
C	CONDUIT
CAB	CABINET
CATV	CABLE TELEVISION
CB	CIRCUIT BREAKER
CC	CCTV CAMERA
CKT	CIRCUIT
CL	CENTERLINE
CLG	CEILING
CO	COMPANY
COL	COLUMN
COMM	COMMUNICATIONS
CONC	CONCRETE
CONN	CONNECTION, CONNECT
CONTR	CONTRACTOR
COORD	COORDINATE
CT	CURRENT TRANSFORMER
CUH	CABINET UNIT HEATER
CW	COOL WHITE
D	DEEP
D Δ	DELTA CONNECTION
DB	DECIBEL
DC	DIRECT CURRENT
DET	DETECTOR
DIA	DIAMETER
DISC	DISCONNECT
DIST	DISTRIBUTION
DIV	DIVISION
DN	DOWN
DP	DISTRIBUTION PANEL
DWG	DRAWING
EA	EACH
EF	EXHAUST FAN
EG	EQUIPMENT GROUND
EL	ELEVATION
ELEC	ELECTRIC(AL)
ELU	EMERGENCY LIGHT UNIT
EMER	EMERGENCY
EMT	ELECTRICAL METALLIC TUBING
ENCL	ENCLOSURE
EO	ELECTRONICALLY OPERATED
EPO	EMERGENCY POWER OFF
EPR	ETHYLENE PROPYLENE RUBBER INSULATION
EQ	EQUAL
EQUIP, EQPM	EQUIPMENT
EUH	ELECTRIC UNIT HEATER
EWC	ELECTRIC WATER COOLER
EWH	ELECTRIC WALL HEATER
EX, EXIST	EXISTING
EXR	EXISTING RELOCATED TO LOCATION ON PLAN
EXT	EXTERIOR
F	FUSE(D)
FA	FIRE ALARM
FACP	FIRE ALARM CONTROL PAEL
FCU	FAN COIL UNIT
FIXT	FIXTURE
FL	FLOOR
FLA	FULL LOAD AMPERES
FLEX	FLEXIBLE
FLR	FLOOR
FLUOR	FLUORESCENT
FO	FIBER OPTIC
FRA	FIRE ALARM REMOTE ANNUNCIATOR
FURN	FURNISH
FUT	FUTURE
FVNR	FULL VOLTAGE NON-REVERSING
G, GND	GROUND
GALV	GALVANIZE(D)
GEN	GENERATOR
GFCI	GROUND FAULT CIRCUIT INTERRUPTER
GFP	GROUND FAULT PROTECTION
HD	HEAVY DUTY
HGT, HT	HEIGHT
HH	HAND HOLE
HID	HIGH INTENSITY DISCHARGE
HO	HIGH OUTPUT
HOA	HAND-OFF-AUTOMATIC
HP	HORSEPOWER
HPF	HIGH POWER FACTOR
HPS	HIGH PRESSURE SODIUM
HTR	HEATER
HV	HIGH VOLTAGE
IC	INTERCOMMUNCATION
ID	IDENTIFY, IDENTIFICATION
IMC	INTERMEDIATE METAL CONDUIT
INCAND	INCANDESCENT
INSUL	INSULATION
IPS	INTERRUPTIBLE POWER SUPPLY
IR	PASSIVE INFRARED
JB, J-BOX	JUNCTION BOX
JCT	JUNCTION
KA	KILAMPERES
KCMIL	THOUSAND CIRCULAR MILS
KILO	THOUSAND
KV	KILOVOLTS
KVA	KILOVOLT-AMPERES
KVAR	KILOVARS
KW	KILOWATTS
LT(S)	LIGHT(S)
LTG	LIGHTING
MA	MILLIAMPERE
MAINT	MAINTAINED
MAN	MANUAL
MAX	MAXIMUM
MC	METAL CLAD CABLE
MCB	MAIN CIRCUIT BREAKER
MCC	MOTOR CONTROL CETNER
MCM	THOUSAND CIRCULAR MILS
MDP	MAIN DISTRIBUTION PANEL
MEGA	MILLION
MFR	MANUFACTURER
MGB	MAIN GROUND BUS
MH	METAL HALIDE
MIN	MINIMUM
MLO	MAIN LUGS ONLY
MO	MANUALLY OPERATED
MTD	MOUNT(ED)
MTR	MOTOR CONTROL CETNER
MTS	MANUAL TRANSFER SWITCH
MV	MEDIUM VOLTAGE
MW	MEGA WATTS
N	NORTH
NC	NORMALLY CLOSED
NEC	NATIONAL ELECTRIC CODE
NF	NON-FUSED
NIC	NOT IN CONTRACT
NL	NIGHT LIGHT
NO	NORMALLY OPEN
NTS	NOT TO SCALE
OH	OVERHEAD
OHD	OVERHEAD DOOR OPERATOR
OL	OVERLOAD
P	POLE(S)
P/T/Z	PAN TILT ZOOM
PB	PUSHBUTTON
PB	PULLBOX
PC	PHOTOCELL
PF	POWER FACTOR
PH	PHASE
PL	PILOT LIGHT
PNL	PANEL
PR	PAIR
PRI	PRIMARY
PVC	POLYVINYL CHLORIDE
PWR	POWER
REC	RECEPTACLE
RECT	RECTIFIER
REFR	REFRIGERATOR
RGS	RIGID GALVANIZED STEEL CONDUIT
RHW	EPR INSULATED WIRE
RM	ROOM
SB	SWITCHBOARD
SCH	SCHEDULE
SEC	SECONDARY
SFL	SUB-FEED LUGS
SHT	SHEET
SPC	SPACE
SPKR	SPEAKER
SPR	SPARE
SQ	SQUARE
SS	STAINLESS STEEL
SSRVS	SOLID STATE REDUCED VOLTAGE STARTER
ST	SHUNT TRIP
STP	SHIELDED TWISTED PAIR
STS	STATIC TRANSFER SWITCH
SUSP	SUSPEND(ED)
SW	SWITCH
SWBD	SWITCHBOARD
SWGR	SWITCHGEAR
T, TEL, TELE	TELEPHONE
T-STAT	THERMOSTAT
TB	TAP BOX
TBB	TELECOMMUNICATIONS BACKBOARD
TBD	TO BE DETERMINED
TC	TIME CLOCK
TEMP	TEMPORARY
TERM	TERMINAL, TERMINATE
THW	PVC INSULATED WIRE
THWN/ THHN	PVC & NYLON INSULATED WIRE
TSS	TWO SPEED STARTER
TVSS	TRANSIENT VOLTAGE SURGE SUPPRESSOR
TWU	THROUGH-THE-WALL UNIT
TYP	TYPICAL
U	ULTRASONIC
UC	UNDER COUNTER
UG	UNDERGROUND
UH	UNIT HEATER
UON, UNO	UNLESS OTHERWISE NOTED
UPS	UNINTERRUPTIBLE POWER SUPPLY
UTIL	UTILITY
UTP	UNSHIELDED TWISTED PAIR
V	VOLT(S)
VA	VOLT-AMPERES
VAR	REACTIVE VOLT AMPS
VAV	VARIABLE AIR VOLUME
VFD	VARIABLE FREQUENCY DRIVE
W	WIRE
W	WATTS
W/	WITH
WP	WEATHERPROOF
WT	WATERTIGHT
XFMR	TRANSFORMER
XHHW	CROSS LINKED POLYETHYLENE INSULATED WIRE
XP	EXPLOSION PROOF
Y	WYE CONNECTION

ELECTRICAL ANNOTATION

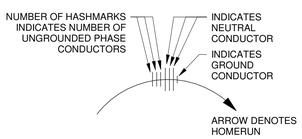

1 Wiring Annotation

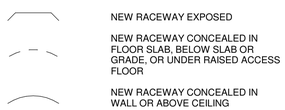

2 Electrical Line Types - Wiring

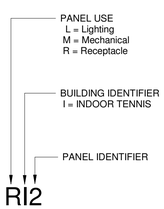

3 Panel Numbering System

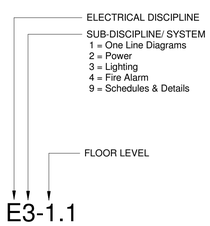

4 Sheet Numbering System

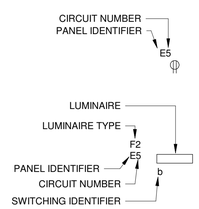

5 Device/Eqpm Identification

DRAWING INDEX

E0-0.0	DRAWING INDEX, ABBREVIATIONS, & ANNOTATIONS
E0-0.1	SYMBOLS LEGEND & KEY PLANS
E0-1.0	ELECTRICAL SITE PLAN - POWER DEMOLITION
E0-1.1	ELECTRICAL SITE PLAN - POWER
E1-1.0	ELECTRICAL ONE-LINE DIAGRAM
E2-1.0	FLOOR PLAN - POWER
E3-1.0	FLOOR PLAN - LIGHTING
E3-1.1	SPORTS LIGHTING PHOTOMETRICS
E4-1.0	FLOOR PLAN - FIRE ALARM
E9-0.1	PANEL SCHEDULES
E9-0.2	PANEL SCHEDULES
E9-3.1	SCHEDULES & DETAILS - LIGHTING

12

BCE
BARNETT CONSULTING ENGINEERS
655 Engineering Drive
Suite 150
Peachtree Corners, GA 30092
404.382.9550
www.bce-eng.com

Menefee Architecture | Architecture Planning Design
1075 Brady Ave NW Atlanta GA 30318 | t 404.876.1011

COPYRIGHT

This drawing and all reproductions are copyrighted and the property of Menefee Architecture LLC and may not be used in any way without their permission.

COPYRIGHT 2018

ROME TENNIS - INDOOR COURTS

Rome, Georgia

DRAWN BY	CHECKED BY
BCE	BCE

DATE
2019-02-15

REVISIONS	
NUMBER	DATE

TITLE
DRAWING INDEX, ABBREVIATIONS, & ANNOTATIONS

PROJECT NUMBER
201811

SHEET NUMBER
E0-0.0

75% CONSTRUCTION DOCUMENTS 2/15/2019

SYMBOLS LEGEND

ONE-LINE SYMBOL SCHEDULE

Symbol	Description
	BATTERY
	CIRCUIT BREAKER, BOLT-ON
	CIRCUIT BREAKER, BOLT-ON, FUSED
	CIRCUIT BREAKER, BOLT-ON, STARTER
	CIRCUIT BREAKER, BOLT-ON, STARTER-DISCONNECT
	CIRCUIT BREAKER, DRAW-OUT
	CIRCUIT BREAKER, DRAW-OUT, FUSED
	CIRCUIT BREAKER, FULL PLUG-IN
	CIRCUIT BREAKER, LINE SIDE PLUG-IN
	CIRCUIT BREAKER, PLUG-IN
	CIRCUIT BREAKER, PLUG-IN, FUSED
EQPM #E#.#	CIRCUIT CONTINUES TO "EQPM", ON DRAWING "#/E#.#"
	CONTACT, NORMALLY CLOSED
	CONTACT, NORMALLY OPEN
	CRADLE FOR DRAW-OUT CIRCUIT BREAKER
	CURRENT TRANSFORMER
	DC TO DC CONVERTER
	DELTA CONNECTION
	DISCONNECT SWITCH
	DISCONNECT SWITCH WITH FUSE
	DISCONNECT SWITCH WITH FUSE AND STARTER
ID	FEEDER ID – REFER TO FEEDER SCHEDULE
	FUSE
	FUSE, DRAW-OUT
	GROUND
	GROUND FAULT
	INVERTER
	LIGHTNING SURGE ARRESTOR
	LUG
	MOTOR
	REACTOR
	RECTIFIER
	RESISTOR
	SHUNT TRIP
	THERMAL OVERLOAD TRIP
	TRANSFORMER
	UNDER VOLTAGE DEVICE
	UTILITY METER
	WYE CONNECTION
	WYE CONNECTION WITH RESISTOR GROUNDED NEUTRAL
	WYE CONNECTION WITH SOLID GROUNDED NEUTRAL

DEVICE SYMBOL LEGEND

FLOOR	CEILING	WALL STANDARD HEIGHT	WALL NON-STANDARD HEIGHT	DESCRIPTION
J	J	J		JUNCTION BOX
L	L	L		LOW VOLTAGE JUNCTION BOX
				SINGLE RECEPTACLE
				DUPLEX RECEPTACLE
				DUPLEX RECEPTACLE, SPLIT-WIRED
				DOUBLE DUPLEX RECEPTACLE
				DOUBLE DUPLEX RECEPTACLE, SPLIT-WIRED
				GFCI DUPLEX RECEPTACLE
				GFCI DOUBLE DUPLEX RECEPTACLE
				SPECIAL PURPOSE RECEPTACLE
				MULTI-SERVICE ASSEMBLY FLOOR OUTLET

POWER SYMBOL LEGEND

SYMBOL	DESCRIPTION
	COMBINATION STARTER
	DISCONNECT SWITCH. 30/3/F/WP INDICATES 30 AMP, 3-POLE, F=FUSED / NF=NOT-FUSED, WEATHERPROOF
	EQUIPMENT AS NOTED. DOUBLE LINE INDICATES FRONT OF EQUIPMENT
	MOTOR
	MOTOR RATED SWITCH
	MOTOR STARTER
	SURFACE MOUNTED PANELBOARD
	FLUSH MOUNTED PANELBOARD
	REVENUE METER
KB	KNOX BOX

MISCELLANEOUS SYMBOLS

X	NOTE REFERENCE SYMBOL
	CABLE TRAY
	PUSH BUTTON
R	RELAY
	HEATER
	FLUSH MOUNTED EQUIPMENT AS NOTED

GROUNDING SYMBOLS

	GROUND BUS-TYPE AS NOTED
	DRIVEN GROUND ROD
	EXPOSED GROUND CONDUCTOR
	EXTERIOR BURIED GROUND RING CONDUCTOR
	GROUND CONDUCTOR BELOW RAISED FLOOR
G	CONDUCTOR IN RACEWAY-TYPE AND SIZE AS NOTED
	BOND CONNECTION

LUMINAIRE MOUNTING & WIRING

SWITCHED NORMAL	SWITCHED EMERGENCY	UNSWITCHED EMERGENCY	DESCRIPTION
			SURFACE MOUNTED
			RECESSED
			WALL MOUNTED
			PENDANT

LIGHTING SYMBOLS

SYMBOL	DESCRIPTION
	EMERGENCY LIGHTING UNIT
	COMBINATION EMERGENCY LIGHTING UNIT / EXIT SIGN
	WALL WASH, ACCENT, OR DIRECTIONAL LUMINAIRE
	TRACK MOUNTED LUMINAIRE
	POLE MOUNTED AREA LIGHT
	IN-GRADE LUMINAIRE
	BOLLARD / POST-TOP LUMINAIRE
$	SINGLE POLE SWITCH
$T	DIGITAL TIME SWITCH
S	LIGHTING CONTROL STATION
P	EXTERIOR PHOTO CELL
	WALL MOUNTED EXIT SIGN
	CEILING MOUNTED EXIT SIGN

FIRE ALARM SYMBOL LEGEND

SYMBOL	DESCRIPTION
C	COMBINATION HORN AND VISUAL DEVICE. "C" INDICATES CEILING MOUNTED.
C	COMBINATION SPEAKER AND VISUAL DEVICE. "C" INDICATES CEILING MOUNTED.
S C	SPEAKER ONLY. "C" INDICATES CEILING MOUNTED
F C	HORN ONLY. "C" INDICATES CEILING MOUNTED
/	STROBE WALL MOUNTED / STROBE CEILING MOUNTED
AIM	ADDRESSABLE INPUT MODULE
AOM	ADDRESSABLE OUTPUT MODULE
F	MANUAL PULL STATION
KB	KNOX BOX
S	SMOKE DETECTOR
FAA	FIRE ALARM ANNUNCIATOR
FACP	FIRE ALARM CONTROL PANEL

BCE
BARNETT CONSULTING ENGINEERS
655 Engineering Drive
Suite 150
Peachtree Corners, GA 30092
404.382.9550
www.bce-eng.com

Menefee Architecture | Architecture Planning Design
1075 Brady Ave NW Atlanta GA 30318 | t 404.876.1011

COPYRIGHT

This drawing and all reproductions are copyrighted and the property of Menefee Architecture LLC and may not be used in any way without their permission.

COPYRIGHT 2018

ROME TENNIS - INDOOR COURTS
Rome, Georgia

DRAWN BY	CHECKED BY
BCE	BCE

DATE
2019-02-15

REVISIONS	
NUMBER	DATE

TITLE
SYMBOLS LEGEND & KEY PLANS

PROJECT NUMBER
201811

SHEET NUMBER
E0-0.1

75% CONSTRUCTION DOCUMENTS 2/15/2019

SITE PLAN NOTES

GENERAL NOTES:

A. DEMOLITION INDICATED ON DRAWINGS IS INTENDED TO SHOW LOCATIONS AND GENERAL SCOPE OF DEMOLITION. THE FULL EXTENT OF DEMOLITION REQUIRED TO ACCOMODATE NEW CONSTRUCTION AND SPECIFIED FINISHES MUST BE DETERMINED BY THE CONTRACTOR BASED ON THE FULL CONTRACT DOCUMENTS AND THE SITE CONDITIONS. CONTACT THE ARCHITECT WITH ANY QUESTIONS REGARDING THE REQUIRED DEMOLITION SCOPE.

B. HOMERUN NUMBERS AND PANELBOARDS INDICATED ARE BASED ON EXISTING BUILDING DRAWINGS.

C. PROVIDE REVISED PANELBOARD SCHEDULES FOR ALL PANELBOARDS MODIFIED DURING THE PROJECT.

D. PROTECT EXISTING WORK INDICATED TO REMAIN.

E. MAINTAIN CONTINUITY OF WIRING WHICH SERVES EQUIPMENT AND DEVICES NOT SCHEDULED FOR REMOVAL.

F. EXISTING ELECTRICAL EQUIPMENT IS SCHEDULED TO REMAIN IN PLACE, UNLESS NOTED OTHERWISE.

G. PRIOR TO BEGINNING WORK, FIELD-VERIFY EXISTING EQUIPMENT CONFIGURATION AND RATINGS. WHERE DISCREPANCIES EXIST, NOTIFY THE OWNER PRIOR TO PROCEEDING WITH THE WORK.

H. COORDINATE WITH OTHER TRADES TO DISCONNECT MOTORS HEATERS, OR OTHER EQUIPMENT AS REQUIRED FOR THE DEMOLITION OF OTHER TRADES' WORK.

KEYNOTES:

1. APPROXIMATE LOCATION OF EXISTING UTILITY PAD MOUNT TRANSFORMER.

2. APPROXIMATE LOCATION OF EXISTING EXTERIOR COURT LIGHTING PANELBOARD & CONTACTOR.

3. REMOVE EXISTING COURT LIGHTING SERVING COURTS IN NEW BUILDING FOOTPRINT (24 LIGHT POLES). REMOVE FIXTURES, CONDUIT AND WIRING BACK TO PANELBOARD.

4. EXISTING SITE PLAN DRAWING FROM ASBUILTS PROVIDED BY OWNER.

(10) GFCI DUPLEX RECEPTACLE IN WEATHERPROOF ENCLOSURE WITH [illegible] MOUNTING WITH ARCHITECTURAL DETAILS PRIOR TO ROUGH-IN. DO NOT INSTALL CONDUIT UNDER COURTS.

(11) 1-1/4" EMPTY CONDUIT WITH PULL-STRING TO PANEL "T1" FOR FUTURE COURTS.

(12) 1-1/4" EMPTY CONDUIT WITH PULL-STRING TO PANEL "T2" FOR FUTURE COURTS.

(13) CONTROL VIA PHOTOCELL (ON) AND TIMECLOCK (OFF), ROUTE THROUGH LIGHTING CONTACTOR "LC03M1" RUN #8 FOR THE ENTIRE LENGTH OF THE CIRCUIT.

(14) TO SOUND SYSTEM JUNCTION BOX LOCATED AT SCORER'S TABLE.

(15) (1) WEST PENN AQ 227 IN 1" CONDUIT.

(16) (2) WEST PENN AQ 277 IN 1" CONDUIT.

(17) SOUND SYSTEM JUNCTION BOX. PROVIDE 24"x24"x8" BOX MOUNTED AT SCORER'S TABLE WITH 15"x20" CUT-OUT IN COVERPLATE FOR FSR #OWB-X3-FM-GANG WEATHERPROOF BOX.

(18) (2) 1-1/4" EMPTY CONDUIT WITH PULL-WIRE TO SCORER'S TABLE.

(19) DISCONNECT SWITCH IN NEMA 4X, LOCKABLE ENCLOSURE MOUNTED ON POLE AT 10'-0" A.F.F. TYPICAL FOR ALL.

(20) RUN #8 FOR THE ENTIRE LENGTH OF THE CIRCUIT.

(21) 3/4" EMPTY CONDUIT WITH PULL-WIRE TO ELECTRICAL ROOM #104 IN RESTROOM PAVILION.

(22) 3/4" EMPTY CONDUIT WITH PULL-WIRE TO ELECTRICAL ROOM #103 IN CLUBHOUSE BUILDING.

(23) UNDERGROUND SECONDARY SERVICE, REFER TO RISER DIAGRAM.

(24) (2) 4" PVC CONDUITS WITH PULL-WIRE TO PROPERTY LINE FOR TELEPHONE SERVICE, CAP AND STUB UP 3'-0" ABOVE FINISHED GRADE. COORDINATE LOCATION AND DETAILS WITH TELEPHONE COMPANY PRIOR TO ROUGH-IN.

(25) 3/4" EMPTY CONDUIT WITH PULL-WIRE TO ELECTRICAL ROOM #103 IN CLUBHOUSE BUILDING. PROVIDE 120-VOLT CONNECTION TO CAMERA FROM CIRCUIT LA2-30.

1 Ground Level - Site DEMO
NOT TO SCALE

BCE
BARNETT CONSULTING ENGINEERS
655 Engineering Drive
Suite 150
Peachtree Corners, GA 30092
404.382.9550
www.bce-eng.com

Menefee Architecture | Architecture Planning Design
1075 Brady Ave NW Atlanta GA 30318 | t 404.876.1011

COPYRIGHT

This drawing and all reproductions are copyrighted and the property of Menefee Architecture LLC and may not be used in any way without their permission.

COPYRIGHT 2018

ROME TENNIS - INDOOR COURTS

Rome, Georgia

DRAWN BY	CHECKED BY
BCE	BCE

DATE
2019-02-15

REVISIONS	
NUMBER	DATE

TITLE
ELECTRICAL SITE PLAN - POWER DEMOLITION

PROJECT NUMBER
201811

SHEET NUMBER
E0-1.0

75% CONSTRUCTION DOCUMENTS 2/15/2019

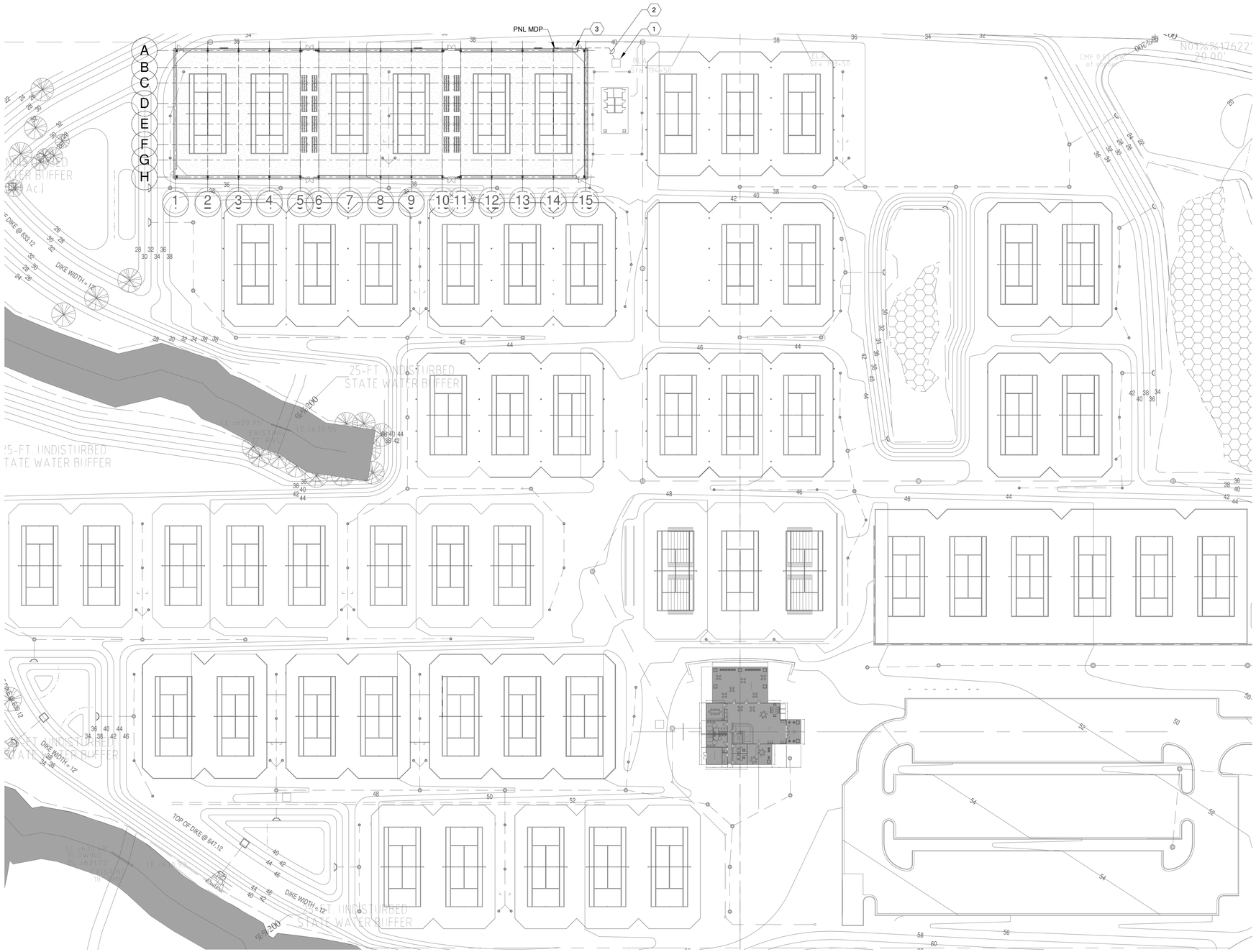

1 Ground Level - Site
1" = 50'-0"

SITE PLAN NOTES

KEYNOTES:

1. APPROXIMATE LOCATION OF EXISTING UTILITY PAD MOUNT TRANSFORMER.
2. PROVIDE UNDERGROUND SECONDARY SERVICE FROM UTILITY PAD MOUNT TRANSFORMER. COORDINATE WITH UTILITY. REFER TO ELECTRICAL ONE-LINE DIAGRAM FOR ADDITIONAL INFORMATION.
3. NEW INDOOR TENNIS BUILDING MAIN SERVICE PANELBOARD.

0' 12.5' 25' 50' 100'

BCE
BARNETT CONSULTING ENGINEERS
655 Engineering Drive
Suite 150
Peachtree Corners, GA 30092
404.382.9550
www.bce-eng.com

Menefee Architecture
Architecture | Planning | Design
1075 Brady Ave NW Atlanta GA 30318 | t 404.876.1011

COPYRIGHT

This drawing and all reproductions are copyrighted and the property of Menefee Architecture LLC and may not be used in any way without their permission.

COPYRIGHT 2018

ROME TENNIS - INDOOR COURTS

Rome, Georgia

DRAWN BY	CHECKED BY
BCE	BCE

DATE
2019-02-15

REVISIONS	
NUMBER	DATE

TITLE
ELECTRICAL SITE PLAN - POWER

PROJECT NUMBER
201811

SHEET NUMBER
E0-1.1

75% CONSTRUCTION DOCUMENTS 2/15/2019

TRANSFORMER CONNECTION SCHEDULE							
Panel Name	Transformer Rating	Mounting	Transformer Primary Voltage	Transformer Secondary Voltage	Transformer Secondary Overcurrent Protection	Transformer Secondary Feeder	Grounding Electrode Conductor
TR1	30.00 kVA		480 V	208Y/120V	110 A	4#1, 1#8G - 1.25"C	1#8G - 0.75"C
TR2	30.00 kVA		480 V	208Y/120V	110 A	4#1, 1#8G - 1.25"C	1#8G - 0.75"C

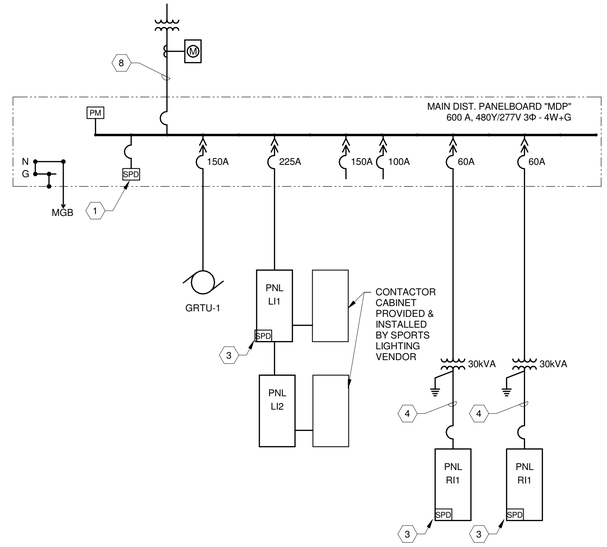

1 ELECTRICAL ONE-LINE DIAGRAM
NOT TO SCALE

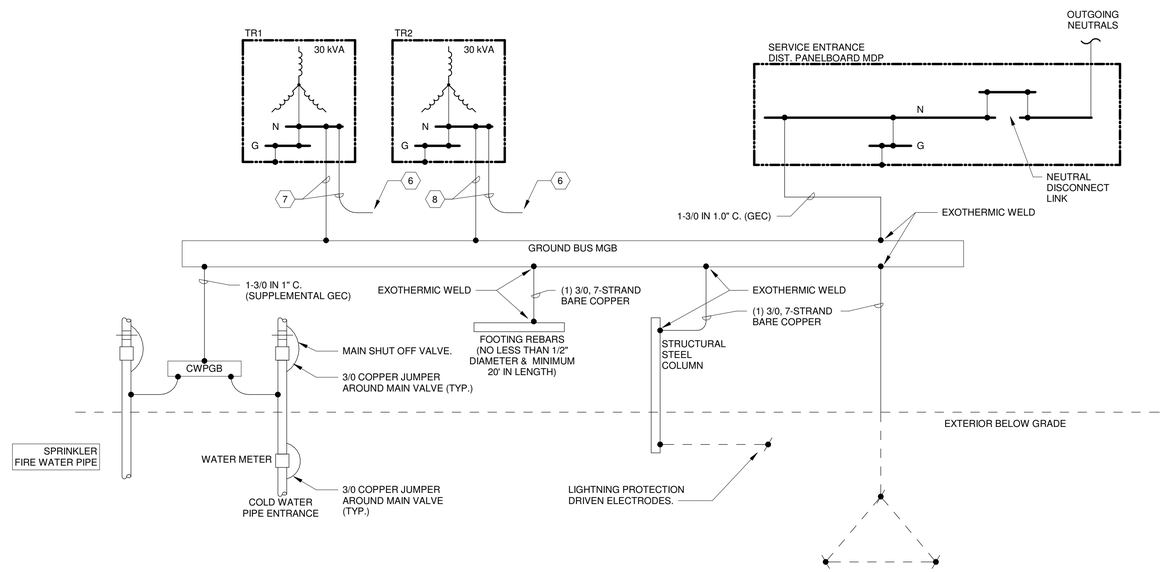

2 ELECTRICAL ONE-LINE GROUNDING
NOT TO SCALE

ONE-LINE NOTES

1. SERVICE ENTRY SPD SHALL BE 240 KA, LOCATION "C" DEVICE, INTERNALLY MOUNTED. LENGTH OF EACH CONDUCTOR SHALL NOT EXCEED 3'-0".
2. DISTRIBUTION SPD SHALL BE 180 KA, LOCATION "B" DEVICE, INTERNALLY MOUNTED. LENGTH OF EACH CONDUCTOR SHALL NOT EXCEED 3'-0".
3. PANELBOARD SPD SHALL BE 120 KA, LOCATION "A" DEVICE, INTERNALLY MOUNTED. LENGTH OF EACH CONDUCTOR SHALL NOT EXCEED 3'-0".
4. LENGTH OF EACH CONDUCTOR SHALL NOT EXCEED 10'-0".
5. WRITTEN RECORD OF THE GROUND FAULT PERFORMANCE TEST RESULTS AS SPECIFIED SHALL BE PROVIDED TO THE ELECTRICAL INSPECTOR OR THE ELECTRICAL PLANS EXAMINER PRIOR TO THE FINAL ELECTRICAL INSPECTION.
6. EACH TRANSFORMER/SEPARATELY DERIVED SYSTEM SHALL BE BONDED TO THE NEAREST AVAILABLE POINT OF THE INTERIOR METAL WATER PIPING SYSTEM AND STRUCTURAL STEEL IN THE AREA SERVED BY EACH SEPARATELY DERIVED SYSTEM, NEC 250-104-4. (TYPICAL).
7. SEE DRY-TYPE TRANSFORMER SCHEDULE - FOR SIZE INFORMATION (TYPICAL).
8. PROVIDE (2) SETS 4#350KCMIL IN 3.00" CONCRETE ENCASED PVC CONDUIT.

Menefee Architecture | Architecture Planning Design
1075 Brady Ave NW Atlanta GA 30318 | t 404.876.1011

COPYRIGHT

This drawing and all reproductions are copyrighted and the property of Menefee Architecture LLC and may not be used in any way without their permission.

COPYRIGHT 2018

ROME TENNIS - INDOOR COURTS
Rome, Georgia

DRAWN BY	CHECKED BY
BCE	BCE

DATE
2019-02-15

REVISIONS	
NUMBER	DATE

TITLE
ELECTRICAL ONE-LINE DIAGRAM

BCE
BARNETT CONSULTING ENGINEERS
655 Engineering Drive
Suite 150
Peachtree Corners, GA 30092
404.382.9550
www.bce-eng.com

PROJECT NUMBER
201811

SHEET NUMBER
E1-1.0

75% CONSTRUCTION DOCUMENTS 2/15/2019

MECHANICAL EQUIPMENT - ELECTRICAL CONNECTION SCHEDULE

Mark/ID	VOLTAGE	NUMBER OF POLES	PANEL	CIRCUIT NUMBER	Mech Disconnecting Means
CEILING FAN					
CF-1	208 V	2	RI2	10,12	DIVISION 23; WALL CONTROLLER PROVIDED BY DIVISION 23. PROVIDE WIRING BETWEEN FAN AND WALL CONTROLLER.
CF-2	208 V	2	RI2	14,16	DIVISION 23; WALL CONTROLLER PROVIDED BY DIVISION 23. PROVIDE WIRING BETWEEN FAN AND WALL CONTROLLER.
CF-3	208 V	2	RI1	10,12	DIVISION 23; WALL CONTROLLER PROVIDED BY DIVISION 23. PROVIDE WIRING BETWEEN FAN AND WALL CONTROLLER.
CF-4	208 V	2	RI1	14,16	DIVISION 23; WALL CONTROLLER PROVIDED BY DIVISION 23. PROVIDE WIRING BETWEEN FAN AND WALL CONTROLLER.
GROUND MOUNTED ROOF TOP					
GRTU-1	480 V	3	MDP	2,4,6	VFD AND UNIT MOUNTED DISCONNECT BY DIVISION 23.

POWER NOTES

GENERAL NOTES:

A. COORDINATE EXACT LOCATION OF RECEPTACLES WITH ARCHITECT, TYPICAL.

B. COORDINATE HEIGHT OF ALL OUTLETS WITH ARCHITECTURAL DRAWINGS.

C. REFER TO VOICE/DATA DRAWINGS FOR ADDITIONAL REQUIREMENTS.

D. REFER TO SHEET E9-0.0 FOR ELECTRICAL CONNECTION REQUIRMENTS FOR MECHANCIAL AND PLUMBING EQUIPMENT, TYPICAL.

E. PROVIDE LABEL ON FIRE ALARM PANEL IDENTIFYING CIRCUIT FED FROM INFORMATION PER NFPA 72, PARAGRAPH 4.4.1.4.2.3.

F. ALL WALL MOUNTED DEVICES IN THE COURT AREA SHALL BE EXTENDED FROM THE WALL SO THAT THEY ARE ACCESSIBLE BEYOND THE EDGE OF THE WALL PADDING. COORDINATE WITH ARCHITECT PRIOR TO INSTALLATION.

KEYNOTES:

1. COORDINATE WITH SECURITY AND DOOR HARDWARE VENDORS FOR THE INSTALLATION OF ADA OPENERS AND/OR ELECTRIFIED PANIC BAR. PROVIDE 120V POWER FOR EQUIPMENT.

2. PROVIDE 120V POWER CONNECTION TO FIRE ALARM CONTROL PANEL. COMPLY WITH NFPA 72, PARAGRAPH 4.4.1.4.2.1 AND 4.4.1.4.2.2 - DEDICATED BRANCH CIRCUIT SHALL BE MECHANICALLY PROTECTED, HAVE A RED MARKING, AND BE LABELED "FIRE ALARM CIRCUIT".

3. PROVIDE 120V DEDICATED BRANCH CIRCUIT FOR SCOREBOARD. COORDINATE EXACT LOCATION WITH ARCHITECT.

4. PROVIDE POWER FEEDS AND EQUIPMENT POWER CONNECTIONS FOR ALL MECHANICAL AND PLUMBING EQUIPMENT PROVIDE LOCAL SAFETY DISCONNECT SWITCHES AT EACH EQUIPMENT LOCATION. REFER MECHANICAL EQUIPMENT - ELECTRICAL CONNECTION SCHEDULE, THIS SHEET, FOR REQUIREMENTS FOR MECHANCIAL EQUIPMENT, TYPICAL.

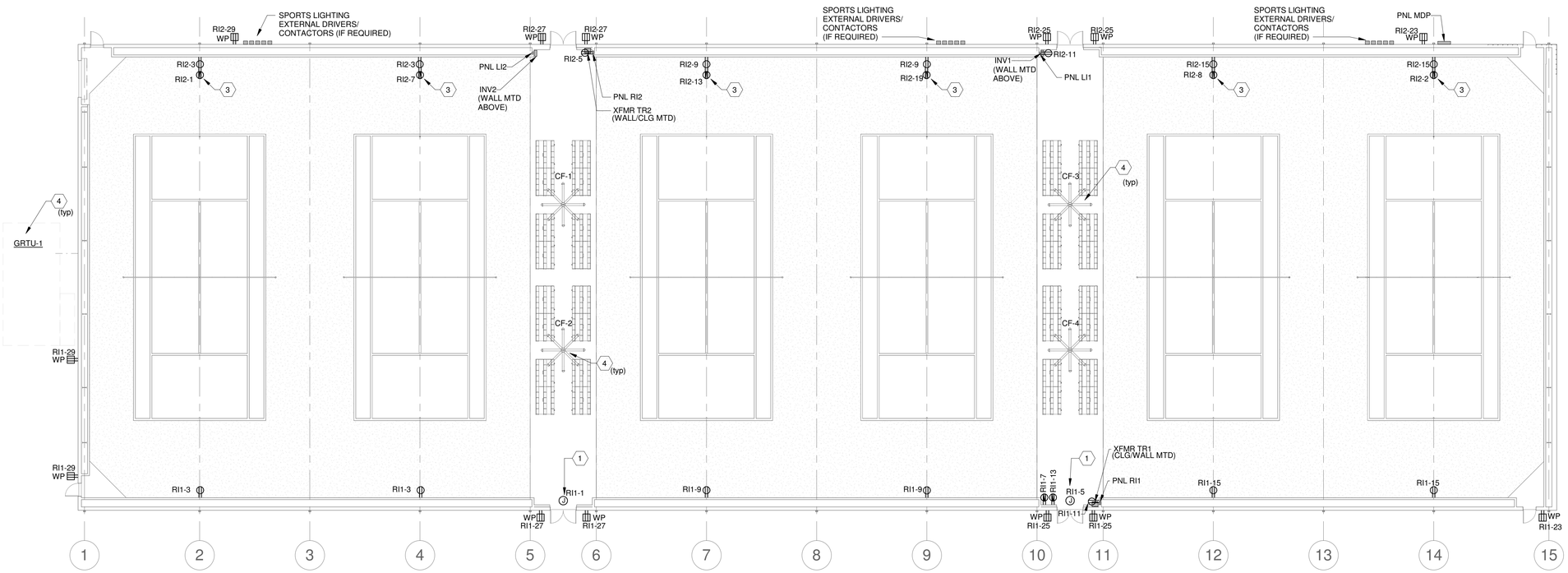

1 FLOOR PLAN - POWER
1/16" = 1'-0"

0' 2' 4' 8' 16' 32'

BCE
BARNETT CONSULTING ENGINEERS
655 Engineering Drive
Suite 150
Peachtree Corners, GA 30092
404.382.9550
www.bce-eng.com

Menefee Architecture | Architecture Planning Design
1075 Brady Ave NW Atlanta GA 30318 | t 404.876.1011

COPYRIGHT

This drawing and all reproductions are copyrighted and the property of Menefee Architecture LLC and may not be used in any way without their permission.

COPYRIGHT 2018

ROME TENNIS - INDOOR COURTS

Rome, Georgia

DRAWN BY	CHECKED BY
BCE	BCE

DATE
2019-02-15

REVISIONS	
NUMBER	DATE

TITLE
FLOOR PLAN - POWER

PROJECT NUMBER
201811

SHEET NUMBER
E2-1.0

75% CONSTRUCTION DOCUMENTS 2/15/2019

LIGHTING NOTES

GENERAL NOTES:

A. PROVIDE UNSWITCHED CONDUCTOR FOR EMERGENCY LIGHTING UNITS AND EXIT SIGNS, TYPICAL.

B. LIGHTING LAYOUT AND FIXTURE QUANTITIES SHOWN ON THIS DRAWING ARE BASED ON MUSCO LIGHTING FIXTURES AND PHOTOMETRICS. TENNIS COURT LIGHTING VENDORS SHALL SUBMIT LUMINAIRE QUANTITIES AND LOCATIONS BASED ON THEIR SPECIFIC FIXTURE PERFORMANCE. VENDORS MUST ALSO DESIGN AND PROVIDE A SYSTEM CAPABLE OF PERFORMING TO MEET REQUIREMENTS OF THE ILLUMINATING ENGINEERING SOCIETY OF NORTH AMERICA, FOR A CLASS II INDOOR TENNIS FACILITY. LIGHTING FOR INDOOR TENNIS SHALL BE GLARE FREE, FLICKER-FREE DIMMING, AND PROVIDE VISIBILITY OF THE BALL FOR PLAYERS AND SPECTATORS FROM THE TIME IT IS TOSSED IN THE AIR BY THE SERVER ALONG EVERY PATH IT FOLLOWS, AS LONG AS THE BALL IS IN PLAY. REFER TO ELECTRICAL SPECIFICATIONS FOR MORE INFORMATION. THE BASIS OF DESIGN PHOTOMETRICS ARE SHOWN ON SHEET E3-1.1

ILLUMINATION LEVELS (MEASURED AT 3'-0" AFF):

- MAINTAINED AVERAGE ILLUMINATION - 75 FC
- MAINTAINED MINIMUM HORIZONTAL ILLUMINANCE - 100 FC
- UNIFORMITY RATIO (MAX./MIN.) SHALL BE BETWEEN 1.5 TO 1.7.
- MAINTAIN LESS THAN 10% GRADIENT BETWEEN POINTS OF MEASUREMENT.

ILLUMINATION AND MAX/MUM RATIO APPLY TO PRIMARY PLAYING AREA (PPA). ILLUMINATION OF THE AREA BEYOND THE PPA SHALL NOT BE BELOW 70% OF THE AVERAGE ILLUMINATION OF THE PPA.

C. VENDORS SHALL OBTAIN ARCHITECTURAL INFORMATION FROM WITHIN CONSTRUCTION DOCUMENTATION. STRUCTURAL INFORMATION SHALL BE OBTAINED FROM THE STRUCTURAL STEEL DESIGNER/FABRICATOR AND STRUCTURAL COMPONENTS SHALL BE INCORPORATED INTO LIGHTING STUDY MODELS. ALL DESIGN PARAMETERS SHALL BE PACKAGED WITH SUBMITTAL DATA AND A COLOR RENDERING SHALL ALSO BE INCLUDED. FINISH COLORS AND REFLECTANCE VALUES SHALL BE OBTAINED FROM THE ARCHITECTURAL DRAWINGS.

D. INSTALLATION OF TENNIS LUMINAIRES MUST BE COORDINATED WITH OTHER TRADES, PRIOR TO CREATION OF SHOP DRAWINGS. CONTRACTOR IS RESPONSIBLE FOR ENSURING THAT SUCH COORDINATION HAS TAKEN PLACE, PRIOR TO SHOP DRAWING REVIEW BY THE DESIGN TEAM.

E. TENNIS COURT LIGHTING SHALL BE SUSPENDED FROM STRUCTURAL COMPONENTS ABOVE. IF REQUIRED, CONTRACTOR SHALL INSTALL ADDITIONAL SUPPORTING MEANS IN ORDER TO HANG LUMINAIRES IN LOCATIONS DETERMINED BY THE VENDOR. SUPPORTING MEANS SHALL BE APPROVED BY THE STRUCTURAL DESIGNER/FABRICATOR. COORDINATION DRAWINGS SHALL INDICATE METHOD BY WHICH LUMINAIRES ARE SUPPORTED.

F. PROVIDE A COMPLETE SPORTS LIGHTING EQUIPMENT PACKAGE INCLUDING LIGHTING DESIGN, FIXTURES, DRIVERS, CONTACTORS, AND CONTROLS.

G. PROVIDE AIR MESH DIMMING AND WIRELESS CONTROLS FOR TENNIS COURT LIGHTING CONSISTING OF CONTROL STATION WITH TIME BASED CONTROL, SWITCH STATION FOR ON/OFF CONTROL (BY DOUBLE COURTS), PROGRAMMING, TRAINING, AND ALL OTHER COMPONENTS FOR A COMPLETE SYSTEM. REFER TO CONTROL INTENT ON E9-3.1 FOR MORE INFORMATION.

KEYED NOTES:

1. PROVIDE CENTRAL BASE STATION FOR WIRELESS CONTROL OF TENNIS COURT LIGHTING. BASIS OF DESIGN: SYNAPSE SIMPLYSNAP WITH OPTIONAL PRE-CONFIGURED 5 BUTTON SWITCH FOR WIRELESS PUSHBUTTON LIGHTING CONTROL.

2. PROVIDE WALL CONTROL STATION FOR ON/OFF OF TENNIS COURT LIGHTS. BASIS OF DESIGN: SYNAPSE WIRELESS SWITCH WITH 8 BUTTONS.

3. PROVIDE LIGHTING INVERTER "INV-1" FOR SELECT EXTERIOR EMERGENCY FIXTURES; MYERS POWER ILLUMINATOR SERIES LV-2 OR APPROVED EQUAL; SINGLE PHASE, 277V INPUT/277V OUTPUT, 350VA/W, NFPA 101 SELF TESTING AND DATA LOGGING, UL 924 LISTED, BATTERIES 90 MINUTES AT FULL LOAD. MOUNT ABOVE LIGHTING PANEL LI1.

4. PROVIDE LIGHTING INVERTER "INV-2" FOR SELECT EXTERIOR EMERGENCY FIXTURES; MYERS POWER ILLUMINATOR SERIES LV-2 OR APPROVED EQUAL; SINGLE PHASE, 277V INPUT/277V OUTPUT, 350VA/W, NFPA 101 SELF TESTING AND DATA LOGGING, UL 924 LISTED, BATTERIES 90 MINUTES AT FULL LOAD. MOUNT ABOVE LIGHTING PANEL LI2.

5. EXTERNALLY MOUNTED COURT LIGHTING DRIVERS (IF REQUIRED).

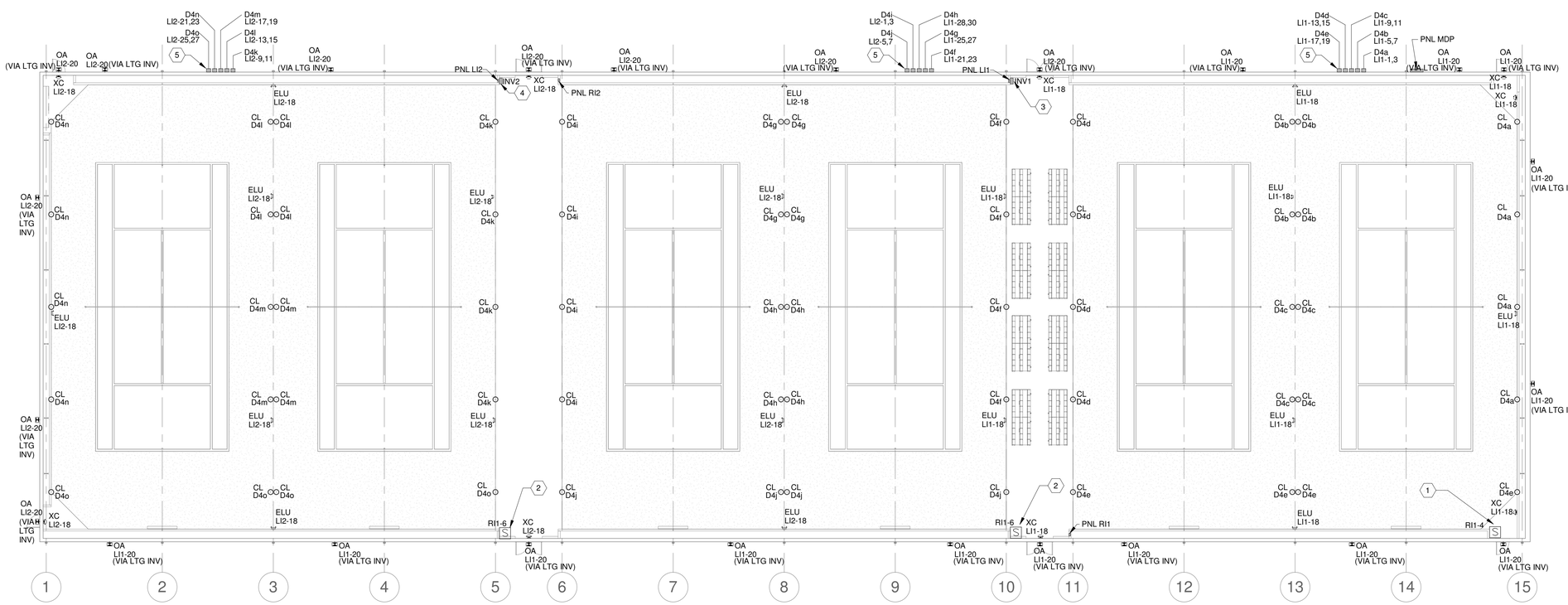

1 FLOOR PLAN - LIGHTING
1/16" = 1'-0"

0' 2' 4' 8' 16' 32'

BCE
BARNETT CONSULTING ENGINEERS
655 Engineering Drive
Suite 150
Peachtree Corners, GA 30092
404.382.9550
www.bce-eng.com

Menefee Architecture | Architecture Planning Design
1075 Brady Ave NW Atlanta GA 30318 | t 404.876.1011

COPYRIGHT

This drawing and all reproductions are copyrighted and the property of Menefee Architecture LLC and may not be used in any way without their permission.

COPYRIGHT 2018

ROME TENNIS - INDOOR COURTS

Rome, Georgia

DRAWN BY	CHECKED BY
BCE	BCE

DATE
2019-02-15

REVISIONS	
NUMBER	DATE

TITLE
FLOOR PLAN - LIGHTING

PROJECT NUMBER
201811

SHEET NUMBER
E3-1.0

75% CONSTRUCTION DOCUMENTS 2/15/2019

EQUIPMENT LIST FOR AREAS SHOWN

Pole				Luminaires				
QTY	LOCATION	SIZE	GRADE ELEVATION	MOUNTING HEIGHT	LUMINAIRE TYPE	QTY / POLE	THIS GRID	OTHER GRIDS
12	T1, T5, T11 T15-T16 T20, T26 T30-T31 T35, T41 T45		15'	15'	TLC-LED-1150	1	1	0
12	T14, T17 T19, T27 T2, T4, T12 T29, T32 T34, T42 T44		20'	20'	TLC-LED-1150	1	1	0
6	T18, T28 T3, T13 T33, T43		25'	25'	TLC-LED-1150	1	1	0
6	T21, T25 T36, T40 T6, T10		15'	15'	TLC-LED-1150	1/1*	2	0
6	T24, T37 T39 T7, T9, T22		20'	20'	TLC-LED-1150	1/1*	2	0
3	T38 T8, T23		25'	25'	TLC-LED-1150	1/1*	2	0
45	TOTALS					60	60	0

* This structure utilizes a back-to-back mounting configuration

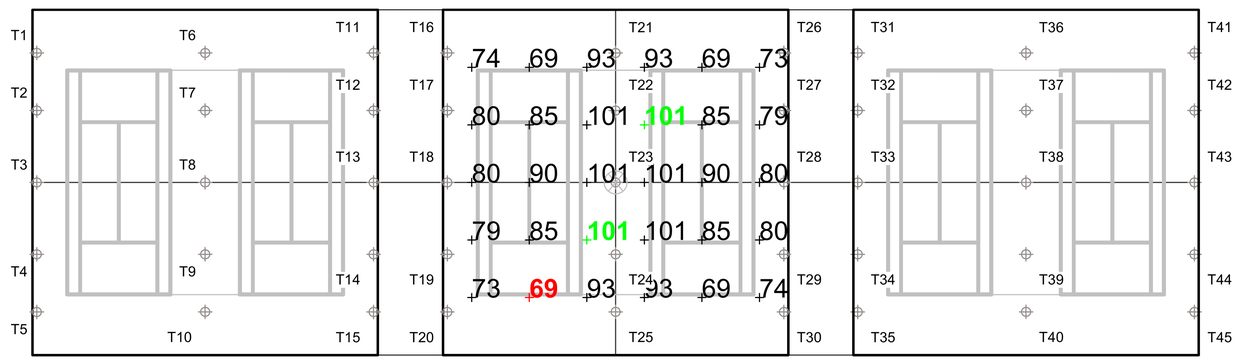

NOTES: Assumed Reflectances:
Ceiling: 60%
Walls: 40%
Floor: 20%

SCALE IN FEET 1 : 40
0' 40' 80'

ENGINEERED DESIGN By: • File #184847 • 20-Aug-18

Pole location(s) + dimensions are relative to 0,0 reference point(s) ⊗

The Tennis Center Of Georgia Indoor Facility
Rome,GA

GRID SUMMARY

Name:	**Tennis 3-4**
Size:	2 Court - 24' Spacing
Spacing:	20.0' x 20.0'
Height:	3.0' above grade

ILLUMINATION SUMMARY

MAINTAINED HORIZONTAL FOOTCANDLES

	Entire Grid
Guaranteed Average:	**75**
Scan Average:	84.79
Maximum:	101
Minimum:	69
Avg / Min:	1.23
Guaranteed Max / Min:	**1.6**
Max / Min:	1.46
UG (adjacent pts):	0.00
CU:	0.00
No. of Points:	30

LUMINAIRE INFORMATION

Color / CRI:	5700K - 75 CRI
Luminaire Output:	121,000 lumens
No. of Luminaires:	**60**
Total Load:	69.0 kW

Lumen Maintenance

Luminaire Type	L90 hrs	L80 hrs	L70 hrs
TLC-LED-1150	>81,000	>81,000	>81,000

Reported per TM-21-11. See luminaire datasheet for details.

Guaranteed Performance: The ILLUMINATION described above is guaranteed per your Musco Warranty document and includes a 0.95 dirt depreciation factor.

Field Measurements: Individual field measurements may vary from computer-calculated predictions and should be taken in accordance with IESNA RP-6-15.

Electrical System Requirements: Refer to Amperage Draw Chart and/or the **"Musco Control System Summary"** for electrical sizing.

Installation Requirements: Results assume ± 3% nominal voltage at line side of the driver and structures located within 3 feet (1m) of design locations.

We Make It Happen.

Not to be reproduced in whole or part without the written consent of Musco Sports Lighting, LLC. ©1981, 2018 Musco Sports Lighting, LLC.

ILLUMINATION SUMMARY

Menefee Architecture | Architecture Planning Design
1075 Brady Ave NW Atlanta GA 30318 | t 404.876.1011

COPYRIGHT
This drawing and all reproductions are copyrighted and the property of Menefee Architecture LLC and may not be used in any way without their permission.
COPYRIGHT 2018

ROME TENNIS - INDOOR COURTS
Rome, Georgia

DRAWN BY	CHECKED BY
BCE	BCE

DATE
2019-02-15

REVISIONS	
NUMBER	DATE

TITLE
SPORTS LIGHTING PHOTOMETRICS

PROJECT NUMBER
201811

SHEET NUMBER
E3-1.1

BCE
BARNETT CONSULTING ENGINEERS
655 Engineering Drive
Suite 150
Peachtree Corners, GA 30092
404.382.9550
www.bce-eng.com

75% CONSTRUCTION DOCUMENTS 2/15/2019

FIRE ALARM NOTES

GENERAL NOTES:

A. COORDINATE EXACT LOCATION APPLIANCES WITH ARCHITECT, TYPICAL.

B. PROVIDE FIRE ALARM INTERFACE TO RELEASE DOORS UPON FIRE ALARM CONDITION. MOUNT FIRE ALARM INTERFACE DEVICE ABOVE NEAREST ACCESSIBLE CEILING.

C. FIRE ALARM CONTROL PANEL. COMPLY WITH NFPA 72, NATIONAL FIRE ALARM AND SIGNALING CODE, 2013 EDITION, CHAPTER 10 - REFERENCE PARAGRAPHS 10.6.5.2.2, 10.6.5.2.3, 10.6.5.2.4, 10.6.5.4 - DEDICATED BRANCH CIRCUIT SHALL BE PERMANENTLY IDENTIFIED AS TO ITS PURPOSE, HAVE A RED MARKING THAT DOES NOT DAMAGE THE OVERCURRENT PROTECTIVE DEVICE OR OBSCURE THE MANUFACTURER'S MARKINGS, AND SHALL BE HAVE A LISTED BREAKER LOCKING DEVICE INSTALLED. REFERENCE PARAGRAPH 10.6.5.2.1 - LOCATION OF THE CIRCUIT DISCONNECTING MEANS SHALL BE PERMANENTLY LABELED ON THE FIRE ALARM CONTROL UNIT. COMPLY WITH PARAGRAPH 10.6.10.1.2 - BATTERIES SHALL BE PERMANENTLY MARKED WITH THE MONTH AND YEAR OF MANUFACTURE.

D. WALL MOUNTED APPLIANCES SHALL BE MOUNTED SUCH THAT THE ENTIRE LENS IS NOT LESS THAN 80 INCHES AND NOT GREATER THAN 96 INCHES ABOVE THE FINISHED FLOOR. TYPICAL FOR ALL LOCATIONS.

E. PROVIDE KNOX BOX WITH TAMPER SWITCH OUTSIDE ENTRY INDICATED BY ARCHITECT.

F. ALL WALL MOUNTED DEVICES IN THE COURT AREA SHALL BE EXTENDED FROM THE WALL SO THAT THEY ARE ACCESSIBLE BEYOND THE EDGE OF THE WALL PADDING. COORDINATE WITH ARCHITECT PRIOR TO INSTALLATION.

G. NOTIFY THE STATE FIRE MARSHAL'S OFFICE, VIA SFM FORM 354A, AT LEAST 30 WORKING DAYS PRIOR TO BEGINNING OF INSTALLATION OF FIRE ALARM SYSTEM (INCLUDING ROUGH-IN), AND SUBMIT THREE COPIES OF COMPLETE INFORAMTION REGARDING SYSTEM, IN COMPLIANCE WITH NFPA 72, NATIONAL FIRE ALARM SIGNALING CODE, 2013 EDITION, CHAPTERS 7 AND 10.

H. PROVIDE A DOCUMENTATION CABINET AT THE SYSTEM CONTROL UNIT OR ANOTHER APPROVED LOCATION AT THE PROTECTED PREMISES. THE DOCUMENTATION CABINET SHALL BE PROMINENTLY LABELED "SYSTEM RECORD DOCUMENTATION" WHERE THE DOCUMENTATION CABINET IS NOT IN THE SAME ROOM AS THE SYSTEM CONTROL UNIT, ITS LOCATION SHALL BE INDENTIFIED AT THE SYSTEM CONTROL UNIT.

I. PROVIDE WIRE GUARDS ON NOTIFICATION APPLIANCES FOR PROTECTION AGAINST TENNIS BALLS.

KEYNOTES:

1. FIRE ALARM CONTROL PANEL. PROVIDE LABEL ON PANEL IDENTIFYING CIRCUIT FED FROM INFORMATION PER NFPA 72, 2013 EDITION, CHAPTER 10, PARAGRAPH 10.6.5.2.1.
2. PROVIDE RECESSED REMOTE ANNUNCIATOR PANEL. MOUNT AT 5'-0" (CENTER LINE) ABOVE FINISHED FLOOR.
3. PROVIDE MONITOR MODULES FOR THE TAMPER SWITCHES LOCATED IN THE BFP VAULT. EXTEND AND CONNECT TO POST INDICATOR VALVE. COORDINATE WITH CIVIL.
4. PROVIDE MONITOR MODULE FOR THE TAMPER SWITCH FOR THE BUILDING ISOLOATION VALVE. FIELD COORDINATE EXACT LOCATION FOR EQUIPMENT FURNISHED UNDER ANOTHER DIVISION OF WORK FOR MONITORING BY FIRE ALARM SYSTEM. CONNECT TO VALVE TAMPER SWITCH. REFER TO FIRE PROTECTION SHOP DRAWINGS FOR EXACT LOCATIONS AND QUANTITIES.
5. FIELD COORDINATE EXACT LOCATION FOR EQUIPMENT FURNISHED UNDER ANOTHER DIVISION OF WORK FOR SPRINKLER SYSTEM MONITORING BY FIRE ALARM SYSTEM. CONNECT TO VALVE TAMPER AND FLOW SWITCHES. REFER TO FIRE PROTECTION SHOP DRAWINGS FOR EXACT LOCATIONS AND QUANTITIES OF ALL FLOW AND TAMPER SWITCHES.
6. PROVIDE FIRE ALARM CONTROL MODULE TO SHUT DOWN CEILING FAN UNIT UNDER FIRE ALARM CONDITION. FIRE ALARM RELAY PROVIDED WITH FAN.

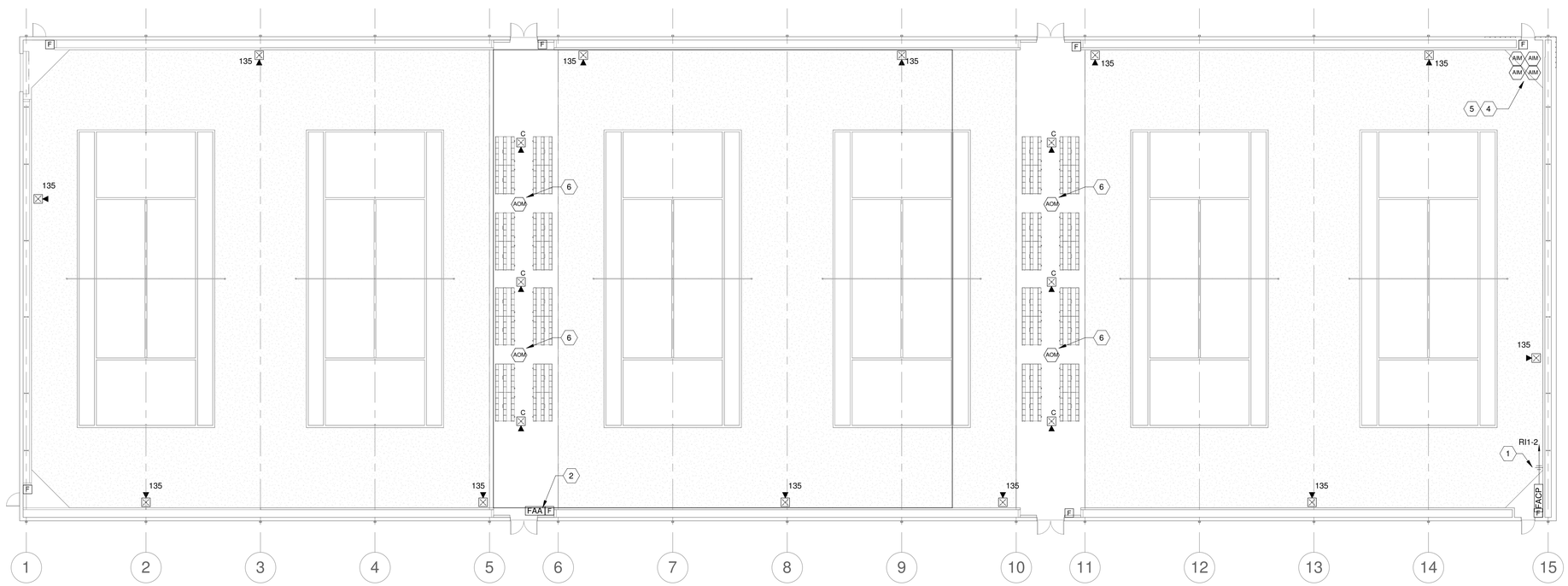

1 FLOOR PLAN - FIRE ALARM
1/16" = 1'-0"

0' 2' 4' 8' 16' 32'

BCE
BARNETT CONSULTING ENGINEERS
655 Engineering Drive
Suite 150
Peachtree Corners, GA 30092
404.382.9550
www.bce-eng.com

Menefee Architecture | Architecture Planning Design
1075 Brady Ave NW Atlanta GA 30318 | t 404.876.1011

COPYRIGHT

This drawing and all reproductions are copyrighted and the property of Menefee Architecture LLC and may not be used in any way without their permission.

COPYRIGHT 2018

ROME TENNIS - INDOOR COURTS
Rome, Georgia

DRAWN BY	CHECKED BY
BCE	BCE

DATE
2019-02-15

REVISIONS	
NUMBER	DATE

TITLE
FLOOR PLAN - FIRE ALARM

PROJECT NUMBER
201811

SHEET NUMBER
E4-1.0

75% CONSTRUCTION DOCUMENTS 2/15/2019

PANELBOARD "MDP"

NOTES	ACCESSORIES		
1	1	RATING:	600 A MCB
2	2	VOLTAGE:	480/277 Wye 3P 4W
3	3	SCCR:	42,000 AIC
4	4	ENCLOSURE:	NEMA 3R - Surface
5	5	LOCATION:	
		FED FROM:	

#	DESCRIPTION	CONDUIT	NOTE	AMP	POL	A (kVA)	B (kVA)	C (kVA)	POL	AMP	NOTE	CONDUIT	DESCRIPTION	#
1						31.9 / 32.0								2
3	PANELS LI1 & LI2	3-#4/0, 1-#4/0, 1-#4(CU) - 2.50"		225 A	3		28.8 / 32.0		3	150 A		3-#2/0, 1-#4(CU) - 2.00"	GRTU-1	4
5								26.4 / 32.0						6
7						4.3 / 2.9								8
9	TRANSFORMER TR1	3-#4, 1-#10(CU) - 1.00"		60 A	3		4.5 / 3.5		3	60 A		3-#4, 1-#10(CU) - 1.00"	TRANSFORMER TR2	10
11								2.3 / 1.8						12
13						0.0 / 0.0								14
15	SPARE	--	--	150 A	3		0.0 / 0.0		3	100 A	--	--	SPARE	16
17								0.0 / 0.0						18
19		() -										() -		20
21		() -										() -		22
23		() -										() -		24
25		() -										() -		26
27		() -										() -		28
29		() -										() -		30
31		() -										() -		32
33		() -										() -		34
35		() -										() -		36
37		() -										() -		38
39		() -										() -		40
41		() -										() -		42
					TOTAL (kVA):	71.1	68.8	62.5						

LOAD CLASSIFICATION	CONNECTED LOAD	DEMAND FACTOR	DESIGN LOAD
HVAC	104.32 kVA	100.00%	104.32 kVA
Other	0.98 kVA	100.00%	0.98 kVA
POWR	1.35 kVA	100.00%	1.35 kVA
REC	8.54 kVA	100.00%	8.54 kVA
Lighting	87.15 kVA	100.00%	87.15 kVA

PANEL TOTALS	
TOTAL CONNECTED LOAD:	202.34 kVA
CONNECTED CURRENT:	243 A
TOTAL DEMAND LOAD:	202.34 kVA
TOTAL DEMAND CURRENT:	243 A

"LI1"

NOTES	ACCESSORIES		
1	1 COLUMN WIDTH PANELBOARD.	RATING:	225 A MLO
2	2 INTEGRAL SPD.	VOLTAGE:	480/277 Wye 3P 4W
3	3 FEED THROUGH LUGS TO PANELBOARD LI2.	SCCR:	42,000 AIC
4	4	ENCLOSURE:	Type 1 - Recessed
5	5	LOCATION:	
		FED FROM:	MDP

#	DESCRIPTION	CONDUIT	NOTE	AMP	POL	A (kVA)	B (kVA)	C (kVA)	POL	AMP	NOTE	CONDUIT	DESCRIPTION	#
1						2.9 / 2.9								2
3	COURT LIGHTING DRIVER - D4a	2-#12, 1-#12(CU) - 0.75"		20 A	2		2.9 / 2.9		2	20 A		2-#12, 1-#12(CU) - 0.75"	COURT LIGHTING DRIVER - D4f	4
5								2.9 / 2.9						6
7	COURT LIGHTING DRIVER - D4b	2-#12, 1-#12(CU) - 0.75"		20 A	2	2.9 / 2.9			2	20 A		2-#12, 1-#12(CU) - 0.75"	COURT LIGHTING DRIVER - D4g	8
9							2.9 / 2.9							10
11	COURT LIGHTING DRIVER - D4c	2-#12, 1-#12(CU) - 0.75"		20 A	2			2.9 / 2.9	2	20 A		2-#12, 1-#12(CU) - 0.75"	COURT LIGHTING DRIVER - D4h	12
13						2.9 / 0.0								14
15	COURT LIGHTING DRIVER - D4d	2-#12, 1-#12(CU) - 0.75"		20 A	2		2.9 / 0.0		2	20 A	--	--	SPARE	16
17								2.9 / 0.2	1	20 A		1-#12, 1-#12, 1-#12(CU) - 0.75"	LTG - EXITS, ELU'S	18
19	COURT LIGHTING DRIVER - D4e	2-#12, 1-#12(CU) - 0.75"		20 A	2	2.9 / 0.1			1	20 A		1-#12, 1-#12, 1-#12(CU) - 0.75"	EXTERIOR LIGHTING (VIA LTG INV)	20
21							0.0 / 0.0		1	20 A	--	--	SPARE	22
23	SPARE	--	--	20 A	2			0.0 / 0.0	1	20 A	--	--	SPARE	24
25						0.0 / 0.0			1	20 A	--	--	SPARE	26
27	SPARE	--	--	20 A	2		0.0 / 0.0		1	20 A	--	--	SPARE	28
29	SPARE	--	--	20 A	1			0.0 / 0.0	1	20 A	--	--	SPARE	30
					TOTAL (kVA):	17.4	14.4	14.6						

LOAD CLASSIFICATION	CONNECTED LOAD	DEMAND FACTOR	DESIGN LOAD
Lighting	46.42 kVA	100.00%	46.42 kVA

PANEL TOTALS	
TOTAL CONNECTED LOAD:	46.42 kVA
CONNECTED CURRENT:	56 A
TOTAL DEMAND LOAD:	46.42 kVA
TOTAL DEMAND CURRENT:	56 A

"LI2"

NOTES	ACCESSORIES		
1	1 COLUMN WIDTH PANELBOARD.	RATING:	225 A MLO
2	2 INTEGRAL SPD.	VOLTAGE:	480/277 Wye 3P 4W
3	3	SCCR:	42,000 AIC
4	4	ENCLOSURE:	Type 1 - Recessed
5	5	LOCATION:	
		FED FROM:	MDP

#	DESCRIPTION	CONDUIT	NOTE	AMP	POL	A (kVA)	B (kVA)	C (kVA)	POL	AMP	NOTE	CONDUIT	DESCRIPTION	#
1						2.9 / 2.9								2
3	COURT LIGHTING DRIVER - D4i	2-#12, 1-#12(CU) - 0.75"		20 A	2		2.9 / 2.9		2	20 A		2-#12, 1-#12(CU) - 0.75"	COURT LIGHTING DRIVER - D4m	4
5								2.9 / 2.9						6
7	COURT LIGHTING DRIVER - D4j	2-#12, 1-#12(CU) - 0.75"		20 A	2	2.9 / 2.9			2	20 A		2-#12, 1-#12(CU) - 0.75"	COURT LIGHTING DRIVER - D4n	8
9							2.9 / 2.9							10
11	COURT LIGHTING DRIVER - D4k	2-#12, 1-#12(CU) - 0.75"		20 A	2			2.9 / 2.9	2	20 A		2-#12, 1-#12(CU) - 0.75"	COURT LIGHTING DRIVER - D4o	12
13						2.9 / 0.0								14
15	COURT LIGHTING DRIVER - D4l	2-#12, 1-#12(CU) - 0.75"		20 A	2		2.9 / 0.0		2	20 A	--	--	SPARE	16
17								0.0 / 0.3	1	20 A		1-#12, 1-#12, 1-#12(CU) - 0.75"	LTG - EXITS, ELU'S	18
19	SPARE	--	--	20 A	2	0.0 / 0.1			1	20 A		1-#12, 1-#12, 1-#12(CU) - 0.75"	EXTERIOR LIGHITNG (VIA LTG INV)	20
21							0.0 / 0.0		1	20 A	--	--	SPARE	22
23	SPARE	--	--	20 A	2			0.0 / 0.0	1	20 A	--	--	SPARE	24
25						0.0 / 0.0			1	20 A	--	--	SPARE	26
27	SPARE	--	--	20 A	2		0.0 / 0.0		1	20 A	--	--	SPARE	28
29	SPARE	--	--	20 A	1			0.0 / 0.0	1	20 A	--	--	SPARE	30
					TOTAL (kVA):	14.5	14.4	11.8						

LOAD CLASSIFICATION	CONNECTED LOAD	DEMAND FACTOR	DESIGN LOAD
Lighting	40.73 kVA	100.00%	40.73 kVA

PANEL TOTALS	
TOTAL CONNECTED LOAD:	40.73 kVA
CONNECTED CURRENT:	49 A
TOTAL DEMAND LOAD:	40.73 kVA
TOTAL DEMAND CURRENT:	49 A

BCE
BARNETT CONSULTING ENGINEERS
655 Engineering Drive
Suite 150
Peachtree Corners, GA 30092
404.382.9550
www.bce-eng.com

Menefee Architecture | Architecture Planning Design
1075 Brady Ave NW Atlanta GA 30318 | t 404.876.1011

COPYRIGHT

This drawing and all reproductions are copyrighted and the property of Menefee Architecture LLC and may not be used in any way without their permission.

COPYRIGHT 2018

ROME TENNIS - INDOOR COURTS
Rome, Georgia

DRAWN BY	CHECKED BY
BCE	BCE

DATE
2019-02-15

REVISIONS	
NUMBER	DATE

TITLE
PANEL SCHEDULES

PROJECT NUMBER
201811

SHEET NUMBER
E9-0.1

75% CONSTRUCTION DOCUMENTS 2/15/2019

PANELBOARD "RI1"

NOTES	ACCESSORIES		
1	1	COLUMN WIDTH PANELBOARD.	RATING: 110 A MCB
2	2	INTEGRAL SPD.	VOLTAGE: 120/208 Wye 3P 4W
3	3		SCCR: 10,000 AIC
4	4		ENCLOSURE: Type 1 - Recessed
5	5		LOCATION:
			FED FROM: TR1

#	DESCRIPTION	CONDUIT	NOTE	AMP	POL	A (kVA)	B (kVA)	C (kVA)	POL	AMP	NOTE	CONDUIT	DESCRIPTION	#
1	ADA DOOR OPERATOR	1-#10, 1-#10, 1-#10(CU) - 0.75"		20 A	1	0.5 / 0.4			1	20 A		1-#12, 1-#12, 1-#12(CU) - 0.75"	FIRE ALARM CONTROL PANEL	2
3	REC - CONVENIENCE	1-#10, 1-#10, 1-#10(CU) - 0.75"		20 A	1		0.4 / 1.0		1	20 A		1-#10, 1-#10, 1-#10(CU) - 0.75"	COURT LTG CENTRAL BASE...	4
5	ADA DOOR OPERATOR	1-#12, 1-#12, 1-#12(CU) - 0.75"		20 A	1			0.5 / 0.0	1	20 A		1-#12, 1-#12, 1-#12(CU) - 0.75"	COURT LTG WIRELESS SWITCHES	6
7	SECURITY CONTROL PANEL	1-#12, 1-#12, 1-#12(CU) - 0.75"		20 A	1	1.0 / 0.0			1	20 A	--	--	SPARE	8
9	REC - CONVENIENCE	1-#12, 1-#12, 1-#12(CU) - 0.75"		20 A	1		0.4 / 1.0		2	20 A		2-#12, 1-#12(CU) - 0.75"	CEILING FAN CF-3	10
11	REC - CONVENIENCE	1-#12, 1-#12, 1-#12(CU) - 0.75"		20 A	1			0.2 / 1.0						12
13	LOW VOLTAGE EQUIP CAB	1-#12, 1-#12, 1-#12(CU) - 0.75"		20 A	1	1.0 / 1.0			2	20 A		2-#12, 1-#12(CU) - 0.75"	CEILING FAN CF-4	14
15	REC - CONVENIENCE	1-#12, 1-#12, 1-#12(CU) - 0.75"		20 A	1		0.4 / 1.0							16
17	SPARE	--	--	20 A	1			0.0 / 0.0	1	20 A	--	--	SPARE	18
19	SPARE	--	--	20 A	1	0.0 / 0.0			1	20 A	--	--	SPARE	20
21	SPARE	--	--	20 A	1		0.0 / 0.0		1	20 A	--	--	SPARE	22
23	EXTERIOR REC	1-#12, 1-#12, 1-#12(CU) - 0.75"		20 A	1			0.2 / 0.0	1	20 A	--	--	SPARE	24
25	EXTERIOR REC	1-#12, 1-#12, 1-#12(CU) - 0.75"		20 A	1	0.4 / 0.0			1	20 A	--	--	SPARE	26
27	EXTERIOR REC	1-#12, 1-#12, 1-#12(CU) - 0.75"		20 A	1		0.4 / 0.0		1	20 A	--	--	SPARE	28
29	EXTERIOR REC	1-#10, 1-#10, 1-#10(CU) - 0.75"		20 A	1			0.4 / 0.0	1	20 A	--	--	SPARE	30
31	SPACE	--	--	--	--	0.0 / 0.0			1	20 A	--	--	SPARE	32
33	SPACE	--	--	--	--		0.0 / 0.0		1	20 A	--	--	SPARE	34
35	SPACE	--	--	--	--			0.0 / 0.0	1	20 A	--	--	SPARE	36
37	SPACE	--	--	--	--	0.0 / 0.0			1	20 A	--	--	SPARE	38
39	SPACE	--	--	--	--		0.0 / 0.0		1	20 A	--	--	SPARE	40
41	SPACE	--	--	--	--			0.0 / 0.0	1	20 A	--	--	SPARE	42
					TOTAL (kVA):	4.3	4.5	2.3						

LOAD CLASSIFICATION	CONNECTED LOAD	DEMAND FACTOR	DESIGN LOAD
HVAC	4.16 kVA	100.00%	4.16 kVA
Other	0.98 kVA	100.00%	0.98 kVA
POWR	1.35 kVA	100.00%	1.35 kVA
REC	4.52 kVA	100.00%	4.52 kVA

PANEL TOTALS	
TOTAL CONNECTED LOAD:	11.01 kVA
CONNECTED CURRENT:	31 A
TOTAL DEMAND LOAD:	11.01 kVA
TOTAL DEMAND CURRENT:	31 A

PANELBOARD "RI2"

NOTES	ACCESSORIES		
1	1	COLUMN WIDTH PANELBOARD	RATING: 110 A MCB
2	2	INTEGRAL SPD.	VOLTAGE: 120/208 Wye 3P 4W
3	3		SCCR: 10,000 AIC
4	4		ENCLOSURE: Type 1 - Recessed
5	5		LOCATION:
			FED FROM: TR2

#	DESCRIPTION	CONDUIT	NOTE	AMP	POL	A (kVA)	B (kVA)	C (kVA)	POL	AMP	NOTE	CONDUIT	DESCRIPTION	#
1	SCOREBOARD	1-#12, 1-#12, 1-#12(CU) - 0.75"		20 A	1	0.3 / 0.3			1	20 A		1-#12, 1-#12, 1-#12(CU) - 0.75"	SCOREBOARD	2
3	REC - CONVENIENCE	1-#12, 1-#12, 1-#12(CU) - 0.75"		20 A	1		0.4 / 0.0		1	20 A	--	--	SPARE	4
5	REC - CONVENIENCE	1-#12, 1-#12, 1-#12(CU) - 0.75"		20 A	1			0.2 / 0.0	1	20 A	--	--	SPARE	6
7	SCOREBOARD	1-#12, 1-#12, 1-#12(CU) - 0.75"		20 A	1	0.3 / 0.3			1	20 A		1-#12, 1-#12, 1-#12(CU) - 0.75"	SCOREBOARD	8
9	REC - CONVENIENCE	1-#12, 1-#12, 1-#12(CU) - 0.75"		20 A	1		0.4 / 1.0		2	20 A		2-#12, 1-#12(CU) - 0.75"	CEILING FAN CF-1	10
11	REC - CONVENIENCE	1-#12, 1-#12, 1-#12(CU) - 0.75"		20 A	1			0.2 / 1.0						12
13	SCOREBOARD	1-#12, 1-#12, 1-#12(CU) - 0.75"		20 A	1	0.3 / 1.0			2	20 A		2-#12, 1-#12(CU) - 0.75"	CEILING FAN CF-2	14
15	REC - CONVENIENCE	1-#10, 1-#10, 1-#10(CU) - 0.75"		20 A	1		0.4 / 1.0							16
17	SPARE	--	--	20 A	1			0.0 / 0.0	1	20 A	--	--	SPARE	18
19	SCOREBOARD	1-#12, 1-#12, 1-#12(CU) - 0.75"		20 A	1	0.3 / 0.0			1	20 A	--	--	SPARE	20
21	SPARE	--	--	20 A	1		0.0 / 0.0		1	20 A	--	--	SPARE	22
23	EXERIOR REC	1-#12, 1-#12, 1-#12(CU) - 0.75"		20 A	1			0.2 / 0.0	1	20 A	--	--	SPARE	24
25	EXTERIOR REC	1-#12, 1-#12, 1-#12(CU) - 0.75"		20 A	1	0.4 / 0.0			1	20 A	--	--	SPARE	26
27	EXTERIOR REC	1-#12, 1-#12, 1-#12(CU) - 0.75"		20 A	1		0.4 / 0.0		1	20 A	--	--	SPARE	28
29	EXTERIOR REC	1-#12, 1-#12, 1-#12(CU) - 0.75"		20 A	1			0.2 / 0.0	1	20 A	--	--	SPARE	30
31	SPACE	--	--	--	--	0.0 / 0.0			--	--	--	--	SPACE	32
33	SPACE	--	--	--	--		0.0 / 0.0		--	--	--	--	SPACE	34
35	SPACE	--	--	--	--			0.0 / 0.0	--	--	--	--	SPACE	36
37	SPACE	--	--	--	--	0.0 / 0.0			--	--	--	--	SPACE	38
39	SPACE	--	--	--	--		0.0 / 0.0		--	--	--	--	SPACE	40
41	SPACE	--	--	--	--			0.0 / 0.0	--	--	--	--	SPACE	42
					TOTAL (kVA):	2.9	3.5	1.8						

LOAD CLASSIFICATION	CONNECTED LOAD	DEMAND FACTOR	DESIGN LOAD
HVAC	4.16 kVA	100.00%	4.16 kVA
REC	4.02 kVA	100.00%	4.02 kVA

PANEL TOTALS	
TOTAL CONNECTED LOAD:	8.18 kVA
CONNECTED CURRENT:	23 A
TOTAL DEMAND LOAD:	8.18 kVA
TOTAL DEMAND CURRENT:	23 A

BCE
BARNETT CONSULTING ENGINEERS
655 Engineering Drive
Suite 150
Peachtree Corners, GA 30092
404.382.9550
www.bce-eng.com

Menefee Architecture | Architecture Planning Design
1075 Brady Ave NW Atlanta GA 30318 | t 404.876.1011

COPYRIGHT

This drawing and all reproductions are copyrighted and the property of Menefee Architecture LLC and may not be used in any way without their permission.

COPYRIGHT 2018

ROME TENNIS - INDOOR COURTS

Rome, Georgia

DRAWN BY	CHECKED BY
BCE	BCE

DATE
2019-02-15

REVISIONS	
NUMBER	DATE

TITLE
PANEL SCHEDULES

PROJECT NUMBER
201811

SHEET NUMBER
E9-0.2

75% CONSTRUCTION DOCUMENTS 2/15/2019

LUMINAIRE SCHEDULE

TYPE MARK/ ID	DESCRIPTION	VOLTAGE	POLES	LED	MOUNTING	BASIS OF DESIGN		ALTERNATE	NOTES
						MANUFACTURER	SERIES - MODEL	MANUFACTURERS	
CL	INDIRECT TENNIS COURT LIGHT; LED DIRECTIONAL; BLACK FINISH; PROVIDE HIGH LUMEN OUTPUT AND NEMA 2 OPTICS WITH EYELID; PROVIDE WITH ALL ACCESSORIES AND MOUNTING REQUIRED FOR A COMPLETE SYSTEM. PROVIDE WIRELESS CONTROLS WITH TIME BASED CONTROL AND LOCAL SWITCH STATIONS.	480 V		1440W LED; >121,000LM	PER VENDOR	MUSCO LIGHTS	TLC-LED-1150	BEST LIGHT, EPHESUS, LSI SPORTS LIGHT, METEOR. SEE NOTES ON E3-1.0 & E3-1.1	REFER TO PERFORMANCE SPECIFICATON FOR COURT LIGHTING REQUIREMENTS
ELU	LED STEEL HOUSING, EMERGENCY LIGHTING UNIT; PROVIDE FRONT MOUNTED HEADS WITH HIGH LUMEN OUTPUT; PROVIDE BLACK FINISH AND WIRE GUARD; PROVIDE WITH SELF DIAGNOSTICS AND MAINTENANCE FREE NICKEL-CADMIUM BATTERY.	277 V	1	15W LED; 1300LM	SURFACE	EMERGI-LITE	JS-HP 15W	SEE NOTES ON E3-1.0 & E3-1.1	
OA	ARCHITECTURAL WET LOCATION WALL PACK WITH INTEGRAL PHOTOCELL	277 V	1	18W	WALL	COOPER	CROSSTOUR XTOR		
XC	LED THERMOPLASTIC COMBINATION EXIT SIGN AND EMERGENCY LIGHTING UNIT WITH TWO ROUND HEADS; PROVIDE BLACK FINISH, RED LETTERS, AND WIRE GUARD; NO REMOTE HEADS; PROVIDE WITH SELF DIAGNOSTICS AND MAINTENANCE FREE NICKEL CADMIUM BATTERY. PROVIDE ARROW CONFIGURATION AS SHOWN ON DRAWINGS.	277 V	1	LED	WALL	EMERGI-LITE	ELXN400	SEE NOTES ON E3-1.0 & E3-1.1	

CONTROL INTENT SCHEDULE

TENNIS COURTS:

WIRELESS CONTROL BY THE SPORTS LIGHTING VENDOR PROVIDES TIME BASED CONTROL OF FIXTURES AS WELL AS MANUAL ON/OFF CONTROL.

CONTROL SEQUENCE OF OPERATION:
- SWITCHING BY RELAY ZONES (INDICATED ON DRAWINGS).
- TIME BASED FOR AUTO ON/AUTO OFF OF COURT LIGHTING VIA OWNER SCHEDULE
- WALL MOUNTED SWITCHES AT ENTRANCES PROVIDE MANUAL ON/OFF OF TENNIS LIGHTING.

EXTERIOR BUILDING MOUNTED LIGHTING:

INTEGRAL FIXTURE MOUNTED PHOTOCELL FOR INDIVIDUAL CONTROL OF FIXTURES

CONTROL SEQUENCE OF OPERATION:
- PHOTOCELL WILL TURN LIGHTS ON AND OFF.
- UPON LOSS OF NORMAL POWER, EMERGENCY EGRESS LIGHTING WILL TURN ON VIA LIGHTING INVERTER.

WALL SWITCH SCHEDULE

PROGRAMMING DIGITAL SWITCH -

TWO (2) SWITCH LOCATIONS

BUTTON - LABEL		FUNCTION
1	COURTS #1 & 2	ON / OFF
2	COURTS #3 & 4	ON / OFF
3	COURTS #5 & 6	ON / OFF
4	ALL ON	ON / OFF
5	ALL OFF	ON / OFF
6	SPARE	ON / OFF

BCE
BARNETT CONSULTING ENGINEERS
655 Engineering Drive
Suite 150
Peachtree Corners, GA 30092
404.382.9550
www.bce-eng.com

Menefee Architecture | Architecture Planning Design
1075 Brady Ave NW Atlanta GA 30318 | t 404.876.1011

COPYRIGHT

This drawing and all reproductions are copyrighted and the property of Menefee Architecture LLC and may not be used in any way without their permission.

COPYRIGHT 2018

ROME TENNIS - INDOOR COURTS

Rome, Georgia

DRAWN BY	CHECKED BY
BCE	BCE

DATE
2019-02-15

REVISIONS	
NUMBER	DATE

TITLE

SCHEDULES & DETAILS - LIGHTING

PROJECT NUMBER
201811

SHEET NUMBER
E9-3.1

75% CONSTRUCTION DOCUMENTS 2/15/2019

AUDIO VISUAL SYSTEMS

ROME TENNIS CENTER

ROME/FLOYD COUNTY

ROME, GEORGIA 30165

SUBMITTED ON: FEBRUARY 15, 2019

GENERAL NOTES:

A. ELECTRICAL CONTRACTOR TO INSTALL PULL STRINGS IN ALL CONDUIT.

B. ELECTRICAL CONTRACTOR TO TERMINATE ALL CONDUIT STUB-OUT AND SLEEVES WITH PLASTIC BUSHINGS.

C. NO MORE THAN THREE(3) QUARTER BENDS OR 200 DEGREES OF CONDUIT SHALL BE INSTALLED BETWEEN PULL BOXES.

D. GENERAL CONTRACTOR TO PROVIDE WALL BLOCKING AT ALL FLAT PANEL LOCATIONS.

ABBREVIATION LEGEND:

A. LAN - LOCAL AREA NETWORK
B. NET - FACILITY COMPUTER NETWORK
C. RJ45 - EIGHT POSITION MODULAR PLUG AND JACK UTILIZED FOR TWISTED-PAIR CABLE CONNECTIONS
D. SC - FIBER OPTIC CABLE CONNECTOR FORM FACTOR
E. VOIP - VOICE OVER INTERNET PROTOCOL (IP) TELEPHONE SYSTEM
F. POE - POWER OVER ETHERNET
G. HDMI - HIGH-DEFINITION MULTIMEDIA INTERFACE DIGITAL VIDEO STANDARD
H. AEC - ACOUSTIC ECHO CANCELING MICROPHONE INPUT
I. PGM - PROGRAM AUDIO OR VIDEO
J. RS232 - UNBALANCED SERIAL CONTROL INTERFACE STANDARD
K. CNTR - CONTROL INPUT OR OUTPUT
L. OFE - OWNER FURNISHED EQUIPMENT

DEVICE LEGEND:

(S#) AUDIO VISUAL PAGING SPEAKER HORN PROVIDED AND INSTALLED BY AUDIO/VISUAL CONTRACTOR.
• #SUBSCRIPT INDICATES MODEL TYPE. REFERENCE FLOOR PLAN & DETAILS FOR MODEL TYPE.

ELECTRICAL CONDUIT ROUGH-IN LEGEND:

(S#) AUDIO VISUAL PAGING SPEAKER HORN. AUDIO VISUAL CONTRACTOR TO PROVIDE MANUFACTURER'S MOUNTING ACCESSORIES FOR ALL LOCATIONS AS SHOWN ON PLANS. COORDINATE MOUNTING LOCATION WITH ARCHITECT. COORDINATE HORN AND ACCESSORY FINISH WITH ARCHITECT.
• ELECTRICAL CONTRACTOR TO PROVIDE AND INSTALL (1) 1-GANG BACK BOX AND 3/4" CONDUIT BETWEEN SPEAKER BOXES. ROUTE CONDUIT TO ACCESSIBLE CEILING SPACES VIA PASS-THRU SLEEVES.

120 VOLT DUPLEX RECEPTACLE NEMA 5-20R. PROVIDED BY ELECTRICAL CONTRACTOR. SEE PLANS AND DETAILS FOR LOCATIONS. ELEVATION IS AT 10' AFF OR AS NOTED ON PLANS.

D# DATA OUTLET. BACK BOX PROVIDED BY ELECTRICAL CONTRACTOR. SEE PLANS AND DETAILS FOR LOCATIONS AND QUANTITIES. ELEVATION IS AT 10" AFF OR AS NOTED ON PLANS. REFERENCE TELECOM DRAWINGS FOR ROUGH-IN REQUIREMENTS.
• #SUBSCRIPT DETAILS NUMBER OF DATA DROPS PER LOCATION.

SHEET LIST

AV-000	COVER PAGE
AV-201.1	GROUND LEVEL FLOOR PLAN - SECTION A
AV-201.2	GROUND LEVEL FLOOR PLAN - SECTION B
AV-301	ONE-LINE DIAGRAM - PAGING SYSTEM

J&A
ENGINEERING CONSULTANTS
4994 LOWER ROSWELL ROAD, SUITE ONE
MARIETTA, GEORGIA 30068
PHONE: (770) 817-4220
FAX: (678) 234-6878

Menefee Architecture | Architecture Planning Design
1075 Brady Ave NW Atlanta GA 30318 | t 404.876.1011

COPYRIGHT

This drawing and all reproductions are copyrighted and the property of Menefee Architecture LLC and may not be used in any way without their permission.

COPYRIGHT 2018

ROME TENNIS - INDOOR COURTS
ROME, GEORGIA 30165

DRAWN BY	CHECKED BY
Author	Checker

DATE
2019-02-15

REVISIONS	
NUMBER	DATE

TITL
COVER SHEET & LEGENDS

PROJECT NUMBER
18060

SHEET NUMBER
AV-000

75% CONSTRUCTION DOCUMENTS 2/15/2019

KEY NOTES:

1. ELECTRICAL CONTRACTOR TO PROVIDE AND INSTALL SURFACE MOUNTED 3/4" CONDUIT AND (1) 1-GANG JUNCTION BOX 12" ABOVE SPEAKER LOCATION AS SHOWN ON PLANS. AUDIO VISUAL CONTRACTOR SHALL PROVIDE AND INSTALL SURFACE MOUNT PAGING HORNS AT LOCATION SHOWN.

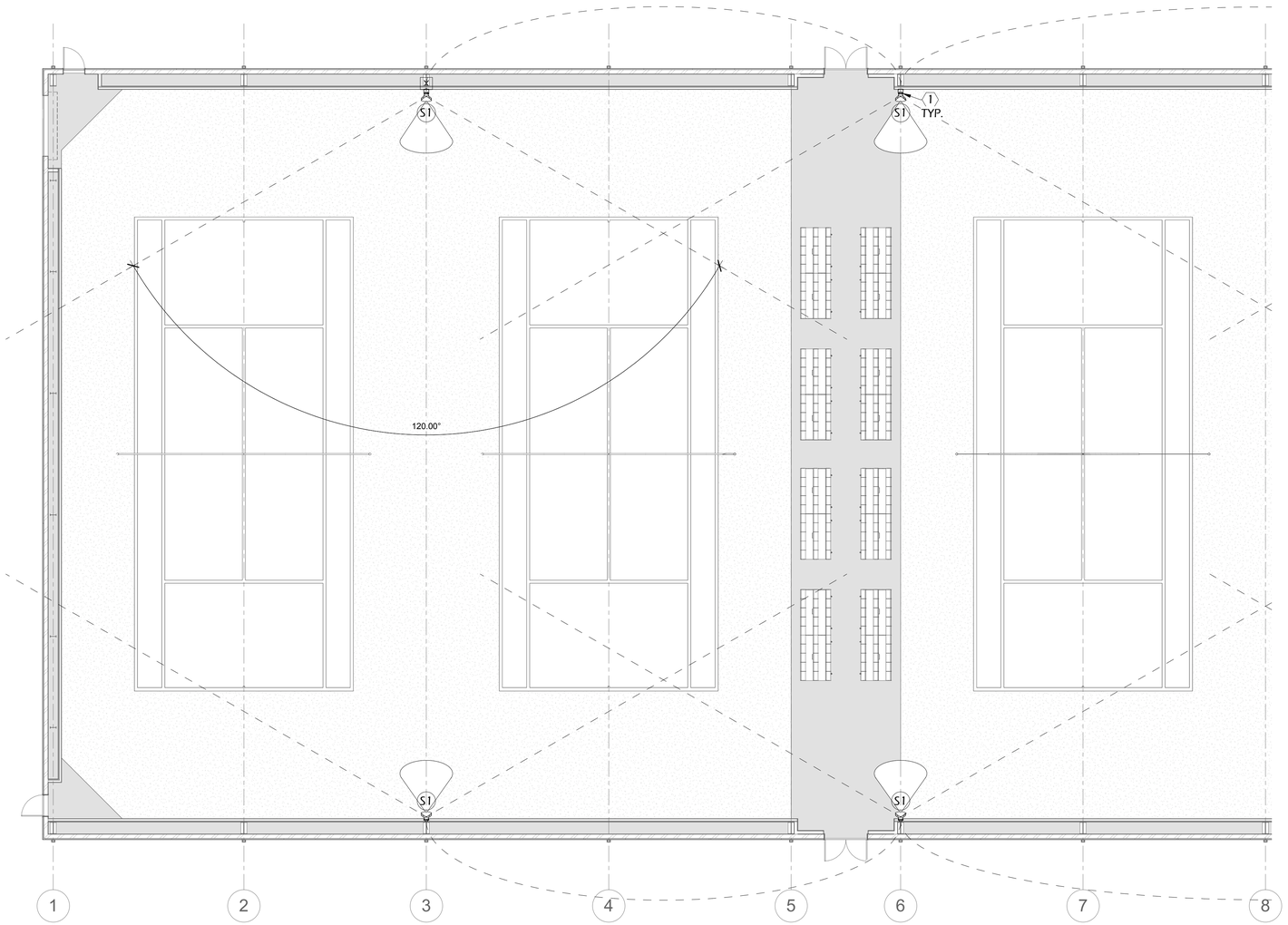

FLOOR PLAN 1 — AV - GROUND LEVEL - A
3/32" = 1'-0"

KEY PLAN

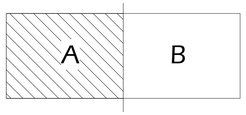

J&A
ENGINEERING CONSULTANTS
4994 LOWER ROSWELL ROAD, SUITE ONE
MARIETTA, GEORGIA 30068
PHONE: (770) 817-4220
FAX: (678) 234-6878

Menefee Architecture | Architecture Planning Design
1075 Brady Ave NW Atlanta GA 30318 | 1 404.876.1011

COPYRIGHT

This drawing and all reproductions are copyrighted and the property of Menefee Architecture LLC and may not be used in any way without their permission.

COPYRIGHT 2018

ROME TENNIS - INDOOR COURTS

ROME, GEORGIA 30165

DRAWN BY	CHECKED BY
Author	Checker

DATE
2019-02-15

REVISIONS	
NUMBER	DATE

TITL
GROUND LEVEL FLOOR PLAN - SECTION A

PROJECT NUMBER
18060

SHEET NUMBER
AV-201.1

75% CONSTRUCTION DOCUMENTS 2/15/2019

KEY NOTES:

1. ELECTRICAL CONTRACTOR TO PROVIDE AND INSTALL SURFACE MOUNTED 3/4" CONDUIT AND (1) 1-GANG JUNCTION BOX 6" ABOVE SPEAKER LOCATION AS SHOWN ON PLANS. AUDIO VISUAL CONTRACTOR SHALL PROVIDE AND INSTALL SURFACE MOUNT PAGING HORNS AT LOCATION SHOWN.

2. AUDIO/VISUAL WALL MOUNT EQUIPMENT RACK . WALL BLOCKING REQUIRED. COORDINATE WITH ARCHITECT FOR WALL MOUNTED RACK OPENING REQUIREMENTS. INCLUDE THERMOSTATICALLY CONTROLLED FAN KIT ON TOP OF RACK . RACK TO BE PROVIDED AND INSTALLED BY TELECOM CONTRACTOR. SEE TELECOM DRAWINGS FOR ADDITIONAL INFORMATION.

3. COORDINATE WITH TELECOM PROVIDER TWO (2) DATA OUTLETS MOUNTED TO BACKBOARD ABOVE AUDIO VISUAL RACK. SEE TELECOM DRAWINGS FOR ADDITIONAL INFORMATION.

4. ELECTRICAL CONTRACTOR TO PROVIDE AND INSTALL ONE(1) 120V/1-PHASE DUPLEX RECEPTACLE ABOVE RACK FROM A DEDICATED 20A/1-PHASE CIRCUIT IN HOUSE POWER PANEL, MOUNTED AT 10' AFF. SEE PROJECT ELECTRICAL DRAWINGS FOR CIRCUITING.

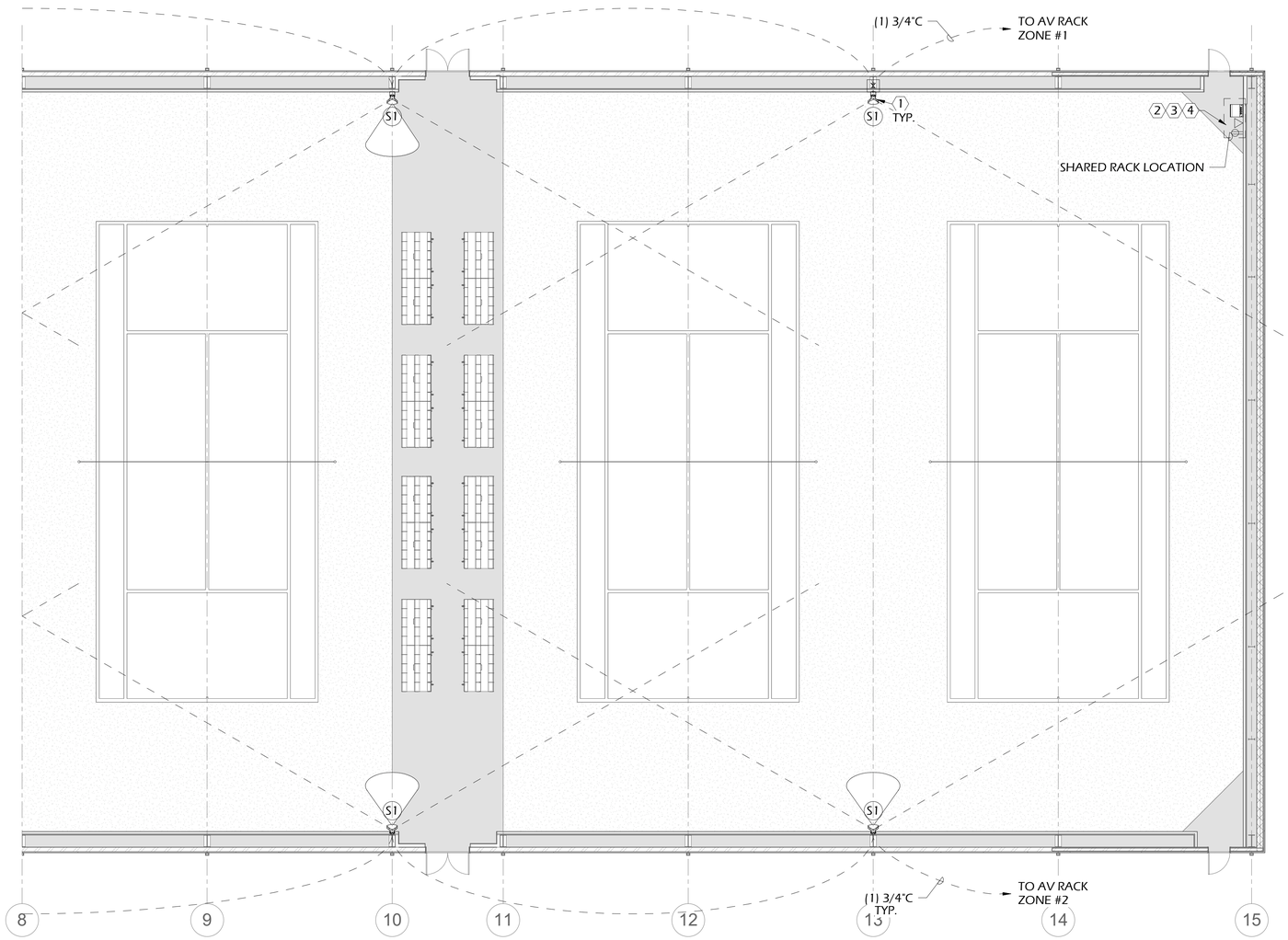

FLOOR PLAN 3/32" = 1'-0" — 1 — AV - GROUND LEVEL - B

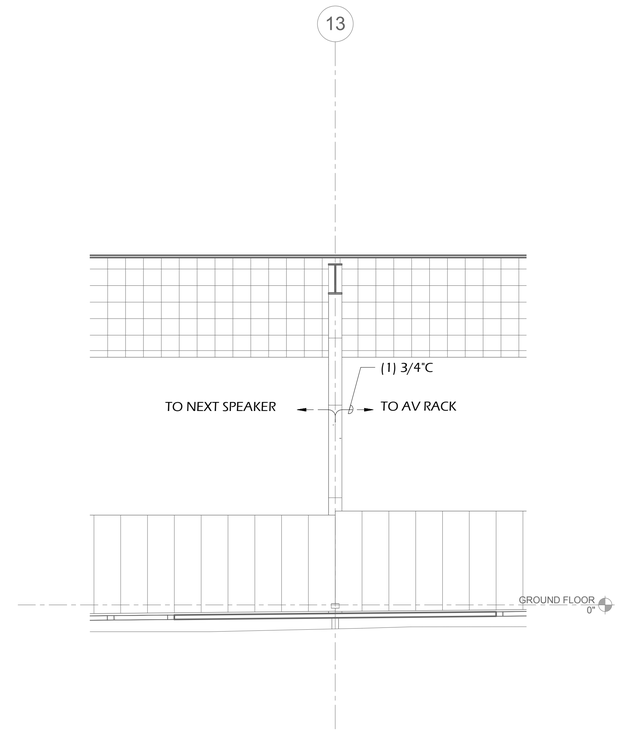

DETAILS 3/16" = 1'-0" — 2 — SPEAKER DETAIL

KEY PLAN

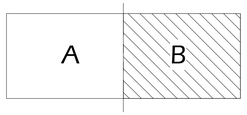

J&A
ENGINEERING CONSULTANTS
4994 LOWER ROSWELL ROAD, SUITE ONE
MARIETTA, GEORGIA 30068
PHONE: (770) 817-4220
FAX: (678) 234-6878

Menefee Architecture | Architecture Planning Design
1075 Brady Ave NW Atlanta GA 30318 | t 404.876.1011

COPYRIGHT

This drawing and all reproductions are copyrighted and the property of Menefee Architecture LLC and may not be used in any way without their permission.

COPYRIGHT 2018

ROME TENNIS - INDOOR COURTS

ROME, GEORGIA 30165

DRAWN BY	CHECKED BY
BT	JG

DATE
2019-02-15

REVISIONS	
NUMBER	DATE

TITL

GROUND LEVEL FLOOR PLAN - SECTION B

PROJECT NUMBER
18060

SHEET NUMBER
AV-201.2

75% CONSTRUCTION DOCUMENTS 2/15/2019

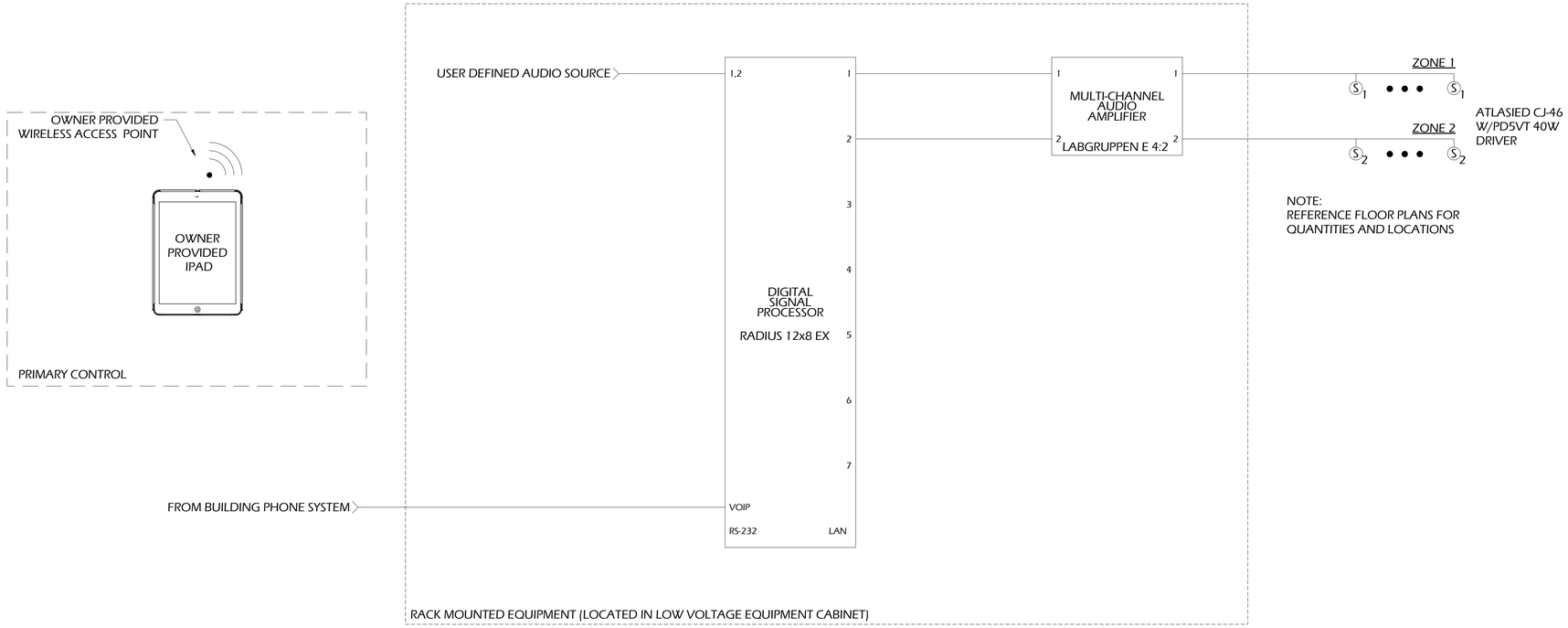

GENERAL NOTES:

A. REFERENCE CEILING PLAN FOR LOCATION AND QUANTITIES.

B. AUDIO VISUAL ROUGH-IN FOR EQUIPMENT SHALL BE PROVIDED AS DESIGNED.

C. IPAD SERVES AS A PRIMARY CONTROL PANEL. CONTRACTOR TO ASSIST OWNER WITH CONTROL APP INSTALLATION.

D. EQUIPMENT TO BE RACK MOUNTED AND LOCATED IN LOW VOLTAGE EQUIPMENT CABINET.

PROGRAMMING NOTES:

A. AUDIO VISUAL CONTRACTOR TO REVIEW FINAL CONTROL FUNCTION WITH OWNER PRIOR TO PRE-PROGRAMMING PHASE.

B. AV CONTROL SYSTEM TO PROVIDE THE FOLLOWING FUNCTIONALITY AS A MINIMUM:

1. PROGRAM AUDIO LEVEL CONTROL.
2. PAGING BY ZONE.

ONE-LINE
N.T.S.

1 ONE-LINE DIAGRAM - PAGING

J&A
ENGINEERING CONSULTANTS
4994 LOWER ROSWELL ROAD, SUITE ONE
MARIETTA, GEORGIA 30068
PHONE: (770) 817-4220
FAX: (678) 234-6878

Menefee Architecture | Architecture Planning Design
1075 Brady Ave NW Atlanta GA 30318 | t 404.876.1011

COPYRIGHT

This drawing and all reproductions are copyrighted and the property of Menefee Architecture LLC and may not be used in any way without their permission.

COPYRIGHT 2018

ROME TENNIS - INDOOR COURTS

ROME, GEORGIA 30165

DRAWN BY	CHECKED BY
LC	JG

DATE
2019-02-15

REVISIONS	
NUMBER	DATE

TITL
ONE-LINE WIRING DIAGRAM

PROJECT NUMBER
18060

SHEET NUMBER
AV-301

75% CONSTRUCTION DOCUMENTS 2/15/2019

LOW VOLTAGE SYSTEMS

ROME TENNIS CENTER

ROME/FLOYD COUNTY

ROME, GEORGIA 30165

SUBMITTED ON: FEBRUARY 15, 2019

STRUCTURED CABLING AND SECURITY DEVICE LEGEND:

▽ DATA OUTLET, MOUNT AT 18" AFF. PROVIDE TWO (2) CATEGORY 6/23 AWG/UTP CABLES FROM STATION OUTLET TO LOCAL TELECOM ENCLOSURE. DESIGNATE CABLES FOR DATA APPLICATIONS AND TERMINATE ON CATEGORY 6 DATA PATCH PANEL.

▽ W WALL PHONE, SINGLE DATA WITH WALL PHONE PLATE, MOUNT AT 48" AFF. TELECOM CONTRACTOR TO PROVIDE ONE (1) CATEGORY 6/23 AWG/UTP CABLE FROM OUTLET LOCATION TO LOCAL TELECOM ENCLOSURE AND TERMINATE ON CATEGORY 6 PATCH PANEL AND LABEL FOR VOICE APPLICATION.

(P) DOOR POSITION SWITCH. PROVIDED, INSTALLED, WIRED AND INTEGRATED BY SECURITY CONTRACTOR. SEE PLAN DETAILS FOR REQUIREMENTS.

[E] ELECTRIC DOOR HARDWARE. ALL ELECRIC DOOR HARDWARE DEVICES SUPPLIED BY DOOR HARDWARE CONTRACTOR AND INSTALLED BY SECURITY CONTRACTOR. POWER SUPPLIES FOR ALL DOOR HARDWARE PROVIDED AND INSTALLED BY THE SECURITY CONTRACTOR. ALL DEVICES WIRED AND INTEGRATED BY THE SECURITY CONTRACTOR.

[CR] MULTI-TECHNOLOGY CARD READER MOUNTED AT 42" AFF. SEE PLAN DETAILS FOR REQUIREMENTS. SECURITY DEVICE TO BE PROVIDED, INSTALLED, AND PROGRAMMED BY SECURITY CONTRACTOR.

[KP] INTRUSION DETECTION SYSTEM KEYPAD MOUNTED AT 48" AFF. PROVIDED AND INSTALLED BY THE SECURITY CONTRACTOR.

FIXED VIDEO SURVEILLANCE CAMERA. TELECOM CONTRACTOR TO PROVIDE AND INSTALL ONE (1) CATEGORY 6/23 AWG/UTP PLENUM CABLE FROM CAMERA LOCATION TO LOCAL TELECOM ENCLOSURE. TERMINATE CABLE IN CATEGORY 6 SINGLE PORT BISCUIT JACK. CAMERA TO BE PROVIDED, INSTALLED, AND PROGRAMMED BY SECURITY CONTRACTOR. SEE SPECIFICATIONS FOR REQUIREMENTS.

MULTI-SENSOR VIDEO SURVEILLANCE CAMERA. TELECOM CONTRACTOR TO PROVIDE AND INSTALL ONE (1) CATEGORY 6/23 AWG/UTP PLENUM CABLE FROM CAMERA LOCATION TO LOCAL TELECOM ENCLOSURE. TERMINATE CABLE IN CATEGORY 6 SINGLE PORT BISCUIT JACK. CAMERA TO BE PROVIDED, INSTALLED, AND PROGRAMMED BY SECURITY CONTRACTOR. SEE SPECIFICATIONS FOR REQUIREMENTS.

WALL MOUNT WIRELESS ACCESS POINT. TELECOM CONTRACTOR TO PROVIDE TWO (2) CATEGORY 6A/23 AWG/UTP CABLES FROM STATION OUTLET TO LOCAL TELECOM ENCLOSURE AND TERMINATE ON CATEGORY 6A PATCH PANEL.

(S) DOOR ALARM SOUNDER, PROVIDED AND INSTALLED BY SECURITY CONTRACTOR, MOUNTED AT 80" AFF. REFERENCE FLOOR PLANS FOR QUANTITY AND LOCATIONS.

WP INDICATES WEATHER-PROOF EQUIPMENT REQUIREMENT.

• AUTOMATIC OPERATOR ACTUATOR MOUNTED AT 42" AFF. PROVIDED BY DOOR HARDWARE CONTRACTOR, INSTALLED AND WIRED BY THE SECURITY CONTRACTOR.

ELECTRICAL ROUGH-IN:

▽ ▽ W DATA OUTLET. PROVIDE WALL MOUNT 4" SQUARE BACKBOX WITH SINGLE GANG TILE RING. PROVIDE ONE (1) - 1" EMT CONDUIT FROM BOX TO ACCESSIBLE CEILING SPACE.

(P) DOOR POSITION SWITCH. PROVIDE ONE (1) - 3/4" EMT CONDUIT ROUTED FROM DOOR FRAME TO ACCESSIBLE CEILING SECURITY JUNCTION BOX. SEE INSTALLATION DETAIL.

[E] ELECTRIC DOOR HARDWARE. PROVIDE TWO (2) - 3/4" EMT CONDUITS ROUTED FROM DOOR FRAME TO SECURITY JUNCTION BOX. SEE INSTALLATION DETAIL.

[CR] MULTI-TECHNOLOGY CARD READER. PROVIDE WALL MOUNT 4" SQUARE BACKBOX WITH SINGLE GANG TILE RING AT 42" AFF. PROVIDE ONE (1) - 3/4" EMT CONDUIT FROM BOX TO SECURITY JUNCTION BOX. SEE INSTALLATION DETAIL.

[KP] INTRUSION DETECTION SYSTEM KEYPAD. PROVIDE WALL MOUNT 4" SQUARE BACKBOX WITH SINGLE GANG TILE RING. PROVIDE ONE (1) - 3/4" EMT CONDUIT FROM BOX TO ACCESSIBLE CEILING SPACE.

VIDEO SURVEILLANCE CAMERA. SEE VIDEO SURVEILLANCE CAMERA SCHEDULE FOR REFERENCE TO MOUNTING REQUIREMENTS.

WALL MOUNTED WIRELESS ACCESS POINT. PROVIDE 4" SQUARE BACKBOX WITH SINGLE GANG TILE RING WITH ONE (1) - 1" EMT CONDUIT FROM BOX TO ACCESSIBLE CEILING / CABLING PATHWAY

(S) DOOR ALARM SOUNDER MOUNTED AT 80" AFF. PROVIDE 4" SQUARE BACKBOX WITH SINGLE GANG TILE RING WITH ONE (1) - 3/4" CONDUIT ROUTED TO ACCESSIBLE CEILING SPACE.

• AUTOMATIC OPERATOR ACTUATOR MOUNTED AT 42" AFF, TO SINGLE GANG BACKBOX. PROVIDE 1/2" EMT CONDUIT TO OPERATOR HOUSING.

SHEET LIST

LV-000	LEGEND AND COVER SHEET
LV-101	SITE PLAN
LV-201.1	GROUND LEVEL FLOOR PLAN - SECTION A
LV-201.2	GROUND LEVEL FLOOR PLAN - SECTION B
LV-401	ONE-LINE DIAGRAM - DATA & VOICE
LV-402	ONE-LINE DIAGRAM - ACCESS CONTROL & INTRUSION DETECTION
LV-403	ONE-LINE DIAGRAM - VIDEO SURVEILLANCE
LV-501	DETAILS
LV-502	DETAILS

J&A
ENGINEERING CONSULTANTS
4994 LOWER ROSWELL ROAD, SUITE ONE
MARIETTA, GEORGIA 30068
PHONE: (770) 817-4220
FAX: (678) 234-6878

Menefee Architecture | Architecture Planning Design
1075 Brady Ave NW Atlanta GA 30318 | t 404.876.1011

COPYRIGHT

This drawing and all reproductions are copyrighted and the property of Menefee Architecture LLC and may not be used in any way without their permission.

COPYRIGHT 2018

ROME TENNIS - INDOOR COURTS
ROME, GEORGIA 30165

DRAWN BY	CHECKED BY
BT	JG

DATE
2019-02-15

REVISIONS	
NUMBER	DATE

TITL
COVER PAGE

PROJECT NUMBER
18060

SHEET NUMBER
LV-000

75% CONSTRUCTION DOCUMENTS 2/15/2019

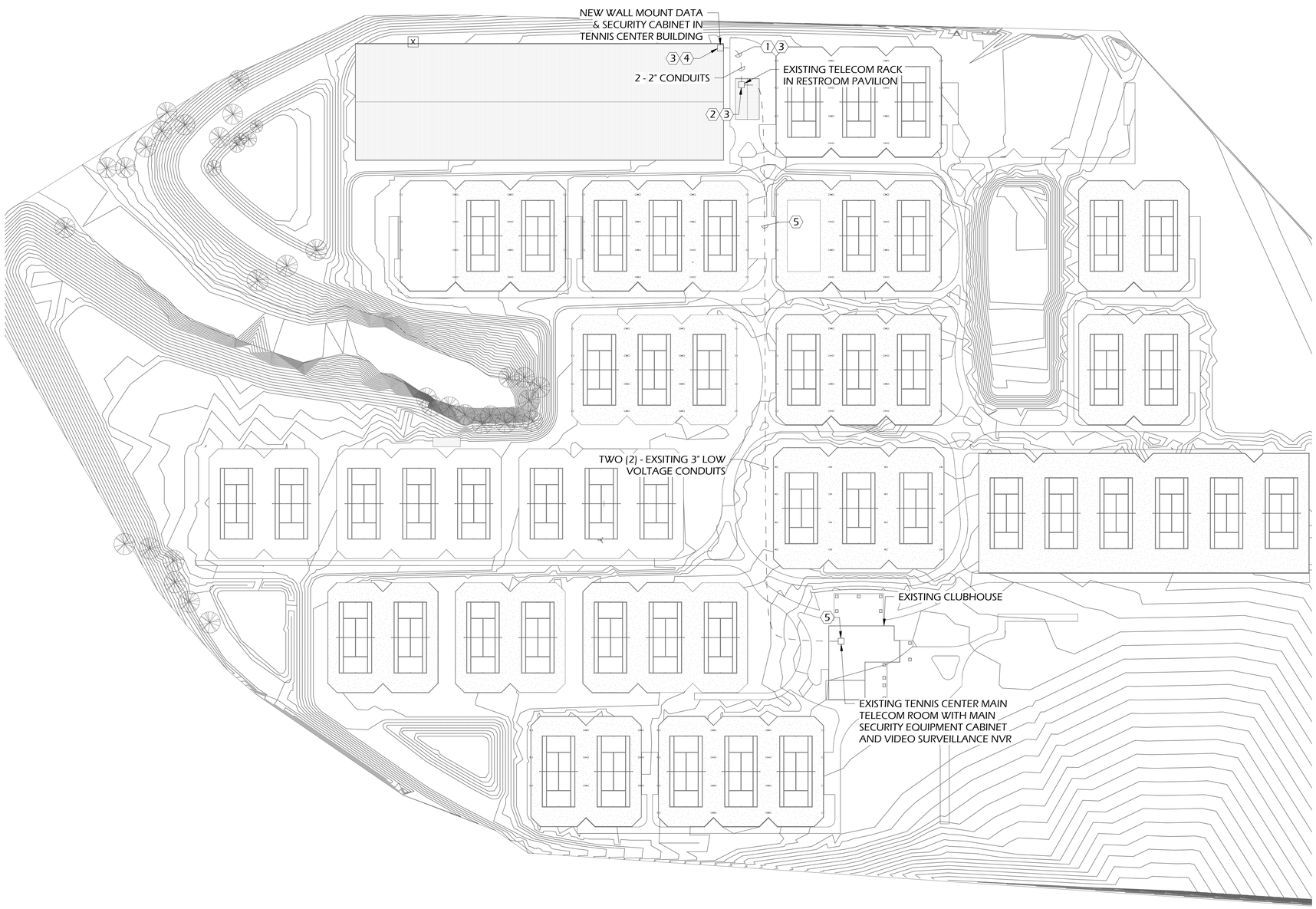

FLOOR PLAN 1 SITE PLAN
1" = 60'-0"

GENERAL NOTES:

A. NO CONDUIT RUN TO CONTAIN MORE THAN TWO (2) 90 DEGREE BENDS BETWEEN PULLING POINTS. PROVIDE JUNCTION BOXES WHERE REQUIRED TO MAINTAIN (2) 90 DEGREE BEND RULE.

B. ALL SLUB AND CMU BLOCK WALL PENETRATIONS TO BE FIRE-PROOFED AND SEALED.

C. ALL CONDUITS ROUTED BELOW GRADE TO BE SEALED TO PREVENT WATER INFILTRATION INTO BUILDINGS.

D. ALL CONDUIT ROUTED BELOW GRADE OR IN SLAB ON GRADE TO BE SCHEDULE 40 PVC. CONDUIT TURN-UP ELBOWS AND ALL CONDUIT ROUTED ABOVE GRADE TO BE METAL - RIGID FR ELBOWS.

E. REFERENCE ELECTRICAL SPECIFICATIONS FOR DUCT BANK INSTALLATION REQUIREMENTS. INSTALL CONDUIT PER NEC CODE REQUIREMENTS.

F. FOR ALL NEW INSTALLED CONDUITS, PROVIDE ONE (1) - #10 COPPER TRACER WIRE WITH GROUND RODS INSTALLED ALONG ENTIRE LENGTH OF DUCT BANK WITH GROUNDING ROD AT EACH END AND AT PULL BOX.

KEY NOTES:

1. PROVIDE, BELOW GRADE, NOTED QUANTITY OF SCHEDULE 40 PVC CONDUITS BETWEEN DATA CABINET LOCATION AND RESTROOM PAVILION. INSTALL CONDUIT PER NEC CODE REQUIREMENTS. USE LONG RADIUS 90 DEGREE ELBOWS TO TURN CONDUIT UP FROM BELOW GRADE. CONDUITS TO TURN-UP ~ 3" ABOVE GRADE SLAB. ALL CONDUIT OPENINGS ARE TO BE SEALED. REFER TO FLOOR PLAN DRAWING FOR CONDUIT STUB-UP LOCATION.

2. TURN UP CONDUIT ON ELECTRICAL ROOM WALL OF RESTROOM PAVILION BUILDING. TERMINATE CONDUITS INTO CONDULET AT ~ 18" AFF AND SLEEVE INTO ELECTRICAL ROOM. ALL WORK TO BE SCHEDULED AND PERFORMED UNDER THE AUTHORITY OF ROME TENNIS CENTER I.T. STAFF. RE-SEAL EXTERIOR WALL AFTER CONDUIT INSTALLATION.

3. SEE ONE-LINE DIAGRAMS FOR VOICE AND DATA CABLING REQUIREMENTS. ALL NEW COPPER CABLES TO BE TERMINATED ON PROTECTOR BLOCKS AND ALL NEW FIBER TO BE TERMINATED ON RACK MOUNT FIBER CONNECTOR PANELS. ALL CABLING TO BE WET LOCATION OUTSIDE PLANT RATED.

4. INSIDE NEW TENNIS CENTER, ROUTE CONDUITS IN WALL TO DATA CABINET LOCATION. PROVIDE 12" X 12" FLUSH BACKBOX FOR TERMINATION OF CONDUITS BEHIND SURFACE MOUNT DATA CABINET.

5. FIBER OPTIC CABLE BETWEEN PAVILION & CLUBHOUSE IS EXISTING AND WILL BE RE-USED FOR THIS PROJECT. NO ADDITIONAL WORK REQUIRED.

J&A
ENGINEERING CONSULTANTS
4994 LOWER ROSWELL ROAD, SUITE ONE
MARIETTA, GEORGIA 30068
PHONE: (770) 817-4220
FAX: (678) 234-6878

Menefee Architecture | Architecture Planning Design
1075 Brady Ave NW Atlanta GA 30318 | t 404.876.1011

COPYRIGHT

This drawing and all reproductions are copyrighted and the property of Menefee Architecture LLC and may not be used in any way without their permission.

COPYRIGHT 2018

ROME TENNIS - INDOOR COURTS

ROME, GEORGIA 30165

DRAWN BY	CHECKED BY
BT	JG

DATE
2019-02-15

REVISIONS	
NUMBER	DATE

TITL
SITE PLAN

PROJECT NUMBER
18060

SHEET NUMBER
LV-101

75% CONSTRUCTION DOCUMENTS 2/15/2019

GENERAL NOTES:

A. ALL VOICE AND DATA CABLES TO BE ROUTED DIRECT TO TELECOM CABINET WITHOUT SPLICES. NO JUNCTIONS OR SPLICES IN CABLES ARE ACCEPTABLE.

B. ALL LOW VOLTAGE CABLES TO BE INSTALLED CONCEALED. LOW VOLTAGE CABLES TO BE ROUTED IN 3/4" EMT CONDUIT.

C. COORDINATE EXACT LOCATION OF VOICE AND DATA OUTLETS WITH POWER RECEPTACLES.

D. ALL CABLES TO BE ROUTED IN SLAB ON GRADE OR BELOW GRADE TO BE WET LOCATION RATED AND BE ROUTED IN FULL RACEWAY SYSTEM TO THE TELECOM CABINET.

KEY NOTES:

1. COORDINATE LOCATION OF ALL VIDEO SURVEILLANCE CAMERAS WITH BUILDING SYSTEMS IN ORDER TO ENSURE CLEAR FIELD OF VIEW. RELOCATE CAMERAS AS REQUIRED.
2. COORDINATE LOCATION OF DATA OUTLETS WITH SCORE BOARD SYSTEMS.
3. DATA OUTLET TO BE MOUNTED AT ~ 10'-0" AFF FOR FUTURE PLAY SIGHT SYSTEM.
4. WIRE AUTOMATIC DOOR OPERATORS & ACTUATOR OPERATORS SPECIFIED BY OTHERS.
5. IP DEVICE TO BE PROVIDED WITH POE EXTENDER, TYPICAL TO VERACITY OUTREACH MAX UNITS. PROVIDE POWER INJECTOR FOR CAMERAS.
6. SIZE CONDUCTORS FOR REQUIRED CABLING DISTANCE. COORDINATE WITH MANUFACTURER.

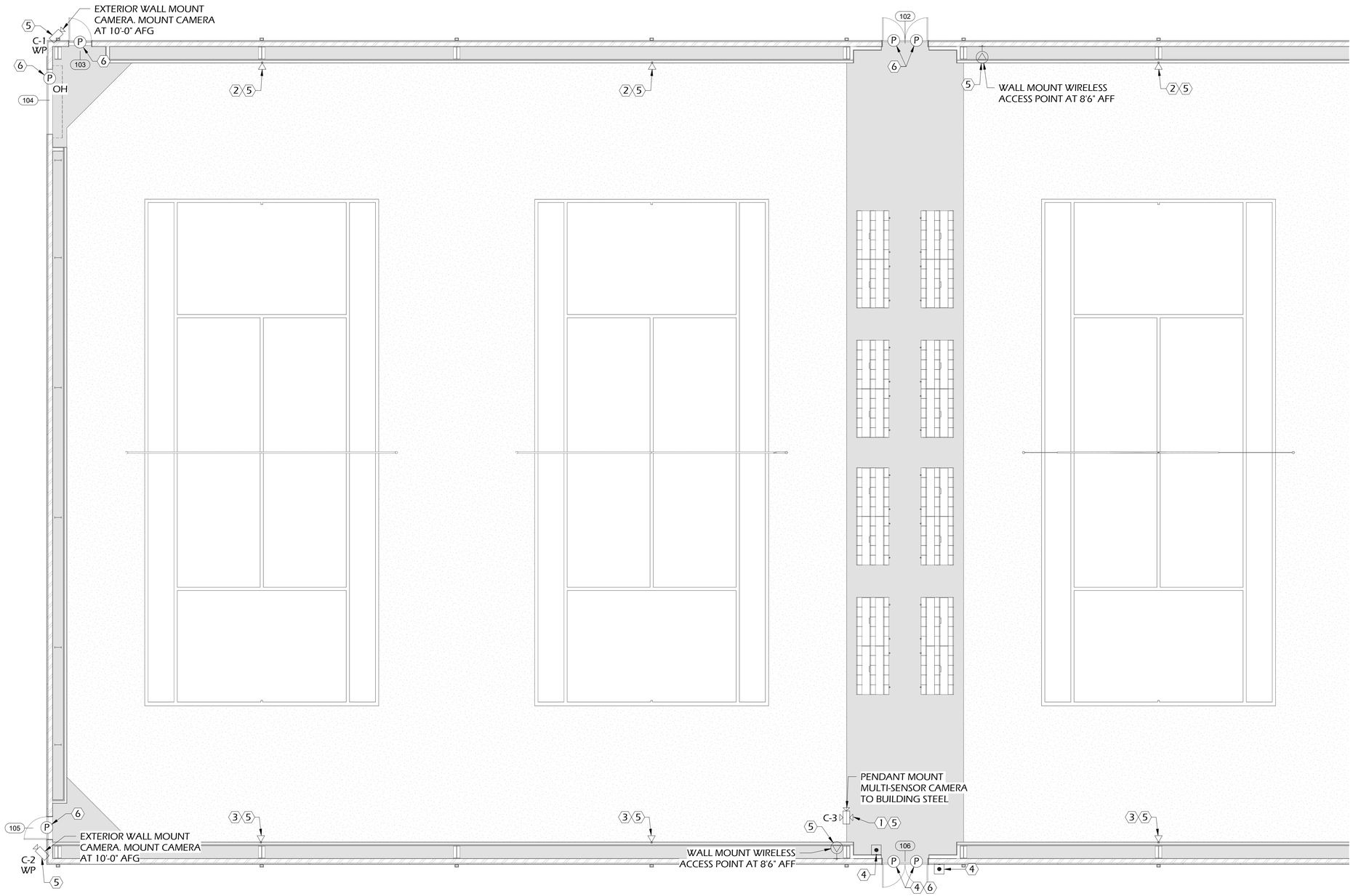

FLOOR PLAN 1 GROUND LEVEL - A
1/8" = 1'-0"

KEY PLAN

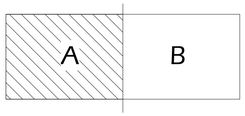

J&A
ENGINEERING CONSULTANTS
4994 LOWER ROSWELL ROAD, SUITE ONE
MARIETTA, GEORGIA 30068
PHONE: (770) 817-4220
FAX: (678) 234-6878

Menefee Architecture | Architecture Planning Design
1075 Brady Ave NW Atlanta GA 30318 | t 404.876.1011

COPYRIGHT

This drawing and all reproductions are copyrighted and the property of Menefee Architecture LLC and may not be used in any way without their permission.

COPYRIGHT 2018

ROME TENNIS - INDOOR COURTS

ROME, GEORGIA 30165

DRAWN BY	CHECKED BY
BT	JG

DATE
2019-02-15

REVISIONS	
NUMBER	DATE

TITL

GROUND LEVEL FLOOR PLAN - SECTION A

PROJECT NUMBER
18060

SHEET NUMBER
LV-201.1

75% CONSTRUCTION DOCUMENTS 2/15/2019

GENERAL NOTES:

A. ALL VOICE AND DATA CABLES TO BE ROUTED DIRECT TO TELECOM CABINET WITHOUT SPLICES. NO JUNCTIONS OR SPLICES IN CABLES ARE ACCEPTABLE.

B. ALL LOW VOLTAGE CABLES TO BE INSTALLED CONCEALED. LOW VOLTAGE CABLES TO BE ROUTED IN 3/4" EMT CONDUIT.

C. COORDINATE EXACT LOCATION OF VOICE AND DATA OUTLETS WITH POWER RECEPTACLES.

D. ALL CABLES TO BE ROUTED IN SLAB ON GRADE OR BELOW GRADE TO BE WET LOCATION RATED AND BE ROUTED IN FULL RACEWAY SYSTEM TO THE TELECOM CABINET.

KEY NOTES:

1. COORDINATE LOCATION OF ALL VIDEO SURVEILLANCE CAMERAS WITH BUILDING SYSTEMS IN ORDER TO ENSURE CLEAR FIELD OF VIEW. RELOCATE CAMERAS AS REQUIRED.
2. COORDINATE LOCATION OF DATA OUTLETS WITH SCORE BOARD SYSTEMS.
3. SECURELY INSTALL CARD READER ON EXTERIOR WALL. WALL PENETRATION TO BE BEHIND CARD READER AND NO RACEWAY SHALL BE VISIBLE ON EXTERIOR OF BUILDING.
4. ELECTRICAL CONTRACTOR TO ROUTE DEDICATED 20 AMP, 120 VAC CIRCUITS IN 3/4" EMT CONDUIT FROM ELECTRICAL PANEL BOARD TO SECURITY PANEL & DATA CABINET LOCATION.
5. CONTRACTOR TO MOUNT SECURITY CONTROL PANEL IN VENTED EQUIPMENT CABINET. CABINET TO BE PROVIDED WITH LOCKSET. SEE ONE-LINE DIAGRAM FOR COMPLETE EQUIPMENT REQUIREMENTS. PROVIDE BATTERY BACK-UP & SURGE SUPPRESSION POWER STRIP INSIDE CABINET.
6. FOR IP CONNECTION FOR ACCESS CONTROL SITE CONTROLLER, CONTRACTOR TO EXTEND CATEGORY 6 DATA CABLE TO CATEGORY 6 PATCH PANEL IN DATA CABINET.
7. DATA OUTLET TO BE MOUNTED AT ~ 10'-0" AFF FOR FUTURE PLAY SIGHT SYSTEM.
8. WIRE AUTOMATIC DOOR OPERATORS AND ACTUATOR OPERATORS SPECIFIED BY OTHERS.

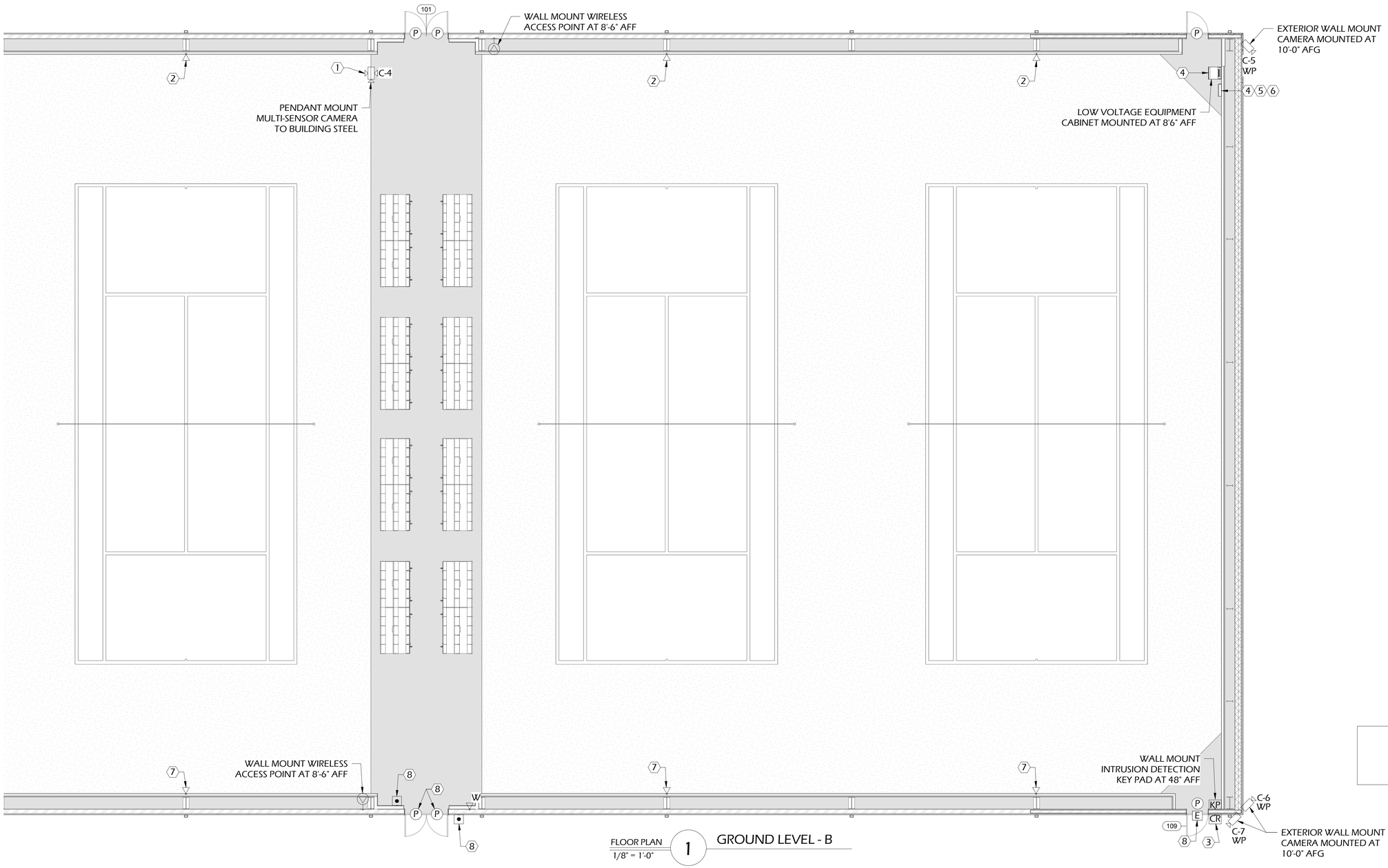

FLOOR PLAN 1 GROUND LEVEL - B
1/8" = 1'-0"

KEY PLAN

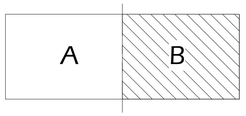

J&A ENGINEERING CONSULTANTS
4994 LOWER ROSWELL ROAD, SUITE ONE
MARIETTA, GEORGIA 30068
PHONE: (770) 817-4220
FAX: (678) 234-6878

Menefee Architecture | Architecture Planning Design
1075 Brady Ave NW Atlanta GA 30318 | t 404.876.1011

COPYRIGHT

This drawing and all reproductions are copyrighted and the property of Menefee Architecture LLC and may not be used in any way without their permission.

COPYRIGHT 2018

ROME TENNIS - INDOOR COURTS

ROME, GEORGIA 30165

DRAWN BY	CHECKED BY
BT	JG

DATE
2019-02-15

REVISIONS	
NUMBER	DATE

TITL

GROUND LEVEL FLOOR PLAN - SECTION B

PROJECT NUMBER
18060

SHEET NUMBER
LV-201.2

75% CONSTRUCTION DOCUMENTS 2/15/2019

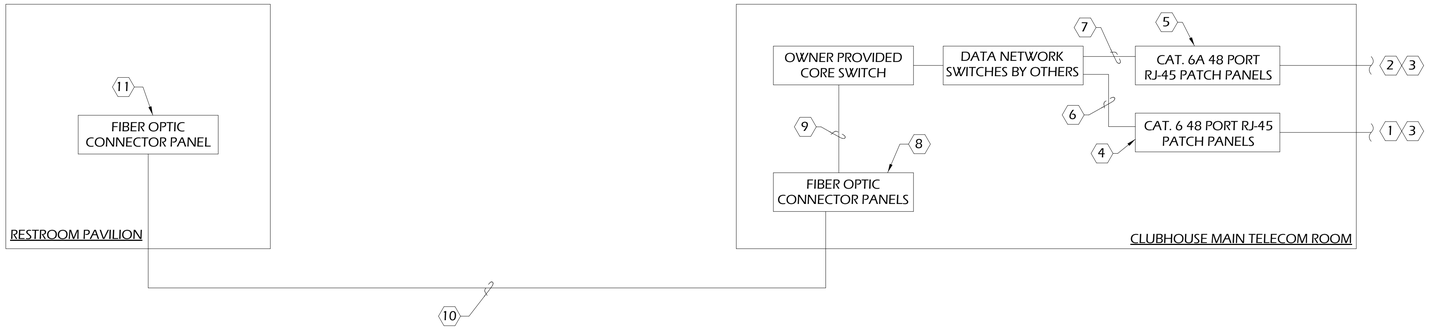

ONE-LINE
N.T.S.

1 ONE-LINE DIAGRAM - DATA

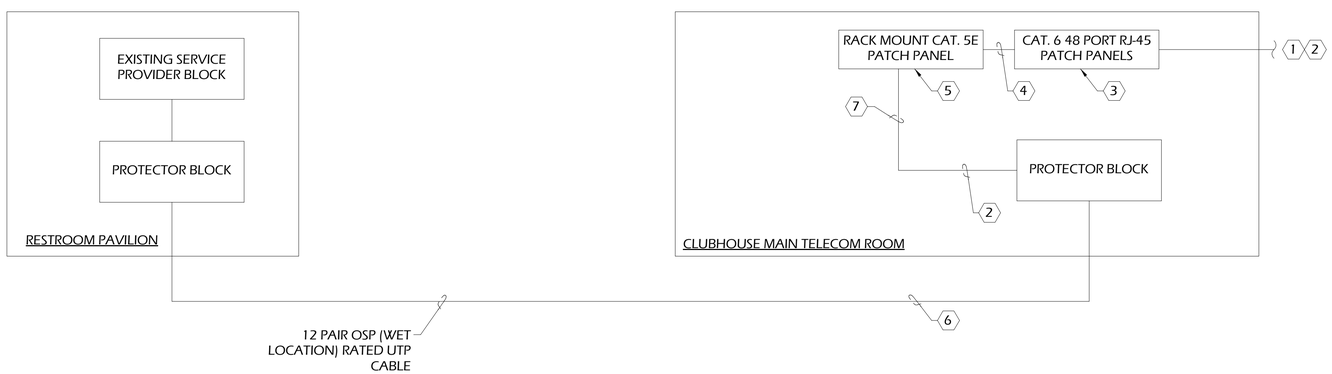

ONE-LINE
N.T.S.

2 ONE-LINE DIAGRAM - VOICE

GENERAL NOTES:

A. CONTRACTOR TO TEST FIBER WITH OPTICAL TIME DOMAIN REFLECTOMETER (OTDR) FROM BOTH DIRECTIONS. CONTRACTOR TO UTILIZE PROPER LAUNCH CORD AND TAIL CORD PER MANUFACTURERS RECOMMENDATIONS. CONTRACTOR TO SUBMIT OTDR TRACE RESULTS TO DESIGN ENGINEER TEAM WITH A PASS/FAIL INDICATOR PER MANUFACTURERS ACCEPTABLE RANGES.

KEY NOTES:

1. PROVIDE PLENUM-TYPE 23 AWG/CATEGORY 6 COMPLIANT 4 PR. CABLE FROM CATEGORY 6 PATCH PANEL IN TELECOM CABINET TO STATION OUTLET LOCATIONS. SEE LEGEND AND FLOOR PLANS FOR REQUIREMENTS.
2. PROVIDE PLENUM-TYPE 23 AWG/CATEGORY 6A COMPLIANT 4 PR. CABLES FROM CATEGORY 6A PATCH PANELS IN TELECOM ROOMS TO ALL WIRELESS ACCESS POINT LOCATIONS.
3. REFERENCE OUTLET DETAILS FOR TERMINATIONS REQUIREMENTS.
4. ALL CATEGORY 6 COPPER PATCH PANELS TO BE SIZED AS REQUIRED TO PROVIDE CAT. 6 LINK TO ALL STATIONS. PROVIDE SPARE CAPACITY AS REQUIRED IN SPECIFICATIONS. PATCH PANELS TO BE CATEGORY 6 24 PORT STANDARD DENSITY TYPE.
5. ALL CATEGORY 6A COPPER PATCH PANELS TO BE SIZED AS REQUIRED TO PROVIDE CAT. 6A LINK TO ALL STATIONS. PROVIDE SPARE CAPACITY AS REQUIRED IN SPECIFICATIONS. PATCH PANELS TO BE CATEGORY 6A 24 PORT STANDARD DENSITY TYPE FOR ALL WIRELESS ACCESS POINT DATA OUTLETS.
6. PROVIDE ONE(1) 12" CATEGORY 6 PATCH CABLE FOR EACH TERMINATED CATEGORY 6 HORIZONTAL CIRCUITS.
7. PROVIDE TWO (2) 12" CATEGORY 6A PATCH CABLE FOR EACH TERMINATED CATEGORY 6A HORIZONTAL CIRCUIT.
8. RACK MOUNT FIBER OPTIC CONNECTOR PANEL. ALL FIBER OPTIC STRANDS TO BE TERMINATED AND TESTED.
9. SINGLE MODE FIBER OPTIC PATCH CABLES. PROVIDE ONE (1) SINGLE MODE FIBER OPTIC PATCH CORD FOR EACH SINGLE MODE FIBER TERMINATION.
10. TELECOM CONTRACTOR TO PROVIDE AND INSTALL 6 STRAND RISER RATED SINGLE MODE FIBER OPTIC CABLE ROUTED BETWEEN TELECOM CABINETS.
11. UTILIZE EXISTING FIBER OPTIC CONNECTOR PANEL FOR TERMINATION OF NEW FIBER OPTIC CABLES.

KEY NOTES:

1. PROVIDE PLENUM-TYPE 23 AWG/CATEGORY 6 COMPLIANT 4 PR. CABLE FROM CATEGORY 6 PATCH PANEL IN TELECOM ROOMS TO STATION OUTLET LOCATIONS. SEE LEGEND AND FLOOR PLANS FOR REQUIREMENTS.
2. REFERENCE OUTLET DETAILS FOR TERMINATIONS REQUIREMENTS.
3. ALL CATEGORY 6 COPPER PATCH PANELS TO BE SIZED AS REQUIRED TO PROVIDE CAT. 6 LINK TO ALL STATIONS. PROVIDE SPARE CAPACITY AS REQUIRED IN SPECIFICATIONS. PATCH PANELS TO BE CATEGORY 6 24 PORT HIGH DENSITY TYPE.
4. CONTRACTOR TO FURNISH SIX(6) 12" CAT. 3 PATCH CABLE FOR EACH TELECOM ROOM. CONTRACTOR TO TURN OVER PATCH CABLES TO OWNER.
5. PROVIDE CATEGORY 5E - 24 PORT PATCH PANEL FOR ALL UTP BACKBONE CABLES. PROVIDE SPARE CAPACITY AS REQUIRED IN SPECIFICATIONS.
6. UTP BACKBONE CABLE TO BE PROVIDED WITH 10'-0" SERVICE LOOPS ON BOTH END OF CABLE.
7. 12 PAIR CATEGORY 3 VOICE CABLE ROUTED TO TELECOM CABINET.

J&A
ENGINEERING CONSULTANTS
4994 LOWER ROSWELL ROAD, SUITE ONE
MARIETTA, GEORGIA 30068
PHONE: (770) 817-4220
FAX: (678) 234-6878

Menefee Architecture | Architecture Planning Design
1075 Brady Ave NW Atlanta GA 30318 | t 404.876.1011

COPYRIGHT
This drawing and all reproductions are copyrighted and the property of Menefee Architecture LLC and may not be used in any way without their permission.
COPYRIGHT 2018

ROME TENNIS - INDOOR COURTS
ROME, GEORGIA 30165

DRAWN BY	CHECKED BY
BT	JG

DATE
2019-02-15

REVISIONS	
NUMBER	DATE

TITL
ONE-LINE DIAGRAM - DATA & VOICE

PROJECT NUMBER
18060

SHEET NUMBER
LV-401

75% CONSTRUCTION DOCUMENTS 2/15/2019

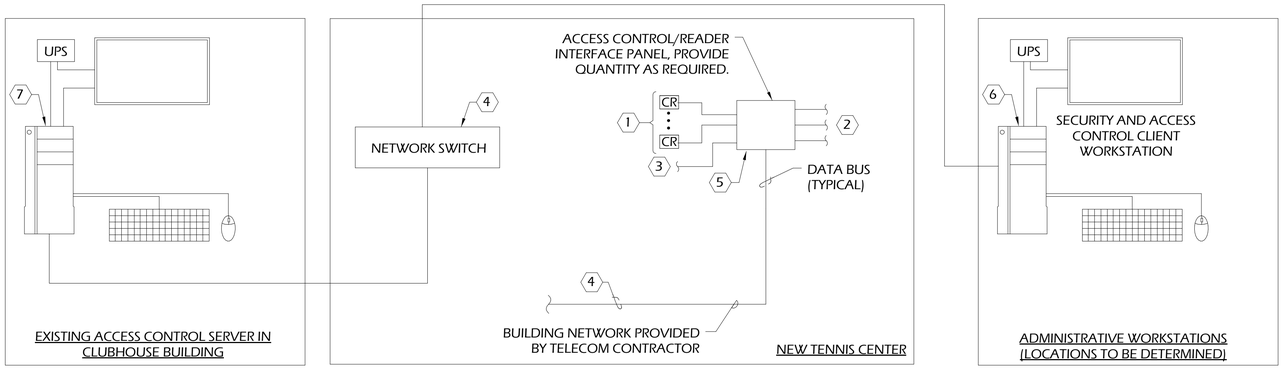

ONE LINE
N.T.S.

1 ACCESS CONTROL SYSTEM

KEY NOTES:

1. VERIFY AND PROVIDE EXACT QUANTITY OF CARD READERS, AND MISCELLANEOUS SIGNAL INPUTS AS SHOWN ON CONTRACT DRAWINGS.
2. CONTRACTOR TO INTERFACE WITH ELECTRIC AND ELECTROMAGNETIC LOCKS PER THE CONTRACT SPECIFICATIONS. CONTRACTOR TO INTEGRATE ALL CONTROLLED OUTPUTS INTO ACCESS CONTROL SYSTEM. VERIFY QUANTITY OF ALL CONTROLLED OUTPUTS WITH CONTRACT DRAWINGS.
3. SECURITY CONTRACTOR TO COORDINATE WITH FIRE ALARM CONTRACTOR TO EFFECT IMMEDIATE RELEASE OF ACCESS CONTROLLED DOORS BY THE FIRE ALARM SYSTEM UPON ACTIVATION OF THE FIRE ALARM SIGNAL.
4. SECURITY CONTRACTOR TO INTERFACE WITH BUILDING NETWORK BY PROVIDING CATEGORY 6 DATA CABLES BETWEEN ACCESS CONTROL PANELS AND OWNER PROVIDED NETWORK SWITCH.
5. PROVIDE BATTERY BACK-UP EQUIPMENT AT EACH READER INTERFACE PANEL TO SUPPORT THE ACS FOR A PERIOD OF 30 MINUTES.
6. CONTRACTOR TO PROVIDE, INSTALL, AND PROGRAM ACCESS CONTROL SOFTWARE CLIENT AND VMS/NVR CLIENT SOFTWARE ON UP TO TWO OWNER PROVIDED WORKSTATIONS. WORKSTATION LOCATIONS TO BE DETERMINED. VIDEO SURVEILLANCE AND ACCESS CONTROL SOFTWARE SHALL BOTH BE INSTALLED ON SAME PCS. SEE SPECIFICATIONS FOR REQUIREMENTS.
7. CONTRACTOR TO REPROGRAM EXISTING ACCESS CONTROL SERVER.

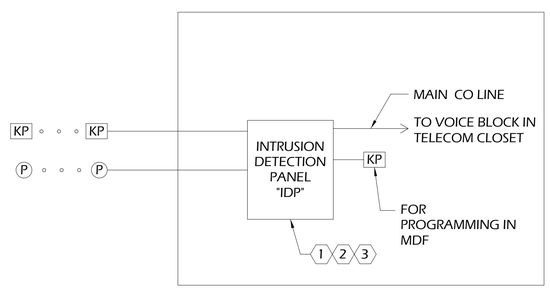

ONE LINE
N.T.S.

2 INTRUSION DETECTION SYSTEM

GENERAL NOTES:

A. VERIFY AND PROVIDE EXACT QUANTITY OF ALARM DETECTION DEVICES SHOWN ON FLOOR PLAN DRAWINGS.

KEY NOTES:

1. INTRUSION DETECTION PANEL TO BE PROTECTED AND POWERED BY BATTERY BACKUP. BATTERY TO PROVIDE ONE (1) HOUR FOR BACKUP.
2. ELECTRICAL CONTRACTOR TO PROVIDE AND INSTALL ONE(1) DEDICATED 120 VAC/20 AMP CIRCUIT WITH WALL MOUNTED DUPLEX OUTLET FOR INTRUSION DETECTION SYSTEM.
3. INTRUSION PANEL MUST BE EQUIPPED WITH DIGITAL COMMUNICATOR THAT ALLOWS ALARM SIGNALS TO BE TRANSMITTED TO A CENTRAL STATION MONITORING SERVICE.

J&A
ENGINEERING CONSULTANTS
4994 LOWER ROSWELL ROAD, SUITE ONE
MARIETTA, GEORGIA 30068
PHONE: (770) 817-4220
FAX: (678) 234-6878

Menefee Architecture | Architecture Planning Design
1075 Brady Ave NW Atlanta GA 30318 | t 404.876.1011

COPYRIGHT

This drawing and all reproductions are copyrighted and the property of Menefee Architecture LLC and may not be used in any way without their permission.

COPYRIGHT 2018

ROME TENNIS - INDOOR COURTS

ROME, GEORGIA 30165

DRAWN BY	CHECKED BY
BT	JG

DATE
2019-02-15

REVISIONS	
NUMBER	DATE

TITL

ONE-LINE DIAGRAM - ACCESS CONTROL & INTRUSION

18060

SHEET NUMBER

LV-402

75% CONSTRUCTION DOCUMENTS 2/15/2019

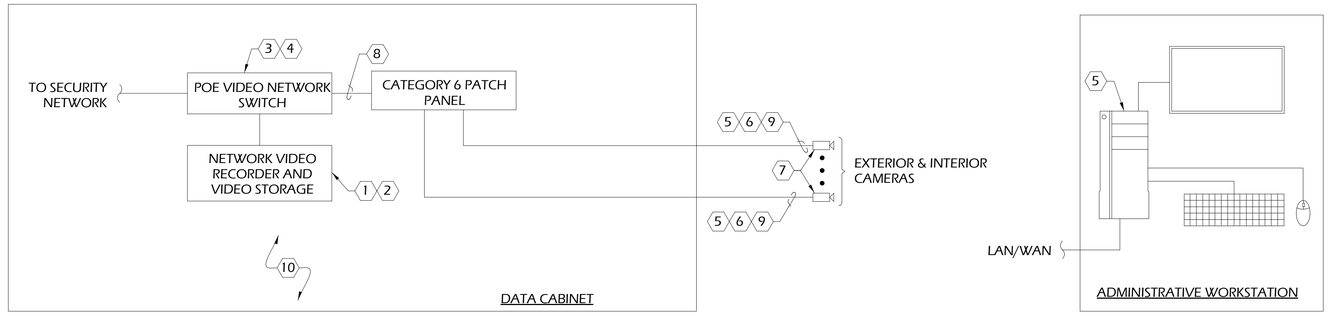

GENERAL NOTES:

A. CONTRACTOR TO PROVIDE ALL PROGRAMMING FOR IP CAMERAS, VMS SERVER AND NETWORK VIDEO RECORDER. SEE SPECIFICATION FOR ADDITIONAL PROGRAMMING REQUIREMENTS.

B. REFERENCE FLOOR PLAN DRAWINGS AND SPECIFICATIONS FOR COMPLETE REQUIREMENTS.

C. ALL VIDEO SURVEILLANCE CABLES TO BE ROUTED DIRECT TO EQUIPMENT ROOMS WITHOUT SPLICES. NO JUNCTIONS OR SPLICES IN CABLES ARE ACCEPTABLE.

D. NO CONDUIT RUN TO CONTAIN MORE THAN 180° OF BENDS BETWEEN PULLING POINTS. PROVIDE JUNCTION BOXES WHERE REQUIRED TO MAINTAIN 180° BEND RULE.

E. ALL WALL AND FLOOR PENETRATIONS TO BE SEALED AND FIREPROOFED. CONDUIT ROUTING PATH TO BE COORDINATED WITH ALL ENGINEERED SYSTEMS.

KEY NOTES:

1. THE CONTRACTOR SHALL PROVIDE NETWORK VIDEO RECORDER & VIDEO STORAGE. CONTRACTOR SHALL PROVIDE ALL REQUIRED LICENSING FOR NEW CAMERAS.
2. CONTRACTOR TO CONFIGURE VMS SYSTEM FOR "ACTIVITY DETECTION RECORDING". SEE SPECIFICATIONS FOR REQUIREMENTS. ALL VIDEO TO BE CONFIGURED TO BE MAINTAINED FOR A MINIMUM OF 30 DAYS.
3. CONTRACTOR TO COORDINATE WITH TELECOM CONTRACTOR FOR UTILIZATION OF DATA INFRASTRUCTURE TO ESTABLISH SECURITY NETWORK.
4. CONTRACTOR TO PROVIDE AND INSTALL POWER-OVER-ETHERNET SWITCH MOUNTED IN TELECOM RACK FOR VIDEO SURVEILLANCE SYSTEM.
5. CONTRACTOR TO LOAD AND CONFIGURE VIDEO SURVEILLANCE SOFTWARE ON UP TO TWO OWNER PROVIDED WORKSTATIONS. ALL CAMERA SETTINGS TO BE PROGRAMMED BY CONTRACTOR TO OWNER'S SATISFACTION.
6. CONTRACTOR TO PROVIDE AND INSTALL ONE (1) CATEGORY 6 CABLE FOR EACH IP DEVICE.
7. CONTRACTOR TO PROVIDE AND INSTALL LOW LIGHT, WIDE DYNAMIC RANGE (WDR), COLOR, IP MEGAPIXEL CAMERAS FOR EXTERIOR & INTERIOR LOCATIONS. SEE FLOOR PLANS FOR LOCATIONS. SEE CAMERA SCHEDULE FOR MOUNTING REQUIREMENTS.
8. CONTRACTOR TO PROVIDE AND INSTALL ALL CATEGORY 6 PATCH CABLES.
9. EXTERIOR CAMERAS TO BE PROVIDED WITH TRANSIENT VOLTAGE SURGE SUPPRESSION (TVSS) PROTECTION ON BOTH ENDS OF IP CABLE.
10. PROVIDE RACK MOUNT UPS. SEE SPECIFICATIONS FOR REQUIREMENTS.

ONE-LINE
N.T.S.

1 ONE-LINE DIAGRAM - VIDEO SURVEILLANCE

J&A
ENGINEERING CONSULTANTS
4994 LOWER ROSWELL ROAD, SUITE ONE
MARIETTA, GEORGIA 30068
PHONE: (770) 817-4220
FAX: (678) 234-6878

Menefee Architecture | Architecture Planning Design
1075 Brady Ave NW Atlanta GA 30318 | t 404.876.1011

COPYRIGHT

This drawing and all reproductions are copyrighted and the property of Menefee Architecture LLC and may not be used in any way without their permission.

COPYRIGHT 2018

ROME TENNIS - INDOOR COURTS
ROME, GEORGIA 30165

DRAWN BY	CHECKED BY
BT	JG

DATE
2019-02-15

REVISIONS	
NUMBER	DATE

TITL
ONE-LINE DIAGRAM - VIDEO SURVEILLANCE

PROJECT NUMBER
18060

SHEET NUMBER
LV-403

75% CONSTRUCTION DOCUMENTS 2/15/2019

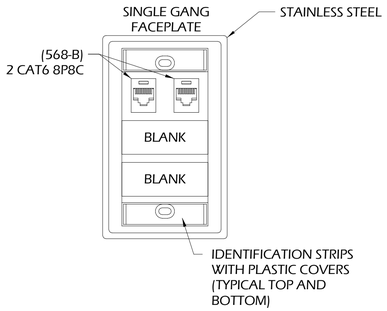

DETAIL NOT TO SCALE 1 TYPICAL 2-PORT DATA OUTLET

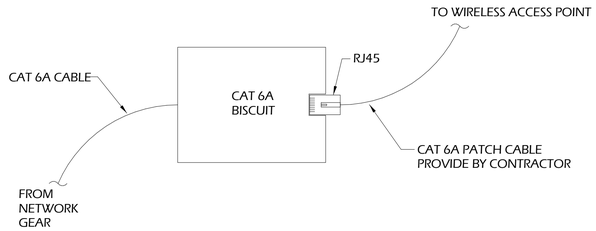

DETAIL NOT TO SCALE 2 WIRELESS ACCESS POINT TYPICAL ETHERNET BISCUIT

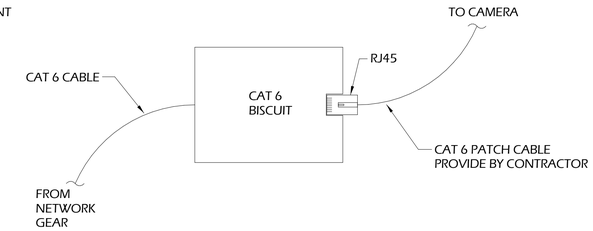

DETAIL NOT TO SCALE 3 TYPICAL ETHERNET BISCUIT

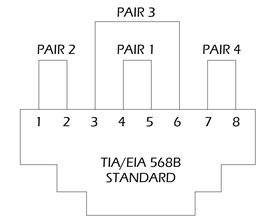

1.....T2 (WHT/ORNG)
2.....R2 (ORNG/WHT)
3.....T3 (WHT/GRN)
4.....R1 (BLU/WHT)
5.....T1 (WHT/BLU)
6.....R3 (GRN/WHT)
7.....T4 (WHT/BRN)
8.....R4 (BRN/WHT)

DETAIL NOT TO SCALE 4 RJ45 JACK TERMINATION

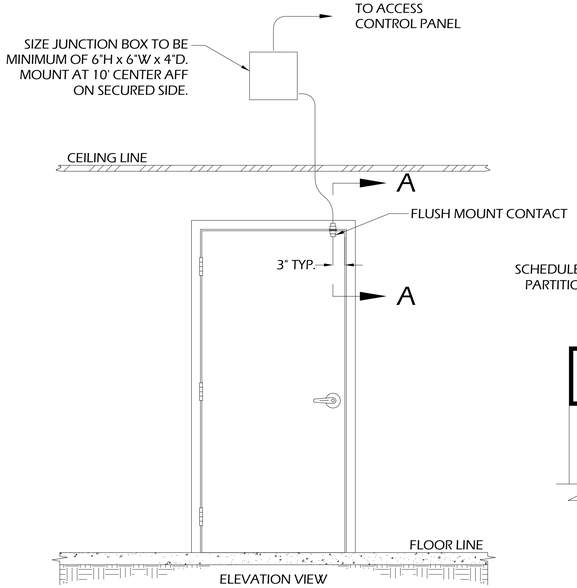

ELEVATION VIEW SECURED SIDE

SINGLE DOOR WITH DOOR CONTACT

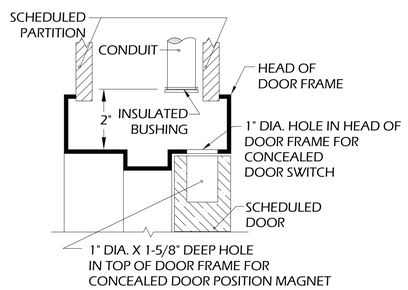

SECTION A-A

SHOWING FLUSH MOUNT MAGNETIC DOOR CONTACT INSTALLATION

DETAIL NOT TO SCALE 5 SINGLE DOOR DETAIL

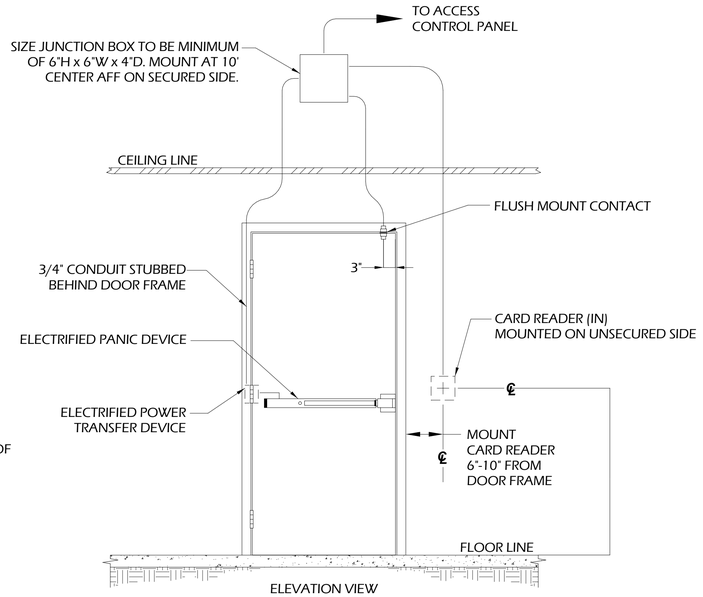

ELEVATION VIEW SECURED SIDE

SINGLE DOOR WITH CARD READER, DOOR CONTACT, ELECTRIFIED PANIC DEVICE, POWER TRANSFER DEVICE

DETAIL NOT TO SCALE 6 SINGLE DOOR DETAIL

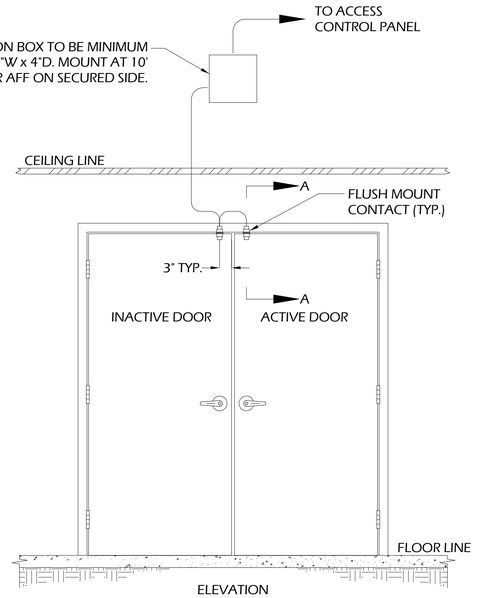

ELEVATION VIEW SECURED SIDE

DOUBLE DOOR WITH DOOR CONTACTS

DETAIL NOT TO SCALE 7 DOUBLE DOOR DETAIL

J&A
ENGINEERING CONSULTANTS
4994 LOWER ROSWELL ROAD, SUITE ONE
MARIETTA, GEORGIA 30068
PHONE: (770) 817-4220
FAX: (678) 234-6878

Menefee Architecture | Architecture Planning Design
1075 Brady Ave NW Atlanta GA 30318 | 404.876.1011

COPYRIGHT

This drawing and all reproductions are copyrighted and the property of Menefee Architecture LLC and may not be used in any way without their permission.

COPYRIGHT 2018

ROME TENNIS - INDOOR COURTS

ROME, GEORGIA 30165

DRAWN BY	CHECKED BY
Author	Checker

DATE
2019-02-15

REVISIONS	
NUMBER	DATE

TITL
DETAILS

PROJECT NUMBER
18060

SHEET NUMBER
LV-501

75% CONSTRUCTION DOCUMENTS 2/15/2019

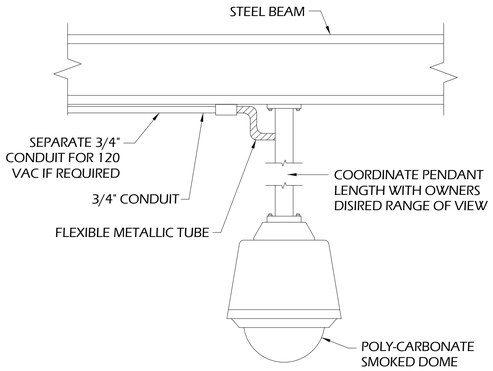

DETAIL 1 — FIXED OR MULTI-SENSOR PENDANT MOUNTED DOME CAMERA ENCLOSURE

NOT TO SCALE

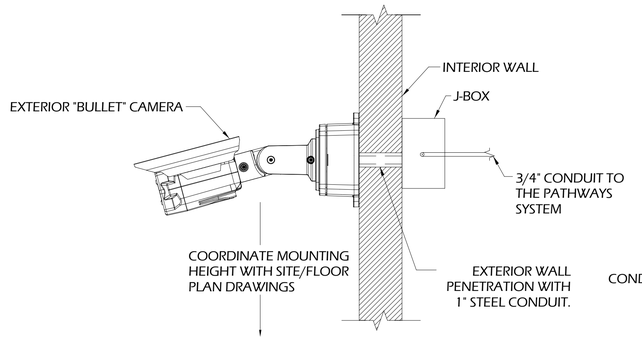

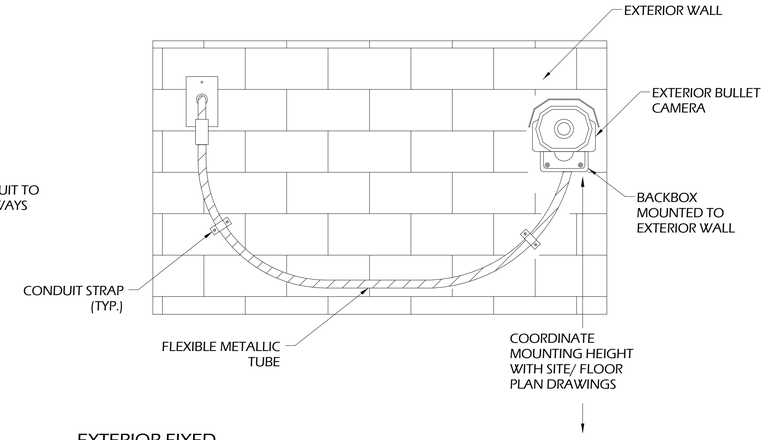

DETAIL 2 — EXTERIOR FIXED WALL MOUNT 'BULLET' CAMERA BOX CAMERA ENCLOSURE

NOT TO SCALE

CAMERA SCHEDULE

CAMERA NO.	CAMERA TYPE	LENS TYPE	MOUNTING REQUIREMENTS	REFERENCE SHEET	REFERENCE DETAIL	FIELD OF VIEW
C-1	BULLET CAMERA	2MP	EXTERIOR WALL MOUNT	LV-201.1	2/LV-502	BUILDING EXTERIOR
C-2	BULLET CAMERA	2MP	EXTERIOR WALL MOUNT	LV-201.1	2/LV-502	BUILDING EXTERIOR
C-3	180° MULTI-SENSOR	9MP	STRUCTURAL PENDANT MOUNT	LV-201.1	1/LV-502	BUILDING INTERIOR
C-4	180° MULTI-SENSOR	9MP	STRUCTURAL PENDANT MOUNT	LV-201.2	1/LV-502	BUILDING INTERIOR
C-5	BULLET CAMERA	2MP	EXTERIOR WALL MOUNT	LV-201.2	2/LV-502	BUILDING EXTERIOR
C-6	BULLET CAMERA	2MP	EXTERIOR WALL MOUNT	LV-201.2	2/LV-502	BUILDING EXTERIOR
C-7	BULLET CAMERA	2MP	EXTERIOR WALL MOUNT	LV-201.2	2/LV-502	BUILDING EXTERIOR

DETAILS 3 — CAMERA SCHEDULE

N.T.S.

J&A
ENGINEERING CONSULTANTS
4994 LOWER ROSWELL ROAD, SUITE ONE
MARIETTA, GEORGIA 30068
PHONE: (770) 817-4220
FAX: (678) 234-6878

Menefee Architecture | Architecture Planning Design
1075 Brady Ave NW Atlanta GA 30318 | t 404.876.1011

COPYRIGHT

This drawing and all reproductions are copyrighted and the property of Menefee Architecture LLC and may not be used in any way without their permission.

COPYRIGHT 2018

ROME TENNIS - INDOOR COURTS
ROME, GEORGIA 30165

DRAWN BY	CHECKED BY
Author	Checker

DATE
2019-02-15

REVISIONS	
NUMBER	DATE

TITL
DETAILS

PROJECT NUMBER
18060

SHEET NUMBER
LV-502

75% CONSTRUCTION DOCUMENTS 2/15/2019