EROSION, SEDIMENTATION & POLLUTION CONTROL PLAN

MOUNT BERRY MULTI-USE TRAIL

— PHASE I —

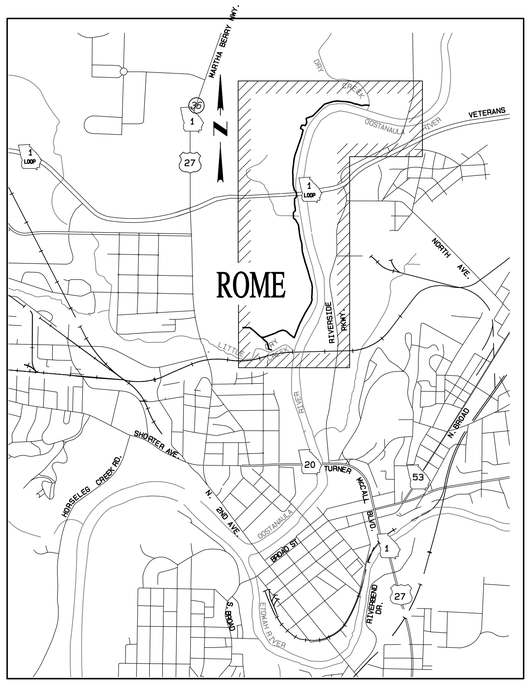

(9) LOCATION MAP

(36) GRAPHIC SCALE 1"=2000'

0 1000 2000 FEET

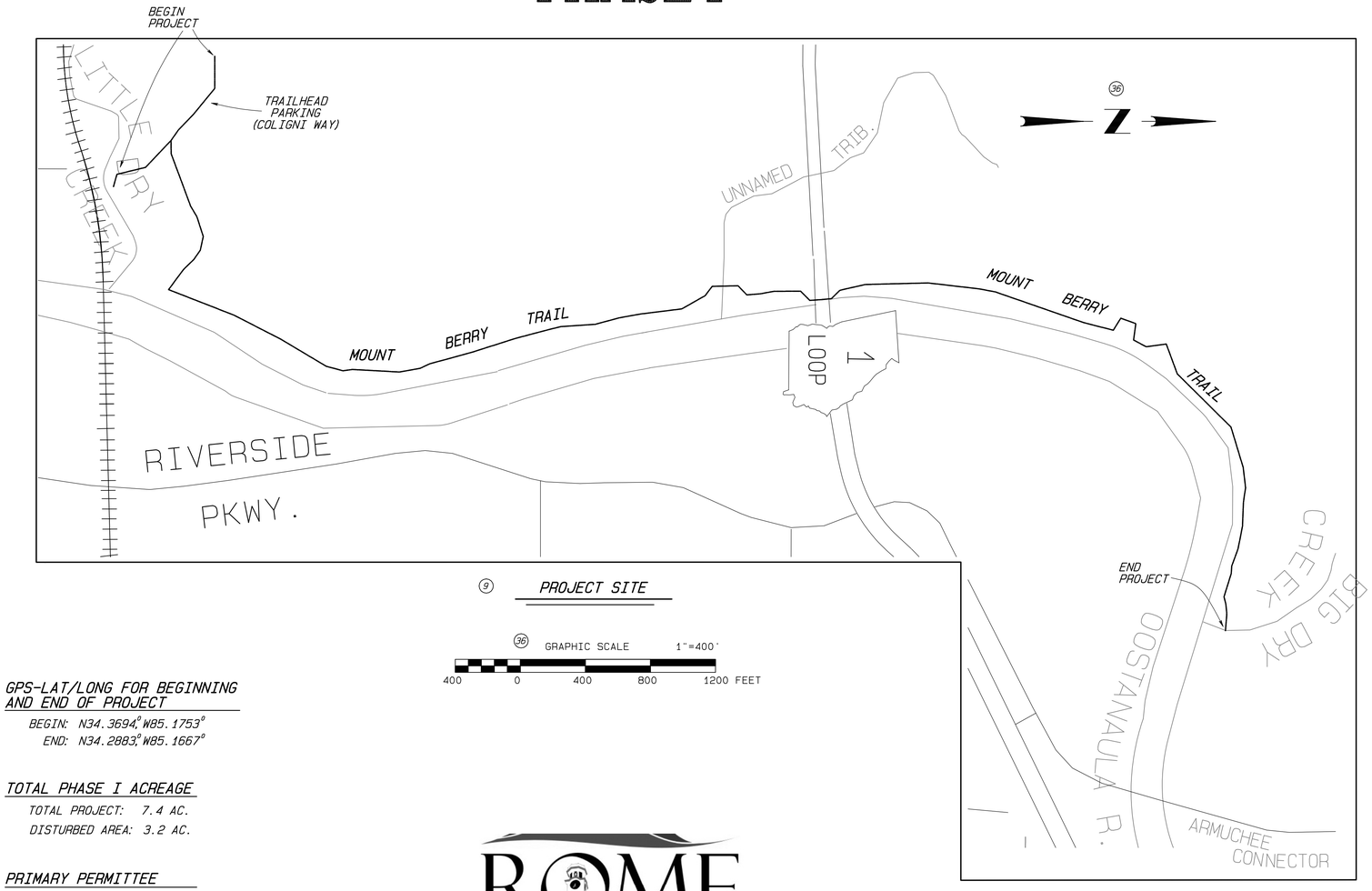

(9) PROJECT SITE

(36) GRAPHIC SCALE 1"=400'

400 0 400 800 1200 FEET

INDEX OF DRAWINGS

SHEET NO.	DRAWING DESCRIPTION
18	COVER SHEET
19	INFRASTRUCTURE CHECKLIST
20	GENERAL NOTES
21-26	BMP LOCATIONS
27	BMP DETAILS

(11) ***"I certify under penalty of law that this Plan was prepared after a site visit to the locations described herein by myself or my authorized agent, under my supervision."***

AARON W. CARROLL, P.E. 21014
GSWCC LEVEL II CERT.NO. 0000004427 DATE: 10-3-2018

(12) ***"I certify that the permittee's Erosion, Sedimentation and Pollution Control Plan provides for an appropriate and comprehensive system of best management practices required by the Georgia Water Quality Control Act and the document "Manual for Erosion and Sediment Control in Georgia" (Manual) published by the State Soil and Water Conservation Commission as of January 1 of the year in which the land-disturbing activity was permitted, provides for the sampling of the receiving water(s) or the sampling of the storm water outfalls and that the designed system of best management practices and sampling methods is expected to meet the requirements contained in the General NPDES Permit No. GAR100002."***

AARON W. CARROLL, P.E. 21014 DATE: 10-3-2018
GSWCC LEVEL II CERT.NO. 0000004427

(13) ***"I certify that the permittee's Erosion, Sedimentation and Pollution Control Plan provides for the monitoring of: (a) all perennial and intermittent streams and other water bodies shown on the USGS topographic map and all other field verified perennial and intermittent streams and other water bodies, or (b) where any such specific identified perennial or intermittent streams and other water body is not proposed to be sampled, I have determined in my professional judgment, utilizing the factors required in the General NPDES Permit No. GAR 100002, that the increase in turbidity of each specific identified sampled receiving water will be representative of the increase in the turbidity of a specific identified un-sampled receiving water."***

AARON W. CARROLL, P.E. 21014 DATE: 10-3-2018
GSWCC LEVEL II CERT.NO. 0000004427

(6) GPS-LAT/LONG FOR BEGINNING AND END OF PROJECT

BEGIN: N34.3694°, W85.1753°
END: N34.2883°, W85.1667°

(5) TOTAL PHASE I ACREAGE

TOTAL PROJECT: 7.4 AC.
DISTURBED AREA: 3.2 AC.

(4) PRIMARY PERMITTEE

CITY OF ROME ENGINEERING DEPARTMENT
200 VAUGHN RD.
ROME, GEORGIA 30161
(706) 236-4466

(2) AARON W. CARROLL, P.E. 21014 DATE: 10-3-2018
GSWCC LEVEL II CERT.NO. 0000004427

(3) RESPONSIBLE OFFICIAL AND 24 HOUR CONTACT: MR. KIRK MILAM, P.E. (706)252-5084

ROME GEORGIA EST. 1834

ENGINEERING SERVICES DEPARTMENT
200 VAUGHN ROAD, ROME, GEORGIA 20161
(706)236-4466 acarroll@romega.us

(7) JULY 2018

GEORGIA REGISTERED No. 21014 PROFESSIONAL ENGINEER AARON W. CARROLL

(7)

REVISIONS			
NO.	DESCRIPTION	REQUESTED BY	DATE
1.			
2.			
3.			
4.			
5.			

THIS LINE |——| IS ONE INCH LONG PLOTTED FULL SCALE.

(1)

EROSION, SEDIMENTATION & POLLUTION CONTROL PLAN CHECKLIST
INFRASTRUCTURE CONSTRUCTION PROJECTS

SWCD: Coosa River

Project Name: Mount Berry Multi-Use Trail **Address:** N/A (Linear project)
City/County: Rome, Floyd County **Date on Plans:** July 2018

TO BE SHOWN ON ES&PC PLAN

Plan Page #	Included Y/N	
19		1 The applicable Erosion, Sedimentation and Pollution Control Plan Checklist established by the Commission as of January 1 of the year in which the land-disturbing activity was permitted. (The completed Checklist must be submitted with the ES&PC Plan or the Plan will not be reviewed)
18-27		2 Level II certification number issued by the Commission, signature and seal of the certified design professional. (Signature, seal and Level II number must be on each sheet pertaining to ES&PC Plan or the Plan will not be reviewed)
18		3 The name and phone number of the 24-hour local contact responsible for erosion, sedimentation and pollution controls.
18		4 Provide the name, address and phone number of primary permittee.
18		5 Note total and disturbed acreage of the project or phase under construction.
18		6 Provide the GPS locations of the beginning and end of the Infrastructure project. Give the Latitude and Longitude in decimal degrees
18-27		7 Initial date of the Plan and the dates of any revisions made to the Plan including the entity who requested the revisions.
20		8 Description of the nature of construction activity.
18		9 Provide vicinity map showing site's relation to surrounding areas. Include designation of specific phase, if necessary.
20		10 Identify the project receiving waters and describe all sensitive adjacent areas including streams, lakes, residential areas, wetlands, marshlands, etc. which may be affected
18		11 Design professional's certification statement and signature that the site was visited prior to development of the ES&PC Plan as stated on page 15 of the permit.
18		12 Design professional's certification statement and signature that the permittee's ES&PC Plan provides for an appropriate and comprehensive system of BMPs and sampling to meet permit requirements as stated on page 15 of the permit.*
18		13 Design professional certification statement and signature that the permittee's ES&PC Plan provides for representative sampling as stated on page 26 of permit as applicable.*
20		14 Clearly note the statement that "This design professional who prepared the ES&PC Plan is to inspect the installation of the initial sediment storage requirements, perimeter control BMPs, and sediment basins in accordance with part IV.A.5. within 7 days after installation.**
20		15 Clearly note the statement that "Non-exempt activities shall not be conducted within the 25 or 50-foot undisturbed stream buffers as measured from the point of wrested vegetation or within 25-feet of the coastal marshland buffer as measured from the Jurisdictional Determination Line without first acquiring the necessary variances and permits.*
20		16 Provide a description of any buffer encroachments and indicate whether a buffer variance is required.
20		17 Clearly note the statement that "Amendments/revisions to the ES&PC Plan which have a significant effect on BMPs with a hydraulic component must be certified by the design professional.**
20		18 Clearly note the statement that "Waste materials shall not be discharged to waters of the State, except as authorized by a section 404 permit.**
20		19 Clearly note statement that **"The escape of sediment from the site shall be prevented by the installation of erosion and sediment control measures and practices prior to land disturbing activities."*
20		20 Clearly note statement that "Erosion control measures will be maintained at all times. If full implementation of the approved Plan does not provide for effective erosion control, additional erosion and sediment control measures shall be implemented to control or treat the sediment source.*
20		21 Clearly note the statement "Any disturbed area left exposed for a period greater than 14 days shall be stabilized with mulch or temporary seeding.*
NA		22 Any construction activity which discharges storm water into an Impaired Stream Segment, or within 1 linear mile upstream of and within the same watershed as, any portion of an Biota Impaired Stream Segment must comply with Part III. C. of the Permit. Include the completed Appendix 1 listing all the BMPs that will be used for those areas of the site which discharge to the Impaired Stream Segment.*
NA		23 If a TMDL implementation Plan for sediment has been finalized for the Impaired Stream Segment (identified in item 22 above) at least six months prior to submittal of NOI, the ES&PC Plan must address any site-specific conditions or requirements included in the TMDL Implementation Plan.*
20		24 BMPs for concrete washdown of tools, concrete mixer chutes, hoppers and the rear of the vehicles. Washout of the drum at the construction site is prohibited.*
20		25 Provide BMPs for the remediation of all petroleum spills and leaks.
NA		26 Description of the measures that will be installed during the construction process to control pollutants in storm water that will occur after construction operations have been completed.*
NA		27 Description of the practices that will be used to reduce the pollutants in storm water discharges.*
19		28 Description and chart or timeline of the intended sequence of major activities which disturb soils for the major portions of the site (i.e., initial perimeter and sediment storage BMPs, clearing and grubbing activities, excavation activities, utility activities, temporary and final stabilization).
20		29 Provide complete requirements of inspections and record keeping by the primary permittee.*
19		30 Provide complete requirements of sampling frequency and reporting of sampling results.*
20		31 Provide complete details for retention of records as per Part IV.F. of the permit.*
19		32 Description of analytical methods to be used to collect and analyze the samples from each location.*
19		33 Appendix B rationale for NTU values at all outfall sampling points where applicable.*
19		34 Delineate all sampling locations, perennial and intermittent streams and other water bodies into which storm water is discharged also provide a summary chart of the justification and analysis for the representative sampling as applicable.*
27		35 A description of appropriate controls and measures that will be implemented at the construction site including: (1) initial sediment storage requirements and perimeter control BMPs, (2) intermediate grading and drainage BMPs, and (3) final BMPs. For construction sites where there will be no mass grading and the initial perimeter control BMPs, intermediate grading and drainage BMPs, and final BMPs are the same, the plan may combine all of the BMPs into a single phase.*
18,21-27		36 Graphic scale and North arrow.
21-26		37 Existing and proposed contour lines with contour lines drawn at an interval in accordance with the following:

Existing Contours	USGS 1": 2000' Topographical Sheets
Proposed Contours	1" = 400' Centerline Profile

NA		38 Use of alternative BMPs whose performance has been documented to be equivalent to or superior to conventional BMPs as certified by a Design Professional (unless disapproved by EPD or the Georgia Soil and Water Conservation Commission). Please refer to the Alternative BMP Guidance Document found at www.gaswcc.org.
NA		39 Use of alternative BMP for application to the Equivalent BMP List. Please refer to Appendix A-2 of the Manual for Erosion & Sediment Control in Georgia 2016 Edition.*
22-26		40 Delineation of the applicable 25-foot or 50-foot undisturbed buffers adjacent to State waters and any additional buffers required by the Local Issuing Authority. Clearly note and delineate all areas of impact.
22-26		41 Delineation of on-site wetlands and all State waters located on and within 200 feet of the project site.
NA		42 Delineation and acreage of contributing drainage basins on the project site.
NA		43 Delineate on-site drainage and off-site watersheds using USGS 1" :2000' topographical sheets.
20		44 An estimate of the runoff coefficient or peak discharge flow of the site prior to and after construction activities are completed.
20		45 Storm-drain pipe and weir velocities with appropriate outlet protection to accommodate discharges without erosion. Identify/Delineate all storm water discharge points.
20-27		46 Soil series for the project site and their delineation.
21-26		47 The limits of disturbance for each phase of construction.
NA		48 Provide a minimum of 67 cubic yards of sediment storage per acre drained using a temporary sediment basin, retrofitted detention pond, and/or excavated inlet sediment traps for each common drainage location. Sediment storage volume must be in place prior to and during all land disturbance activities until final stabilization of the site has been achieved. A written justification explaining the decision to use equivalent controls when a sediment basin is not attainable must be included in the plan for each common drainage location in which a sediment basin is not provided. A written justification as to why 67 cubic yards of storage is not attainable must also be given. Worksheets from the Manual must be included for structural BMPs and all calculations used by the design professional to obtain the required sediment storage when using equivalent controls. When discharging from sediment basins and impoundments, permittees are required to utilize outlet structures that withdraw water from the surface, unless infeasible. If outlet structures that withdraw water from the surface are not feasable, a written justification explaining this decision must be included in the plan.
21-26		49 Location of Best Management Practices that are consistent with and no less stringent than the Manual for Erosion and Sediment Control in Georgia. Use uniform coding symbols from the Manual, Chapter 6, with legend.
27		50 Provide detailed drawings for all structural practices. Specifications must, at a minimum, meet the guidelines set forth in the Manual for Erosion and Sediment Control in Georgia.
27		51 Provide vegetative plan, noting all temporary and permanent vegetative practices. Include species, planting dates and seeding, fertilizer, lime and mulching rates. Vegetative plan shall be site specific for appropriate time of year that seeding will take place and for the appropriate geographic region of Georgia.

*If using this checklist for a project that is less than 1 acre and not part of a common development but within 200 ft of a perennial stream the * checklist items would be N/A.

Effective January 1, 2018

COVERAGE UNDER PERMIT NO. GAR100002

CONSTRUCTION PROJECTS THAT WILL RESULT IN CONTIGUOUS LAND DISTURBANCES EQUAL TO OR GREATER THAN ONE (1) ACRE OCCURRING AFTER THE EFFECTIVE DATE OF THIS PERMIT, (HENCEFORTH REFERRED TO AS STORM WATER DISCHARGES FROM CONSTRUCTION ACTIVITIES), EXCEPT FOR DISCHARGES IDENTIFIED UNDER PART I.C.3. CONTIGUOUS MEANS AREAS OF LAND DISTURBANCES THAT ARE IN ACTUAL CONTACT TO CREATE A CONNECTED, UNINTERRUPTED AREA OF LAND DISTURBANCE. HOWEVER, FOR PURPOSES OF THIS PERMIT, CONTIGUOUS AREAS OF LAND DISTURBANCES INCLUDE THOSE AREAS OF LAND DISTURBANCES SOLELY SEPARATED BY DRILLING AND BORING ACTIVITIES, WATERS OF THE STATE AND ADJACENT STATE-MANDATED BUFFERS, ROADWAYS AND/OR RAILWAYS. IN ADDITION, CONTIGUOUS AREAS OF LAND DISTURBANCES INCLUDE ALL AREAS OF LAND DISTURBANCES AT A SOLE ROADWAY INTERSECTION AND/OR JUNCTION;

LIMITATIONS ON COVERAGE (PART I.C.3.): THE FOLLOWING STORM WATER DISCHARGES FROM CONSTRUCTION SITES ARE NOT AUTHORIZED BY THIS PERMIT:

A. STORM WATER DISCHARGES ASSOCIATED WITH AN INDUSTRIAL ACTIVITY THAT ORIGINATE FROM THE SITE AFTER CONSTRUCTION ACTIVITIES HAVE BEEN COMPLETED AND THE SITE HAS UNDERGONE FINAL STABILIZATION;

B. DISCHARGES THAT ARE MIXED WITH SOURCES OF NON-STORM WATER OTHER THAN DISCHARGES WHICH ARE IDENTIFIED IN PART III.A.2. OF THIS PERMIT AND WHICH ARE IN COMPLIANCE WITH PART IV.D.7. (NON-STORM WATER DISCHARGES) OF THIS PERMIT;

C. STORM WATER DISCHARGES ASSOCIATED WITH INDUSTRIAL ACTIVITY THAT ARE SUBJECT TO AN EXISTING NPDES INDIVIDUAL OR GENERAL PERMIT. SUCH DISCHARGES MAY BE AUTHORIZED UNDER THIS PERMIT AFTER AN EXISTING PERMIT EXPIRES PROVIDED THE EXISTING PERMIT DID NOT ESTABLISH NUMERIC LIMITATIONS FOR SUCH DISCHARGES; AND

D. STORM WATER DISCHARGES FROM CONSTRUCTION SITES THAT THE DIRECTOR (EPD) HAS DETERMINED TO BE OR MAY REASONABLY BE EXPECTED TO BE CONTRIBUTING TO A VIOLATION OF A WATER QUALITY STANDARD.

COMPLIANCE WITH WATER QUALITY STANDARDS (PART I.C.4.): NO DISCHARGES AUTHORIZED BY THIS PERMIT SHALL CAUSE VIOLATIONS OF GEORGIA'S IN-STREAM WATER QUALITY STANDARDS AS PROVIDED BY THE RULES AND REGULATIONS FOR WATER QUALITY CONTROL, CHAPTER 391-3-6-.03.

MANAGEMENT PRACTICES AND PERMIT VIOLATIONS (PART III.D.)

1. *BEST MANAGEMENT PRACTICES, AS SET FORTH IN THIS PERMIT, ARE REQUIRED FOR ALL CONSTRUCTION ACTIVITIES, AND MUST BE IMPLEMENTED IN ACCORDANCE WITH THE DESIGN SPECIFICATIONS CONTAINED IN THE "MANUAL FOR EROSION AND SEDIMENT CONTROL IN GEORGIA" (MANUAL) PUBLISHED BY THE STATE SOIL AND WATER CONSERVATION COMMISSION AS OF JANUARY 1 OF THE YEAR IN WHICH THE LAND-DISTURBING ACTIVITY WAS PERMITTED TO PREVENT OR REDUCE THE POLLUTION OF WATERS OF GEORGIA. PROPER DESIGN, INSTALLATION, AND MAINTENANCE OF BEST MANAGEMENT PRACTICES SHALL CONSTITUTE A COMPLETE DEFENSE TO ANY ACTION BY THE DIRECTOR OR TO ANY OTHER ALLEGATION OF NONCOMPLIANCE WITH PART III.D.3. AND PART III.D.4.*
2. *EXCEPT AS REQUIRED TO INSTALL THE INITIAL SEDIMENT STORAGE REQUIREMENTS AND PERIMETER CONTROL BMPS AS DESCRIBED IN PART IV.D.3., THE INITIAL SEDIMENT STORAGE REQUIREMENTS AND PERIMETER CONTROL BMPS MUST BE INSTALLED AND IMPLEMENTED PRIOR TO CONDUCTING ANY OTHER CONSTRUCTION ACTIVITIES (E.G., CLEARING, GRUBBING AND GRADING) WITHIN THE CONSTRUCTION SITE OR WHEN APPLICABLE, WITHIN PHASED SUB-PARTS OR SEGMENTS OF THE CONSTRUCTION SITE. FAILURE TO COMPLY SHALL CONSTITUTE A VIOLATION OF THIS PERMIT FOR EACH DAY ON WHICH CONSTRUCTION ACTIVITIES OCCUR. THE DESIGN PROFESSIONAL WHO PREPARED THE PLAN MUST INSPECT THE INITIAL SEDIMENT STORAGE REQUIREMENTS AND PERIMETER CONTROL BMPS IN ACCORDANCE WITH PART IV.A.5. WITHIN SEVEN (7) DAYS AFTER INSTALLATION.*
3. *FAILURE TO PROPERLY DESIGN, INSTALL, OR MAINTAIN BEST MANAGEMENT PRACTICES SHALL CONSTITUTE A VIOLATION OF THIS PERMIT FOR EACH DAY ON WHICH SUCH FAILURE OCCURS. BMP MAINTENANCE AS A RESULT OF THE PERMITTEE'S ROUTINE INSPECTIONS SHALL NOT BE CONSIDERED A VIOLATION FOR THE PURPOSES OF THIS PARAGRAPH. IF DURING THE COURSE OF THE PERMITTEE'S ROUTINE INSPECTION BMP FAILURES ARE OBSERVED WHICH HAVE RESULTED IN SEDIMENT DEPOSITION INTO WATERS OF THE STATE, THE PERMITTEE SHALL CORRECT THE BMP FAILURES AND SHALL SUBMIT A SUMMARY OF THE VIOLATIONS TO EPD IN ACCORDANCE WITH PART V.A.2. OF THIS PERMIT.*
4. *A DISCHARGE OF STORM WATER RUNOFF FROM DISTURBED AREAS WHERE BEST MANAGEMENT PRACTICES HAVE NOT BEEN PROPERLY DESIGNED, INSTALLED, AND MAINTAINED SHALL CONSTITUTE A SEPARATE VIOLATION FOR EACH DAY ON WHICH SUCH DISCHARGE RESULTS IN THE TURBIDITY OF RECEIVING WATER(S) BEING INCREASED BY MORE THAN TEN (10) NEPHELOMETRIC TURBIDITY UNITS FOR WATERS CLASSIFIED AS TROUT STREAMS OR MORE THAN TWENTY-FIVE (25) NEPHELOMETRIC TURBIDITY UNITS FOR WATERS SUPPORTING WARM WATER FISHERIES, REGARDLESS OF A PERMITTEE'S CERTIFICATION UNDER PART II.B.1.I.*

(28)

ANTICIPATED ACTIVITY SCHEDULE

MONTHS	1	2	3	4	5	6
INSTALL SEDIMENT CONTROLS						
TRAILHEAD CLEAR & GRADING						
CONSTRUCT CATTLE FENCE						
CONSTRUCT BRIDGE NO. 1						
CONSTRUCT BRIDGE NO. 2						
GRADE & CONSTRUCT TRAIL						
PERMANENT GRASSING						
REMOVE SILT FENCE						

(30) (32) (33) (34)

SAMPLING.

GRADING FOR THIS PROJECT IS CONFINED TO THE REMOVAL OF TOPSOIL IN ORDER TO LEVEL AND CONSTRUCT A 10-FOOT GRAVEL TRAIL WITH NO MASS GRADING TAKING PLACE. ALL FLOW IN THE AREA OF THE PROJECT PRIOR TO AND AFTER CONSTRUCTION IS, AND WILL BE IN A SHEET FLOW REGIME. AREAS ADJACENT TO THE PROPOSED TRAIL CONSIST OF WOODED AREAS, AND PASTURE LAND WITH PERMANENT AND/OR EQUIVALENT PERMANENT STABILIZATION AS DEFINED WITHIN THE GENERAL NPDES PERMIT NO. GAR100002. IN ACCORDANCE WITH PART IV.D.6.c.(1)(g) OF THE CURRENT GENERAL NPDES PERMIT NO. GAR100002, SAMPLING ON THIS INFRASTRUCTURE PROJECT IS NOT REQUIRED.

AARON W. CARROLL, P.E. 21014 *DATE:* 10-3-2018
GSWCC LEVEL II CERT. NO. 0000004427

GEORGIA REGISTERED No. 21014 PROFESSIONAL ENGINEER AARON W. CARROLL

(2) *AARON W. CARROLL, P.E. 21014* *DATE:* 10-3-2018
GSWCC LEVEL II CERT.NO. 0000004427

(4) *RESPONSIBLE OFFICIAL AND 24 HOUR CONTACT:* *MR. KIRK MILAM, P.E.* *(706)252-5084*

(7) **REVISIONS**

NO.	DESCRIPTION	DATE
1.		
2.		
3.		
4.		
5.		

CITY OF ROME, GEORGIA
ENGINEERING DEPARTMENT

MOUNT BERRY TRAIL
EROSION, SEDIMENT & POLLUTION CONTROL PLAN - CHECKLIST

SCALE: AS SHOWN **DRAWN BY:** WKM
DATE: JULY 2018 (7) **FINAL APPROVAL:**
JOB NO. 1405 **SHEET** 19 **OF** 27

THIS LINE ├──┤ IS ONE INCH LONG PLOTTED FULL SCALE.

GENERAL NOTES:

(8) 1. THE EXISTING SITE IS LINEAR AND TRAVERSES GRAVEL DRIVES, UNIMPROVED FIELD ROADS, WOODED AREAS, GRASSED PASTURE AND SEWER EASEMENTS. THE CONSTRUCTION PROPOSED IS LIMITED CLEARING, STRIPPING AND LEVELING FOR THE TRAIL WIDTH AND PLACEMENT OF A CRUSHED STONE SURFACE AT-GRADE.

(10) 2. THE RECEIVING WATERS OF THIS PROJECT INCLUDE LITTLE DRY CREEK, A MANMADE POND ADJACENT TO LITTLE DRY CREEK, BIG DRY CREEK AND THE OOSTANAULA RIVER. NO OTHER ADJACENT STREAMS, LAKES, RESIDENTIAL AREAS, WETLANDS, ETC. WILL BE AFFECTED.

3. ACCORDING TO FLOOD INSURANCE RATE MAP 13115C0191E AND 13115C0193E DATED SEPTEMBER 25, 2009 THE PROPERTY IS LOCATED IN FLOOD ZONE AE WHICH IS AN AREA DETERMINED TO BE SUBJECT TO INUNDATION BY THE 1% ANNUAL CHANCE FLOOD.

4. ALL EROSION AND SEDIMENT CONTROL MEASURES SHALL CONFORM TO THE GUIDELINES OF THE "MANUAL FOR EROSION AND SEDIMENT CONTROL IN GEORGIA, 2016 EDITION".

(14) 5. THE PROJECT DESIGN PROFESSIONAL WHO PREPARED THE ES&PC PLAN IS TO INSPECT THE INSTALLATION OF SEDIMENT STORAGE REQUIREMENTS AND PERIMETER CONTROL BMPs FOR THE "INITIAL SEGMENT" OF THE LINEAR INFRASTRUCTURE PROJECT AND ALL SEDIMENT BASINS WITHIN THE ENTIRE LINEAR INFRASTRUCTURE PROJECT IN ACCORDANCE WITH PART IV A.5. WITHIN SEVEN (7) DAYS AFTER INSTALLATION. NO OTHER CONSTRUCTION ACTIVITIES SHALL OCCUR UNTIL THE PROJECT PROFESSIONAL APPROVES THE INSTALLATION OF SAID EROSION CONTROL MEASURES. IF UNFORSEEN CONDITIONS EXIST IN THE FIELD THAT WARRANT ADDITIONAL EROSION CONTROL MEASURES, THE CONTRACTOR MUST CONSTRUCT ANY ADDITIONAL EROSION CONTROL DEVICES DEEMED NECESSARY BY THE PROJECT PROFESSIONAL DURING THE SITE INSPECTION.

(15) 6. NON-EXEMPT ACTIVITIES SHALL NOT BE CONDUCTED WITHIN THE 25 OR 50-FOOT UNDISTURBED STREAM BUFFERS AS MEASURED FROM THE POINT OF WRESTED VEGETATIOIN WITHOUT FIRST ACQUIRING THE NECESSARY VARIANCES AND PERMITS.

(16) 7. NO CONSTRUCTION IS PLANNED WITHIN THE 25-FOOT STATE WATERS BUFFER. STREAM CROSSINGS ARE PERMITTED UNDER THE GENERAL VARIANCE ISSUED BY THE ENVIRONMENTAL PROTECTION DIVISION.

(17) 8. AMENDMENTS/REVISIONS TO THE ES&PC PLAN WHICH HAVE A SIGNIFICANT EFFECT ON BMPs WITH A HYDRAULIC COMPONENT MUST BE CERTIFIED BY THE DESIGN PROFESSIONAL. ALL REVISIONS OR AMENDMENTS SHALL BE SUBMITTED TO THE LOCAL ISSUING AUTHORITY FOR REVIEW.

(18) 9. WASTE MATERIALS, INCLUDING BUT NOT LIMITED TO WASTE BUILDING MATERIALS, CONSTRUCTION AND DEMOLITION DEBRIS, CONCRETE WASHOUT OR EXCAVATED SEDIMENT, SHALL NOT BE DISCHARGED TO WATERS OF THE STATE, EXCEPT AS AUTHORIZED BY A SECTION 404 PERMIT.

(19) 10. THE ESCAPE OF SEDIMENT FROM THE SITE SHALL BE PREVENTED BY THE INSTALLATION OF EROSION AND SEDIMENT CONTROL MEASURES AND PRACTICES PRIOR TO LAND DISTURBING ACTIVITIES.

(20) 11. EROSION CONTROL MEASURES WILL BE MAINTAINED AT ALL TIMES. IF FULL IMPLEMENTATION OF THE APPROVED PLAN DOES NOT PROVIDE FOR EFFECTIVE EROSION CONTROL, ADDITIONAL EROSION AND SEDIMENT CONTROL MEASURES SHALL BE IMPLEMENTED TO CONTROL OR TREAT THE SEDIMENT SOURCE.

(21) 12. ANY DISTURBED AREA LEFT EXPOSED FOR A PERIOD GREATER THAN 14 DAYS SHALL BE STABILIZED WITH MULCH OR TEMPORARY SEEDING. ALL DISTURBED AREAS LEFT MULCHED MORE THAN 30 DAYS SHALL BE STABILIZED WITH TEMPORARY VEGETATION.

(45) 13. NO STORM DRAIN PIPES WILL BE INSTALLED AS PART OF THIS PROJECT.

(44) 14. THE INCREASE IN IMPERVIOUS AREA IS LESS THAN 3.6 PERCENT OF THE TOTAL PROJECT ACREAGE. THE RESULTING CHANGE IN RUNOFF COEFFICIENT AS A RESULT OF THE PROJECT IS CONSIDERED NEGLIGIBLE.

(35) INITIAL EROSION CONTROL MEASURES:

THE FOLLOWING INITIAL EROSION CONTROL MEASURES SHALL BE IMPLEMENTED PRIOR TO ANY OTHER CONSTRUCTION ACTIVITY:

1. THE CONSTRUCTION EXIT SHALL BE PLACED AS SHOWN ON THE PLANS.
2. IMMEDIATELY AFTER THE ESTABLISHMENT OF CONSTRUCTION EXIT, ALL PERIMETER EROSION CONTROL AND STORMWATER MANAGEMENT DEVICES SHALL BE INSTALLED AS SHOWN ON THE ES&PC PLAN. ALL SILT FENCES MUST MEET THE REQUIREMENTS OF SECTION 171-TEMPORARY SILT FENCE FOR THE DEPARTMENT OF TRANSPORTATION, STATE OF GEORGIA, STANDARD SPECIFICATIONS, LATEST EDITION.
3. TREE PROTECTION FENCING SHALL BE INSTALLED PRIOR TO THE START OF ANY LAND DISTURBING ACTIVITY.
4. SANITARY WASTES: A MINIMUM OF ONE PORTABLE SANITARY UNIT WILL BE PROVIDED FOR EVERY TEN (10) WORKERS ON THE SITE. ALL SANITARY WASTE WILL BE COLLECTED FROM THE PORTABLE UNITS A MINIMUM OF ONE TIME PER WEEK BY A LICENSED PORTABLE FACILITY PROVIDER IN COMPLETE COMPLIANCE WITH LOCAL AND STATE REGULATIONS.
   a. ALL SANITARY WASTE UNITS WILL BE LOCATED IN AN AREA WHERE THE LIKELIHOOD OF THE UNIT CONTRIBUTING TO STORMWATER DISCHARGE IS NEGLIGIBLE.
   b. ADDITIONAL CONTAINMENT BMP'S MUST BE IMPLEMENTED, SUCH AS GRAVEL BAGS OR SPECIALLY DESIGNED PLASTIC SKID CONTAINERS AROUND THE BASE TO PREVENT WASTES FROM CONTRIBUTING TO STORM WATER DISCHARGES.
   c. THE LOCATION OF WASTE UNITS MUST BE IDENTIFIED ON THE EROSION CONTROL PLAN BY THE CONTRACTOR ONCE THE LOCATIONS HAVE BEEN DETERMINED.

(35) CONSTRUCTION PHASE NOTES:

1. THE CONSTRUCTION EXIT SHALL BE MAINTAINED IN A CONDITION WHICH WILL PREVENT THE TRACK OR FLOW OF MUD ONTO PUBLIC RIGHT-OF-WAY. THIS MAY REQUIRE PERIODIC TOP DRESSING WITH 1"-3" OF STONE, AS CONDITIONS DEMAND. ALL MATERIALS SPILLED, DROPPED, WASHED OR TRACKED FROM A VEHICLE ONTO PUBLIC ROADWAY OR INTO STORM DRAIN MUST BE REMOVED IMMEDIATELY.
2. ALL POLLUTANTS FROM WASTE DISPOSAL PRACTICES, SOIL ADDITIVES, REMEDIATION OF SPILLS AND LEAKS OF PETROLEUM PRODUCTS, CONCRETE TRUCK WASHOUT, ETC., SHOULD ANY OF THESE OCCUR, WILL BE CONTROLLED BY THE IMPLEMENTATION OF APPROPRIATE BEST MANAGEMENT PRACTICES. THE SITE WILL BE IN COMPLIANCE WITH ALL APPLICABLE STATE AND LOCAL WASTE DISPOSAL, SANITARY SEWER OR SEPTIC SYSTEM REGULATIONS.
3. EQUIPMENT MAINTENANCE AREAS WILL BE LOCATED AWAY FROM STATE WATERS, NATURAL DRAINS AND STORMWATER DRAINAGE INLETS. IN ADDITION, TEMPORARY FUELING TANKS SHALL HAVE A SECONDARY CONTAINMENT LINER TO PREVENT/MINIMIZE SITE CONTAMINATION. DISCHARGE OF OILS, FUELS AND LUBRICANTS IS PROHIBITED. PROPER DISPOSAL METHODS WILL INCLUDE COLLECTION IN A SUITABLE CONTAINER AND DISPOSAL AS REQUIRED BY LOCAL AND STATE REGULATIONS.
4. ALL PAINTS, FINISHES OR SOLVENT PRODUCTS WILL BE STORED IN TIGHTLY SEALED ORIGINAL CONTAINERS WHEN NOT IN USE. EXCESS PRODUCTS WILL NOT BE DISCHARGED TO THE STORMWATER COLLECTION SYSTEM. EXCESS PRODUCT MATERIALS USED WITH THESE PRODUCTS AND PRODUCT CONTAINERS WILL BE DISPOSED OF ACCORDING TO MANUFACTURER'S SPECIFICATIONS AND RECOMMENDATIONS.

(24) 5. NO CONCRETE TRUCKS WILL BE ALLOWED TO WASH OR DISCHARGE SURPLUS CONCRETE OR DRUM WASH WATER ONSITE.

6. FERTILIZER/HERBICIDES WILL BE APPLIED AT RATES THAT DO NOT EXCEED THE MANUFACTURER'S SPECIFICATIONS OR ABOVE THE GUIDELINES SET FORTH IN THE CROP ESTABLISHMENT OR IN THE GSWCC MANUAL FOR EROSION AND SEDIMENT CONTROL IN GEORGIA. ANY STORAGE OF THESE MATERIALS WILL BE UNDER-ROOF IN SEALED CONTAINERS.
7. NO BUILDING OR CONSTRUCTION MATERIALS WILL BE BURIED OR DISPOSED OF ONSITE. ALL SUCH MATERIAL WILL BE DISPOSED OF IN A PERMITED CONSTRUCTION AND DEMOLITION OR MUNICIPAL WASTE LANDFILL.

(25) 8. SPILL CLEANUP AND CONTROL PRACTICES: LOCAL, STATE AND MANUFACTURER'S RECOMMENDED METHODS FOR SPILL CLEANUP WILL BE CLEARLY POSTED AND PROCEDURES WILL BE MADE AVAILABLE TO SITE PERSONNEL. MATERIAL AND EQUIPMENT NECESSARY FOR SPILL CLEANUP WILL BE KEPT IN THE MATERIAL STORAGE AREAS. TYPICAL MATERIALS AND EQUIPMENT INCLUDES, BUT IS NOT LIMITED TO, BROOMS, DUSTPANS, MOPS, RAGS, GLOVES, GOGGLES, CAT LITTER, SAND, SAWDUST AND PROPERLY LABELED PLASTIC AND METAL WASTE CONTAINERS.
   a. SPILL PREVENTION PRACTICES AND PROCEDURES WILL BE REVIEWED AFTER A SPILL AND ADJUSTED AS NECESSARY TO PREVENT FUTURE SPILLS.
   b. ALL SPILLS WILL BE CLEANED UP IMMEDIATELY UPON DISCOVERY.
   c. ALL SPILLS WILL BE REPORTED AS REQUIRED BY LOCAL, STATE AND FEDERAL REGULATIONS. FOR SPILLS THAT IMPACT SURFACE WATER (LEAVE A SHEEN ON SURFACE WATER), THE NATIONAL RESPONSE CENTER (NRC) WILL BE CONTACTED WITHIN 24 HOURS AT 1-800-424-8802. FOR SPILLS OF AN UNKNOWN AMOUNT, THE NATIONAL CENTER (NRC) WILL BE CONTACTED WITHIN 24 HOURS AT 1-800-424-8802.
   d. FOR SPILLS GREATER THAN 25 GALLONS AND NO SURFACE WATER IMPACTS, THE GEORGIA EPD WILL BE CONTACTED WITHIN 24 HOURS. FOR SPILLS LESS THAN 25 GALLONS AND NO SURFACE WATER IMPACTS, THE SPILL WILL BE CLEANED UP AND LOCAL AGENCIES WILL BE CONTACTED AS REQUIRED.
   e. THE CONTRACTOR SHALL NOTIFY THE PROJECT DESIGN PROFESSIONAL WHO PREPARED THE ES&PC PLAN IF MORE THAN 1,320 GALLONS OF PETROLEUM IS STORED ONSITE (THIS INCLUDES CAPACITIES OF EQUIPMENT) OR IF ANY ONE PIECE OF EQUIPMENT HAS A CAPACITY GREATER THAN 660 GALLONS. THE CONTRACTOR WILL NEED A SPILL PREVENTION CONTAINMENT AND COUNTERMEASURES PLAN PREPARED BY THAT LICENSED PROFESSIONAL.

(35)

AS FINAL GRADE IS ACHIEVED.

2. UPON COMPLETION OF THE PROJECT AND RECEIPT OF THE FINAL INSPECTION APPROVAL THE CONTRACTOR SHALL REMOVE ALL TEMPORARY EROSION CONTROL MEASURES AND DISPOSE OF THEM UNLESS NOTED OTHERWISE ON THE PLANS.

(29) INSPECTIONS (PART IV.D.4.)

a. PERMITTEE REQUIREMENTS.

(1) EACH DAY WHEN ANY TYPE OF CONSTRUCTION ACTIVITY HAS TAKEN PLACE AT A PRIMARY PERMITTEE'S SITE, CERTIFIED PERSONNEL PROVIDED BY THE PRIMARY PERMITTEE SHALL INSPECT: (A) ALL AREAS AT THE PRIMARY PERMITTEE'S SITE WHERE PETROLEUM PRODUCTS ARE STORED, USED, OR HANDLED FOR SPILLS AND LEAKS FROM VEHICLES AND EQUIPMENT AND (B) ALL LOCATIONS AT THE PRIMARY PERMITTEE'S SITE WHERE VEHICLES ENTER OR EXIT THE SITE FOR EVIDENCE OF OFF-SITE SEDIMENT TRACKING. THESE INSPECTIONS MUST BE CONDUCTED UNTIL A NOTICE OF TERMINATION IS SUBMITTED.

(2) MEASURE AND RECORD RAINFALL WITHIN DISTURBED AREAS OF THE SITE THAT HAVE NOT MET FINAL STABILIZATION ONCE EVERY 24 HOURS EXCEPT ANY NON-WORKING SATURDAY, NON-WORKING SUNDAY AND NON-WORKING FEDERAL HOLIDAY. THE DATA COLLECTED FOR THE PURPOSE OF COMPLIANCE WITH THIS PERMIT SHALL BE REPRESENTATIVE OF THE MONITORED ACTIVITY. MEASUREMENT OF RAINFALL MAY BE SUSPENDED IF ALL AREAS OF THE SITE HAVEUNDERGONE FINAL STABILIZATION OR ESTABLISHED A CROP OF ANNUAL VEGETATION AND A SEEDING OF TARGET PERENNIALS APPROPRIATE FOR THE REGION.

(3) CERTIFIED PERSONNEL (PROVIDED BY THE PRIMARY PERMITTEE) SHALL INSPECT THE FOLLOWING AT LEAST ONCE EVERY FOURTEEN (14) CALENDAR DAYS AND WITHIN 24 HOURS OF THE END OF A STORM THAT IS 0.5 INCHES RAINFALL OR GREATER (UNLESS SUCH STORM ENDS AFTER 5:00 PM ON ANY FRIDAY OR ON ANY NON-WORKING SATURDAY, NON-WORKING SUNDAY OR ANY NON-WORKING FEDERAL HOLIDAY IN WHICH CASE THE INSPECTION SHALL BE COMPLETED BY THE END OF THE NEXT BUSINESS DAY AND/OR WORKING DAY, WHICHEVER OCCURS FIRST): (A) DISTURBED AREAS OF THE PRIMARY PERMITTEE'S CONSTRUCTION SITE; (B) AREAS USED BY THE PRIMARY PERMITTEE FOR STORAGE OF MATERIALS THAT ARE EXPOSED TO PRECIPITATION; AND (C) STRUCTURAL CONTROL MEASURES. EROSION AND SEDIMENT CONTROL MEASURES IDENTIFIED IN THE PLAN APPLICABLE TO THE PRIMARY PERMITTEE'S SITE SHALL BE OBSERVED TO ENSURE THAT THEY ARE OPERATING CORRECTLY. WHERE DISCHARGE LOCATIONS OR POINTS ARE ACCESSIBLE, THEY SHALL BE INSPECTED TO ASCERTAIN WHETHER EROSION CONTROL MEASURES ARE EFFECTIVE IN PREVENTING SIGNIFICANT IMPACTS TO RECEIVING WATER(S). FOR AREAS OF A SITE THAT HAVE UNDERGONE FINAL STABILIZATION OR ESTABLISHED A CROP OF ANNUAL VEGETATION AND A SEEDING OF TARGET PERENNIALS APPROPRIATE FOR THE REGION, THE PERMITTEE MUST COMPLY WITH PART IV.D.4.a.(4). THESE INSPECTIONS MUST BE CONDUCTED UNTIL A NOTICE OF TERMINATION IS SUBMITTED.

(4) CERTIFIED PERSONNEL (PROVIDED BY THE PRIMARY PERMITTEE) SHALL INSPECT AT LEAST ONCE PER MONTH DURING THE TERM OF THIS PERMIT (I.E., UNTIL A NOTICE OF TERMINATION IS SUBMITTED TO EPD) THE AREAS OF THE SITE THAT HAVE UNDERGONE FINAL STABILIZATION OR ESTABLISHED A CROP OF ANNUAL VEGETATION AND A SEEDING OF TARGET PERENNIALS APPROPRIATE FOR THE REGION. THESE AREAS SHALL BE INSPECTED FOR EVIDENCE OF, OR THE POTENTIAL FOR, POLLUTANTS ENTERING THE DRAINAGE SYSTEM AND THE RECEIVING WATER(S). EROSION AND SEDIMENT CONTROL MEASURES IDENTIFIED IN THE PLAN SHALL BE OBSERVED TO ENSURE THAT THEY ARE OPERATING CORRECTLY. WHERE DISCHARGE LOCATIONS OR POINTS ARE ACCESSIBLE, THEY SHALL BE INSPECTED TO ASCERTAIN WHETHER EROSION CONTROL MEASURES ARE EFFECTIVE IN PREVENTING SIGNIFICANT IMPACTS TO RECEIVING WATER(S).

(5) BASED ON THE RESULTS OF EACH INSPECTION, THE SITE DESCRIPTION AND THE POLLUTION PREVENTION AND CONTROL MEASURES IDENTIFIED IN THE EROSION, SEDIMENTATION AND POLLUTION CONTROL PLAN, THE PLAN SHALL BE REVISED AS APPROPRIATE NOT LATER THAN SEVEN (7) CALENDAR DAYS FOLLOWING EACH INSPECTION. IMPLEMENTATION OF SUCH CHANGES SHALL BE MADE AS SOON AS PRACTICAL BUT IN NO CASE LATER THAN SEVEN (7) CALENDAR DAYS FOLLOWING EACH INSPECTION.

(6) A REPORT OF EACH INSPECTION THAT INCLUDES THE NAME(S) OF CERTIFIED PERSONNEL MAKING EACH INSPECTION, THE DATE(S) OF EACH INSPECTION, CONSTRUCTION PHASE (I.E., INITIAL, INTERMEDIATE OR FINAL), MAJOR OBSERVATIONS RELATING TO THE IMPLEMENTATION OF THE EROSION, SEDIMENTATION AND POLLUTION CONTROL PLAN, AND ACTIONS TAKEN IN ACCORDANCE WITH PART IV.D.4.a.(5). OF THE PERMIT SHALL BE MADE AND RETAINED AT THE SITE OR BE READILY AVAILABLE AT A DESIGNATED ALTERNATE LOCATION UNTIL THE ENTIRE SITE OR STATE OF GEORGIA PAGE 34 OF 49 DEPARTMENT OF NATURAL RESOURCES PERMIT NO. GAR100002 ENVIRONMENTAL PROTECTION DIVISION THAT PORTION OF A CONSTRUCTION SITE THAT HAS BEEN PHASED HAS UNDERGONE FINAL STABILIZATION AND A NOTICE OF TERMINATION IS SUBMITTED TO EPD. SUCH REPORTS SHALL BE READILY AVAILABLE BY END OF THE SECOND BUSINESS DAY AND/OR WORKING DAY AND SHALL IDENTIFY ALL INCIDENTS OF BEST MANAGEMENT PRACTICES THAT HAVE NOT BEEN PROPERLY INSTALLED AND/OR MAINTAINED AS DESCRIBED IN THE PLAN. WHERE THE REPORT DOES NOT IDENTIFY ANY INCIDENTS, THE INSPECTION REPORT SHALL CONTAIN A STATEMENT THAT THE BEST MANAGEMENT PRACTICES ARE IN COMPLIANCE WITH THE EROSION, SEDIMENTATION AND POLLUTION CONTROL PLAN. THE REPORT SHALL BE SIGNED IN ACCORDANCE WITH PART V.G.2. OF THIS PERMIT.

(29) RETENTION OF RECORDS (PART IV.F.)

(31) 1. THE PRIMARY PERMITTEE SHALL RETAIN THE FOLLOWING RECORDS AT THE CONSTRUCTION SITE OR THE RECORDS SHALL BE READILY AVAILABLE AT A DESIGNATED ALTERNATE LOCATION FROM COMMENCEMENT OF CONSTRUCTION UNTIL SUCH TIME AS A NOT IS SUBMITTED IN ACCORDANCE WITH PART VI:
   a. A COPY OF ALL NOTICES OF INTENT SUBMITTED TO EPD;
   b. A COPY OF THE EROSION, SEDIMENTATION AND POLLUTION CONTROL PLAN REQUIRED BY THIS PERMIT;
   c. THE DESIGN PROFESSIONAL'S REPORT OF THE RESULTS OF THE INSPECTION CONDUCTED IN ACCORDANCE WITH PART IV.a.5. OF THIS PERMIT; STATE OF GEORGIA PAGE 41 OF 49 DEPARTMENT OF NATURAL RESOURCES PERMIT NO. GAR100002 ENVIRONMENTAL PROTECTION DIVISION;
   d. A COPY OF ALL SAMPLING INFORMATION, RESULTS, AND REPORTS REQUIRED BY THIS PERMIT;
   e. A COPY OF ALL INSPECTION REPORTS GENERATED IN ACCORDANCE WITH PART IV.D.4.a. OF THIS PERMIT;
   f. A COPY OF ALL VIOLATION SUMMARIES AND VIOLATION SUMMARY REPORTS GENERATED IN ACCORDANCE WITH PART III.D.2. OF THIS PERMIT; AND
   g. DAILY RAINFALL INFORMATION COLLECTED IN ACCORDANCE WITH PART IV.D.4.a.(2). OF THIS PERMIT.
2. COPIES OF ALL NOTICES OF INTENT, NOTICES OF TERMINATION, INSPECTION REPORTS, SAMPLING REPORTS (INCLUDING ALL CALIBRATION AND MAINTENANCE RECORDS AND ALL ORIGINAL STRIP CHART RECORDINGS FOR CONTINUOUS MONITORING INSTRUMENTATION), OR OTHER REPORTS REQUESTED BY THE EPD, EROSION, SEDIMENTATION AND POLLUTION CONTROL PLANS, RECORDS OF ALL DATA USED TO COMPLETE THE NOTICE OF INTENT TO BE COVERED BY THIS PERMIT AND ALL OTHER RECORDS REQUIRED BY THIS PERMIT SHALL BE RETAINED BY THE PERMITTEE WHO EITHER PRODUCED OR USED IT FOR A PERIOD OF AT LEAST THREE YEARS FROM THE DATE THAT THE NOT IS SUBMITTED IN ACCORDANCE WITH PART VI OF THIS PERMIT. THESE RECORDS MUST BE MAINTAINED AT THE PERMITTEE'S PRIMARY PLACE OF BUSINESS OR AT A DESIGNATED ALTERNATIVE LOCATION ONCE THE CONSTRUCTION ACTIVITY HAS CEASED AT THE PERMITTED SITE. THIS PERIOD MAY BE EXTENDED BY REQUEST OF THE EPD AT ANY TIME UPON WRITTEN NOTIFICATION TO THE PERMITTEE.

(46)

SOIL SURVEY CLASSIFICATION

SERIES TYPE	SYMBOL	DESCRIPTION
ALLEN	AaE	DEEP, WELL DRAINED FINE SANDY LOAM ON 6-10 PERCENT SLOPES WITH A SLIGHT TO MODERATE EROSION HAZARD
CHEWACLA	Ck	DEEP, SOMEWHAT POORLY DRAINED NEARLY LEVEL SILT LOAM ON FLOODPLAINS
CUNNINGHAM	CuB	MODERATELY DEEP, WELL DRAINED LOAM ON 2-6 PERCENT SLOPES WITH A HAZARD OF EROSION IF UNPROTECTED
DOWELLTON	Do	POORLY DRAINED NEARLY LEVEL CLAY LOAM OFTEN SHALLOW WITH LIMESTONE OUTCROPS
ETOWAH		WELL DRAINED NEARLY LEVEL WITH A HAZARD OF EROSION IF UNPROTECTED
	EtB	LOAM SOILS ON 2-6% SLOPES
	EtC	LOAM SOILS ON 6-10% SLOPES
ROANOKE	RoA	POORLY DRAINED NEARLY LEVEL SILT LOAM SUBJECT TO FLOODING
TOWNLEY	TnF	WELL DRAINED SILT LOAM ON 25-45% SLOPES WITH SEVERE EROSION HAZARD
TUPELO	Tv	SOMEWHAT POORLY DRAINED NEARLY LEVEL CLAY LOAM, OFTEN FLOODED
WHITWELL	Wh	MODERATELY WELL DRAINED NEARLY LEVEL SILT LOAM

(28)

ANTICIPATED ACTIVITY SCHEDULE

MONTHS	1	2	3	4	5	6
INSTALL SEDIMENT CONTROLS						
TRAILHEAD CLEAR & GRADING						
CONSTRUCT CATTLE FENCE						
CONSTRUCT BRIDGE NO. 1						
CONSTRUCT BRIDGE NO. 2						
GRADE & CONSTRUCT TRAIL						
PERMANENT GRASSING						
REMOVE SILT FENCE						

(2) AARON W. CARROLL, P.E. 21014 DATE: 10-3-2018
GSWCC LEVEL II CERT.NO. 0000004427

(4) RESPONSIBLE OFFICIAL AND 24 HOUR CONTACT: MR. KIRK MILAM, P.E. (706)252-5084

GEORGIA REGISTERED No. 21014 PROFESSIONAL ENGINEER AARON W. CARROLL

GEORGIA811 www.Georgia811.com
Know what's below. Call before you dig.

(7) REVISIONS

NO.	DESCRIPTION	DATE
1.		
2.		
3.		
4.		
5.		

CITY OF ROME, GEORGIA
ENGINEERING DEPARTMENT

MOUNT BERRY TRAIL
EROSION, SEDIMENT & POLLUTION CONTROL PLAN - GENERAL NOTES

SCALE: AS SHOWN DRAWN BY: WKM
DATE: JULY 2018 (7) FINAL APPROVAL:
JOB NO. 1405 SHEET 20 OF 27

THIS LINE IS ONE INCH LONG PLOTTED FULL SCALE.

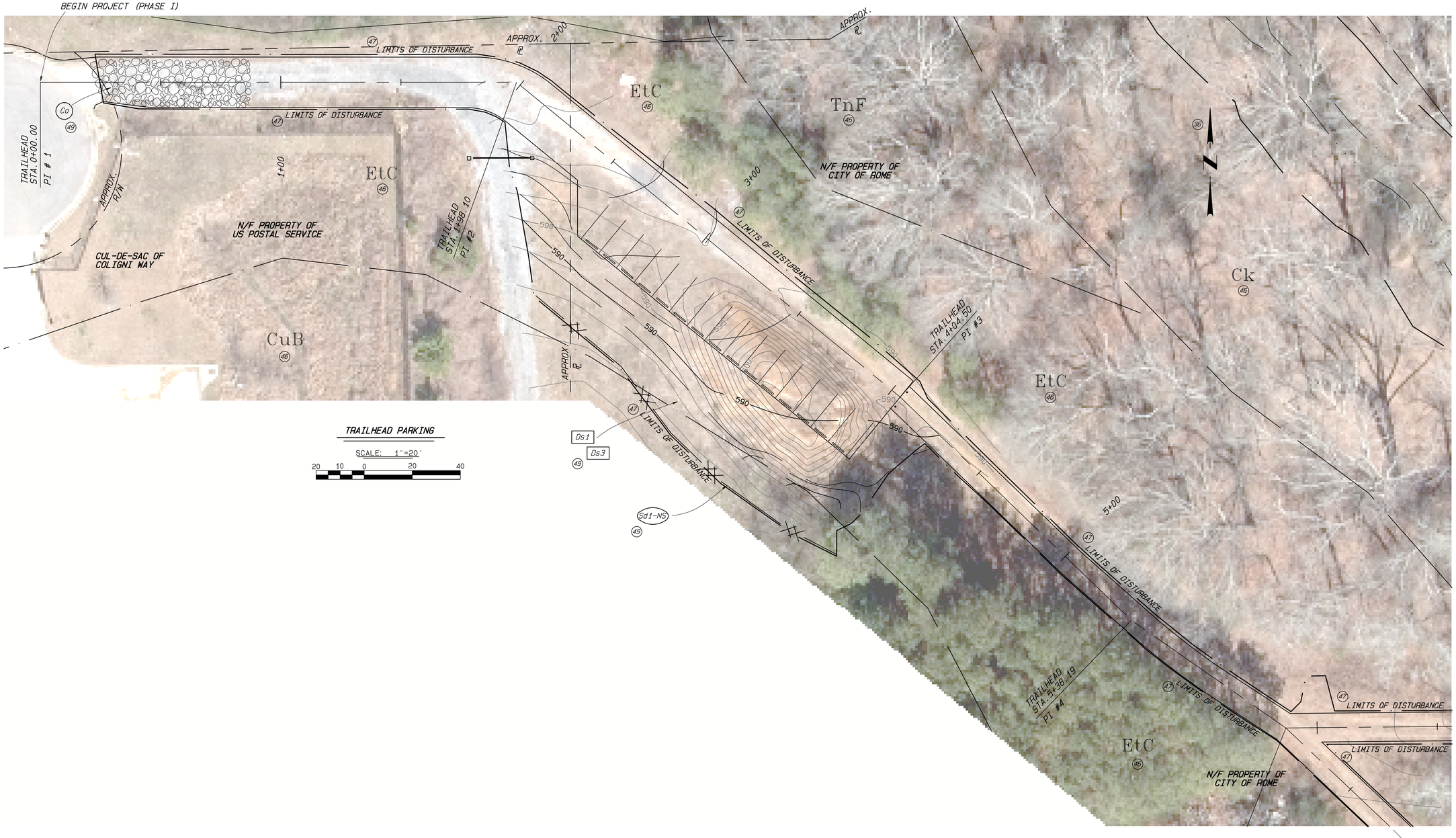

TRAILHEAD PARKING

SCALE: 1"=20'

20 10 0 20 40

LEGEND

—·—·—	SOIL SERIES BOUNDARY
EtC	SOIL SERIES ABBREVIATION
—x—x—	SILT FENCE (SEDIMENT BARRIER)
Sd1 Ds3	BMP CODE
— · · · —	EDGE OF STREAM
—·—·—	LIMITS OF DISTURBANCE

GEORGIA REGISTERED No. 21014 PROFESSIONAL ENGINEER AARON W. CARROLL

(2) AARON W. CARROLL, P.E. 21014 DATE: 10-3-2018
GSWCC LEVEL II CERT.NO. 0000004427

(4) RESPONSIBLE OFFICIAL AND 24 HOUR CONTACT: MR. KIRK MILAM, P.E. (706)252-5084

GEORGIA811 www.Georgia811.com Know what's below. Call before you dig.

(7) REVISIONS

NO.	DESCRIPTION	DATE
1.		
2.		
3.		
4.		
5.		

CITY OF ROME, GEORGIA
ENGINEERING DEPARTMENT

MOUNT BERRY TRAIL
EROSION, SEDIMENT & POLLUTION CONTROL PLAN - BMP LOCATIONS

SCALE: AS SHOWN DRAWN BY: WKM
DATE: JULY 2018 (7) FINAL APPROVAL:

JOB NO. 1405 SHEET 21 OF 27

THIS LINE |——| IS ONE INCH LONG PLOTTED FULL SCALE.

SCALE: 1"=50'

50 25 0 50 100

LEGEND

— · —	SOIL SERIES BOUNDARY
EtC	SOIL SERIES ABBREVIATION
—⋇—⋇—	SILT FENCE (SEDIMENT BARRIER)
Sd1 Ds3	BMP CODE
— · · · —	EDGE OF STREAM
—— · ——	LIMITS OF DISTURBANCE

GEORGIA REGISTERED No. 21014 PROFESSIONAL ENGINEER AARON W. CARROLL

(2) AARON W. CARROLL, P.E. 21014 DATE: 10-3-2018
GSWCC LEVEL II CERT.NO. 0000004427

(4) RESPONSIBLE OFFICIAL AND 24 HOUR CONTACT: MR. KIRK MILAM, P.E. (706)252-5084

THIS LINE ⊢——⊣ IS ONE INCH LONG PLOTTED FULL SCALE.

(7) REVISIONS

NO.	DESCRIPTION	DATE
1.		
2.		
3.		
4.		
5.		

CITY OF ROME, GEORGIA
ENGINEERING DEPARTMENT

MOUNT BERRY TRAIL
EROSION, SEDIMENT & POLLUTION CONTROL PLAN - BMP LOCATIONS

SCALE: AS SHOWN DRAWN BY: WKM
DATE: JULY 2018 (7) FINAL APPROVAL:

JOB NO. 1405 SHEET 22 OF 27

SCALE: 1"=50'

50 25 0 50 100

LEGEND

—·—	SOIL SERIES BOUNDARY
EtC	SOIL SERIES ABBREVIATION
—⋇—⋇—	SILT FENCE (SEDIMENT BARRIER)
(Sd1) [Ds3]	BMP CODE
— · · · —	EDGE OF STREAM
—— · ——	LIMITS OF DISTURBANCE

GEORGIA REGISTERED No. 21014 PROFESSIONAL ENGINEER AARON W. CARROLL

(2) AARON W. CARROLL, P.E. 21014 DATE: 10-3-2018
GSWCC LEVEL II CERT.NO. 0000004427

(4) RESPONSIBLE OFFICIAL AND 24 HOUR CONTACT: MR. KIRK MILAM, P.E. (706)252-5084

THIS LINE ├──┤ IS ONE INCH LONG PLOTTED FULL SCALE.

(7) REVISIONS

NO.	DESCRIPTION	DATE
1.		
2.		
3.		
4.		
5.		

CITY OF ROME, GEORGIA
ENGINEERING DEPARTMENT

MOUNT BERRY TRAIL
EROSION, SEDIMENT & POLLUTION CONTROL PLAN - BMP LOCATIONS

SCALE: AS SHOWN DRAWN BY: WKM
DATE: JULY 2018 (7) FINAL APPROVAL:

JOB NO. 1405 SHEET 23 OF 27

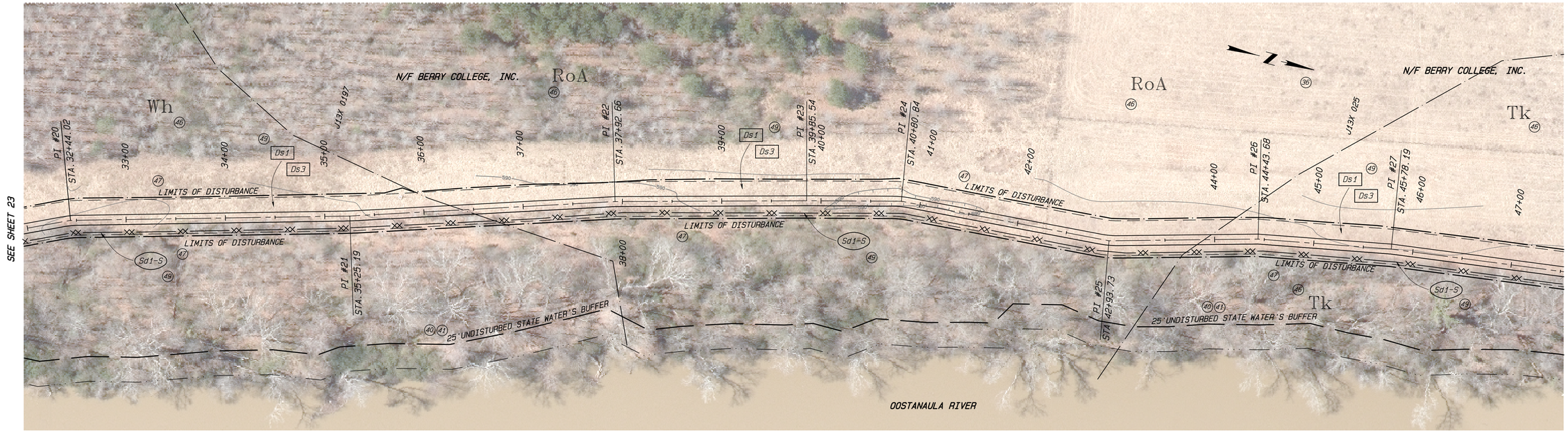

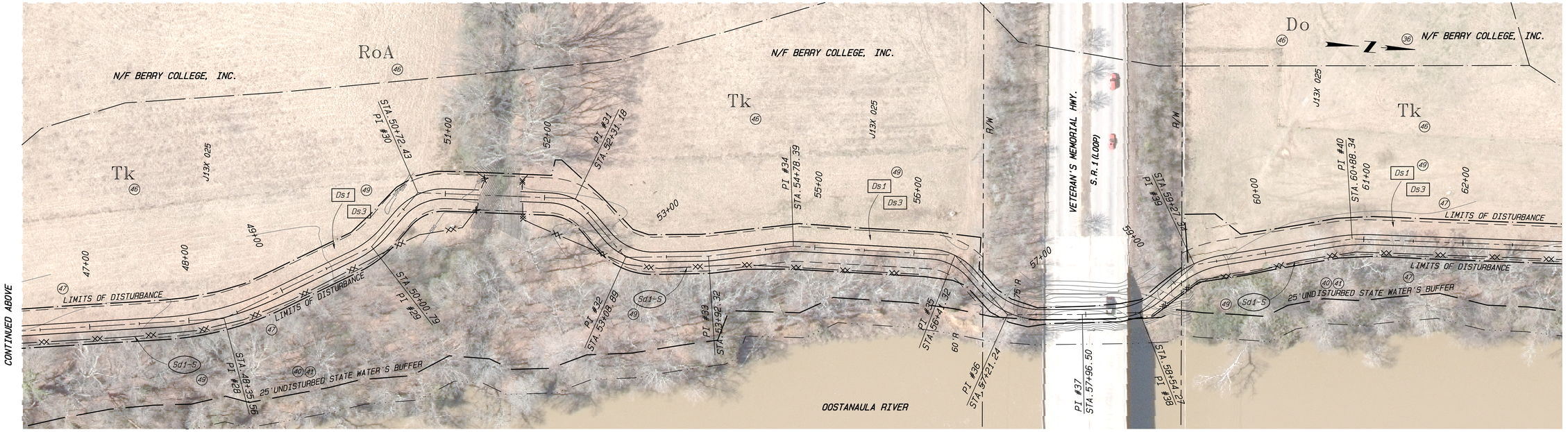

SCALE: 1"=50'

50 25 0 50 100

LEGEND

— · —	SOIL SERIES BOUNDARY
EtC	SOIL SERIES ABBREVIATION
—><—><—	SILT FENCE (SEDIMENT BARRIER)
Sd1 Ds3	BMP CODE
— · · · —	EDGE OF STREAM
——— · ———	LIMITS OF DISTURBANCE

GEORGIA REGISTERED No. 21014 PROFESSIONAL ENGINEER AARON W. CARROLL

(2) AARON W. CARROLL, P.E. 21014 DATE: 10-3-2018
GSWCC LEVEL II CERT.NO. 0000004427

(4) RESPONSIBLE OFFICIAL AND 24 HOUR CONTACT: MR. KIRK MILAM, P.E. (706) 252-5084

(7) REVISIONS

NO.	DESCRIPTION	DATE
1.		
2.		
3.		
4.		
5.		

CITY OF ROME, GEORGIA
ENGINEERING DEPARTMENT

MOUNT BERRY TRAIL
EROSION, SEDIMENT & POLLUTION CONTROL PLAN - BMP LOCATIONS

SCALE: AS SHOWN DRAWN BY: WKM
DATE: JULY 2018 (7) FINAL APPROVAL:
JOB NO. 1405 SHEET 24 OF 27

THIS LINE |——| IS ONE INCH LONG PLOTTED FULL SCALE.

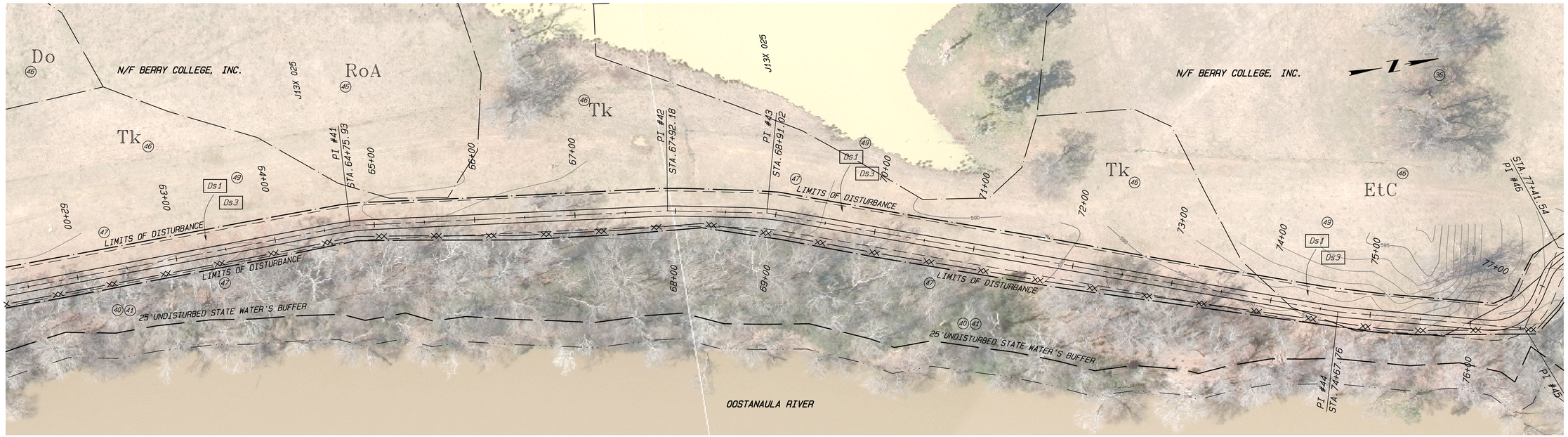

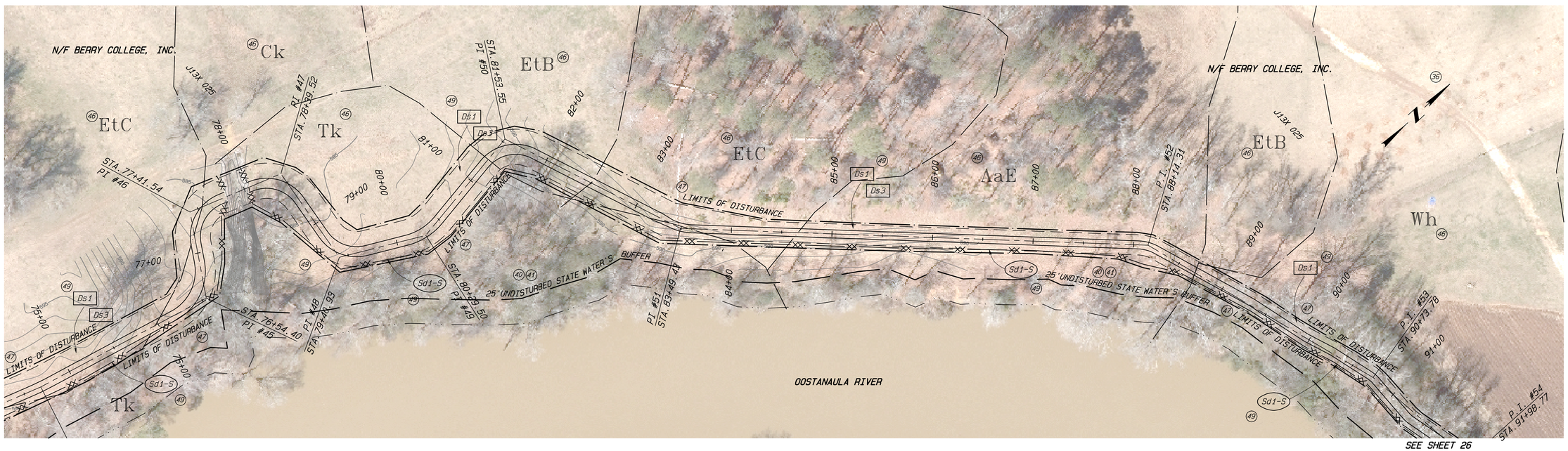

SCALE: 1"=50'

50 25 0 50 100

LEGEND

- SOIL SERIES BOUNDARY
- EtC — SOIL SERIES ABBREVIATION
- SILT FENCE (SEDIMENT BARRIER)
- Sd1 Ds3 — BMP CODE
- EDGE OF STREAM
- LIMITS OF DISTURBANCE

GEORGIA REGISTERED No. 21014 PROFESSIONAL ENGINEER AARON W. CARROLL

(2) AARON W. CARROLL, P.E. 21014 DATE: 10-3-2018
GSWCC LEVEL II CERT. NO. 0000004427

(4) RESPONSIBLE OFFICIAL AND 24 HOUR CONTACT: MR. KIRK MILAM, P.E. (706) 252-5084

(7) REVISIONS

NO.	DESCRIPTION	DATE
1.		
2.		
3.		
4.		
5.		

CITY OF ROME, GEORGIA
ENGINEERING DEPARTMENT

MOUNT BERRY TRAIL
EROSION, SEDIMENT & POLLUTION CONTROL PLAN - BMP LOCATIONS

SCALE: AS SHOWN | DRAWN BY: WKM
DATE: JULY 2018 (7) | FINAL APPROVAL:
JOB NO. 1405 | SHEET 25 OF 27

THIS LINE IS ONE INCH LONG PLOTTED FULL SCALE.

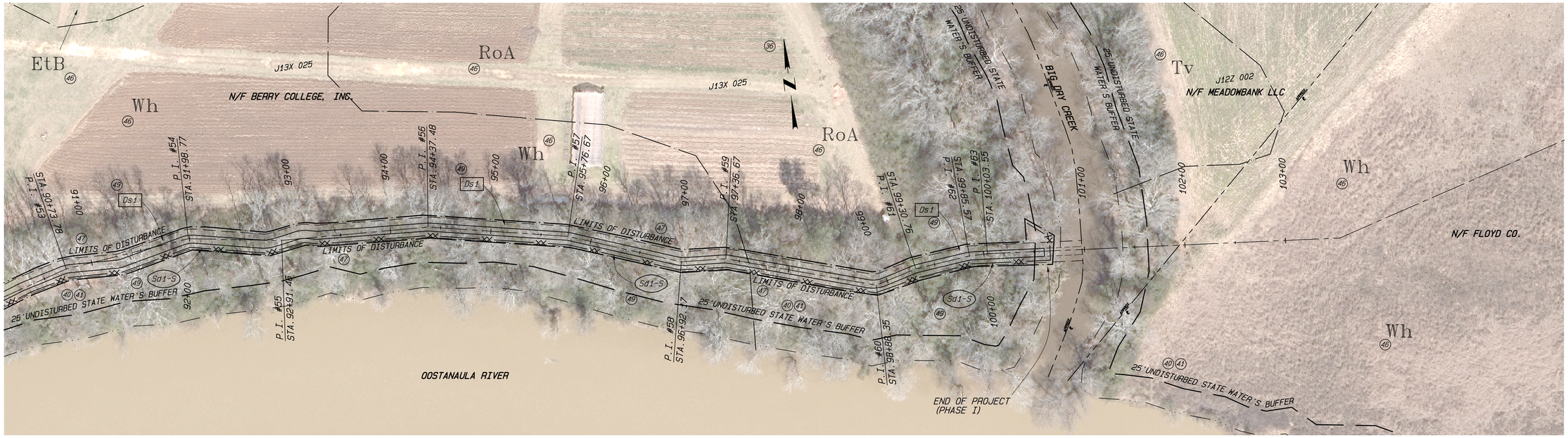

LEGEND

—— · ——	SOIL SERIES BOUNDARY
EtC	SOIL SERIES ABBREVIATION
—⋇—⋇—	SILT FENCE (SEDIMENT BARRIER)
(Sd1) [Ds3]	BMP CODE
—— · · · ——	EDGE OF STREAM
——— · ——	LIMITS OF DISTURBANCE

SCALE: 1"=50'

50 25 0 50 100

(2) AARON W. CARROLL, P.E. 21014 DATE: 10-3-2018
GSWCC LEVEL II CERT.NO. 0000004427

(4) RESPONSIBLE OFFICIAL AND 24 HOUR CONTACT: MR. KIRK MILAM, P.E. (706)252-5084

THIS LINE ├──┤ IS ONE INCH LONG PLOTTED FULL SCALE.

GEORGIA REGISTERED No. 21014 PROFESSIONAL ENGINEER AARON W. CARROLL

(7) REVISIONS

NO.	DESCRIPTION	DATE
1.		
2.		
3.		
4.		
5.		

CITY OF ROME, GEORGIA
ENGINEERING DEPARTMENT

MOUNT BERRY TRAIL
EROSION, SEDIMENT & POLLUTION CONTROL PLAN - BMP LOCATIONS

SCALE: AS SHOWN
DRAWN BY: WKM
DATE: JULY 2018 (7)
FINAL APPROVAL:

JOB NO. 1405

SHEET 26 OF 27

GEORGIA
UNIFORM CODING SYSTEM
FOR SOIL EROSION AND SEDIMENTATION CONTROL PRACTICES
GEORGIA SOIL AND WATER CONSERVATION COMMISSION

STRUCTURAL PRACTICES

CODE	PRACTICE	DETAIL	MAP SYMBOL	DESCRIPTION
Cd	CHECKDAM			A small temporary barrier or dam constructed across a swale, drainage ditch or area of concentrated flow.
Ch	CHANNEL STABILIZATION			Improving, constructing or stabilizing an open channel, existing stream, or ditch.
Co	CONSTRUCTION EXIT			A crushed stone pad located at the construction site exit to provide a place for removing mud from tires thereby protecting public streets.
Cr	CONSTRUCTION ROAD STABILIZATION			A travelway constructed as part of a construction plan including access roads, subdivision roads, parking areas and other on-site vehicle transportation routes.
Dc	STREAM DIVERSION CHANNEL			A temporary channel constructed to convey flow around a construction site while a permanent structure is being constructed.
Di	DIVERSION			An earth channel or dike located above, below, or across a slope to divert runoff. This may be a temporary or permanent structure.
Dn1	TEMPORARY DOWNDRAIN STRUCTURE			A flexible conduit of heavy-duty fabric or other material designed to safely conduct surface runoff down a slope. This is temporary and inexpensive.
Dn2	PERMANENT DOWNDRAIN STRUCTURE			A paved chute, pipe, sectional conduit or similar material designed to safely conduct surface runoff down a slope.
Fr	FILTER RING			A temporary stone barrier constructed at storm drain inlets and pond outlets.
Ga	GABION			Rock filter baskets which are hand-placed into position forming soil stabilizing structures.
Gr	GRADE STABILIZATION STRUCTURE			Permanent structures installed to protect channels or waterways where otherwise the slope would be sufficient for the running water to form gullies.
Lv	LEVEL SPREADER			A storm flow outlet device constructed at zero grade across the slope whereby concentrated runoff may be discharged at a non-erosive velocity onto undisturbed areas stabilized by existing vegetation.
Rd	ROCK FILTER DAM			A temporary stone filter dam installed across drainageways or in conjunction with a temporary sediment trap.
Re	RETAINING WALL			A wall installed to stabilize cut and fill slopes where maximum permissible slopes are not obtainable. Each situation will require special design.
Rt	RETRO FITTING			A device or structure placed in front of a permanent stormwater detention pond outlet structure to serve as a temporary sediment filter.
Sd1	SEDIMENT BARRIER			A barrier to prevent sediment from leaving the construction site. It may be sandbags, bales of straw or hay, brush, logs and poles, or a silt fence
Sd2	INLET SEDIMENT TRAP			A temporary protective device formed at or around an inlet to a storm drain to trap sediment.
Sd3	TEMPORARY SEDIMENT BASIN			A basin created by excavation or a dam across a waterway. The surface water runoff is temporarily stored allowing the bulk of the sediment to drop out.
Sd4	TEMPORARY SEDIMENT TRAP			A small temporary pond that drains a disturbed area so that sediment can settle out. The principle feature distinguishing a temporary sediment trap from a temporary sediment basin is the lack of a pipe or riser.
Sk	FLOATING SURFACE SKIMMER			A buoyant device that releases/drains water from the surface of sediment ponds, traps, or basins at a controlled rate of flow.
SpB	SEEP BERM			A linear control device constructed as a diversion perpendicular to the direction of the runoff to enhance dissipation and infiltration of runoff, while creating multiple sedimentation chambers with the employment of intermediate dikes.

STRUCTURAL PRACTICES

CODE	PRACTICE	DETAIL	MAP SYMBOL	DESCRIPTION
Sr	TEMPORARY STREAM CROSSING			A temporary bridge or culvert-type structure protecting a stream or watercourse from damage by crossing construction equipment.
St	STORMDRAIN OUTLET PROTECTION			A paved or short section of riprap channel at the outlet of a storm drain system preventing erosion from the concentrated runoff.
Su	SURFACE ROUGHENING			A rough soil surface with horizontal depressions on a contour or slopes left in a roughened condition after grading.
Tc	TURBIDITY CURTAIN			A floating or staked barrier installed within the water (it may also be referred to as a floating boom, silt barrier, or silt curtain).
Tp	TOPSOILING			The practice of stripping off the more fertile soil, storing it, then spreading it over the disturbed area after completion of construction activities.
Tr	TREE PROTECTION			To protect desirable trees from injury during construction activity.
Wt	VEGETATED WATERWAY OR STORMWATER CONVEYANCE CHANNEL			Paved or vegetative water outlets for diversions, terraces, berms, dikes or similar structures.

VEGETATIVE PRACTICES

CODE	PRACTICE	DETAIL	MAP SYMBOL	DESCRIPTION
Bf	BUFFER ZONE			Strip of undisturbed original vegetation, enhanced or restored existing vegetation or the reestablishment of vegetation surrounding an area of disturbance or bordering streams.
Cs	COASTAL DUNE STABILIZATION (WITH VEGETATION)		Cs	Planting vegetation on dunes that are denuded, artificially constructed, or re-nourished.
Ds1	DISTURBED AREA STABILIZATION (WITH MULCHING ONLY)		Ds1	Establishing temporary protection for disturbed areas where seedlings may not have a suitable growing season to produce an erosion retarding cover.
Ds2	DISTURBED AREA STABILIZATION (WITH TEMP SEEDING)		Ds2	Establishing a temporary vegetative cover with fast growing seedings on disturbed areas.
Ds3	DISTURBED AREA STABILIZATION (WITH PERM SEEDING)		Ds3	Establishing a permanent vegetative cover such as trees, shrubs, vines, grasses, or legumes on disturbed areas.
Ds4	DISTURBED AREA STABILIZATION (SODDING)		Ds4	A permanent vegetative cover using sods on highly erodable or critically eroded lands.
Du	DUST CONTROL ON DISTURBED AREAS		Du	Controlling surface and air movement of dust on construction site, roadways and similar sites.
Fl-Co	FLOCCULANTS AND COAGULANTS		Fl-Co	Substance formulated to assist in the solids/liquid separation of suspended particles in solution.
Sb	STREAMBANK STABILIZATION (USING PERM VEGETATION)		Sb	The use of readily available native plant materials to maintain and enhance streambanks, or to prevent, or restore and repair small streambank erosion problems.
Ss	SLOPE STABILIZATION		Ss	A protective covering used to prevent erosion and establish temporary or permanent vegetation on steep slopes, shore lines, or channels.
Tac	TACKIFIERS AND BINDERS		Tac	Substance used to anchor straw or hay mulch by causing the organic material to bind together.

(35) Ds1 MULCHING

MATERIAL	QUANITY
DRY STRAW OR HAY	2" – 4" DEPTH
WOOD WASTE (SAWDUST, BARK, CHIPS)	2" – 4" DEPTH
CUTBACK ASPHALT (SLOW CURING)	1,200 GAL. PER ACRE (1/4 GAL. PER SQ. YD.)
POLYETHYLENE FILM	COMPLETELY COVERING EXPOSED AREA TRENCHED IN AT OUTER EDGES.

STRAW OR HAY MULCH SHALL BE ANCHORED IMMEDIATELY AFTER APPLICATION. MULCH MAY BE ANCHORED BY MECHANICALLY PRESSING INTO SURFACE. IF SPREAD WITH BLOWER EQUIPMENT, MULCH SHALL BE ANCHORED WITH EMULSIFIED ASPHALT (GRADE AE-5 PR SS-1) – 100 GALLONS WATER PER TON OF MULCH. NETTING SHALL BE USED TO ANCHOR WOOD WASTE AND CHIPS. POLYETHYLENE SHALL BE TRENCHED IN AT EDGES.

(35) Ds3 Ds4 SEEDS OR PLANTS FOR EROSION CONTROL (PERMANENT)

SPECIES	RATES/SPACING 1000 FT.	RATES/SPACING ACRES	PLANTING DATES MTS. L'STOME	PLANTING DATES PIEDMONT	PLANTING DATES COASTAL	YEARS TO APPLY FERTILIZER	N	P_2O_5	K_2O	N TOP DRESSING
WEEPING LOVEGRASS AND VIRGATA OR SERICEA LESPEDEZA	0.2 LB. / 1.2 LB.	4-6 LB. / 40-60 LB.	4/10-6/15	4/1-6/15	2/15-6/15	FIRST	60-90	120-180	120-180	50
						SECOND	0	70-100	70-100	–
SERICEA LESPEDEZA SEEDBEARING HAY WITH	140 LB.	3 TONS	10/1-3/15	10/1-3/1	10/15-2/1	IN SPRING AFTER MULCH	60-90	120-180	120-180	50
OVERSEEDED WEEPING LOVEGRASS	0.2 LB.	4-6 LB.	3/15-5/1	3/1-4/15	2/15-4/1	2ND SPRING	0	70-100	70-100	–
UNHULLED COMMON BERMUDAGRASS AND VIRGATA OR SERICEA LESPEDEZA SEED HAY	0.25 LB. / 140 LB.	8-10 LB. / 3 TONS	10/1-3/15	10/1-3/1	10/15-2/1	FIRST	60-90	120-180	120-180	50
						SECOND	0	70-100	70-100	–
PENSACOLA BAHIAGRASS (BETTER SITES OF LOWER PIEDMONT)	1.2 LB.	40-60 LB.	–	4/1-6/15	10/1-6/15	FIRST	60-90	120-180	120-180	50-100
						SECOND	48	96	96	50-100
WILMINGTON BAHIAGRASS (BETTER SITES OF UPPER PIEDMONT)	1.2 LB.	40-60 LB.	4/10-6/15	4/1-6/15	–	FIRST	60-90	120-180	120-180	50-100
						SECOND	48	96	96	50-100
TALL FESCUEGRASS (USE ON BETTER SITES)	1 LB.	30-50 LB.	8/1-10/15	9/1-11/1	9/15-11/15	FIRST	60-90	120-180	120-180	IN SPRING 50-100
						SECOND	60	120	120	–
COASTAL OR COMMON BERMUDAGRASS	1 CU.FT.	25-40 CU.FT.	–	3/1-8/15	1/1-12/31	FIRST	60-90	120-180	120-180	50-100
SPRIGS OR SOD PLUGS	3' X 3'	3' X 3'				SECOND	48	96	96	50-100

NOTE:
LIME TO BE APPLIED AT A RATE OF ONE TO TWO TONS PER ACRE.

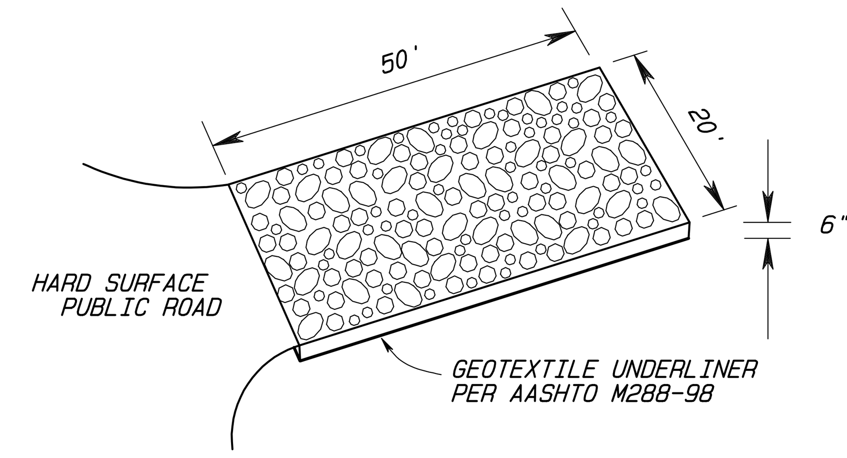

50' x 20' x 6" WITH 2"ø STONE
CONTRACTOR TO INSTALL INITALLY
AND MAINTAIN DURING CONSTRUCTION.

(35) Co TEMPORARY CONSTRUCTION EXIT DETAIL
N.T.S.

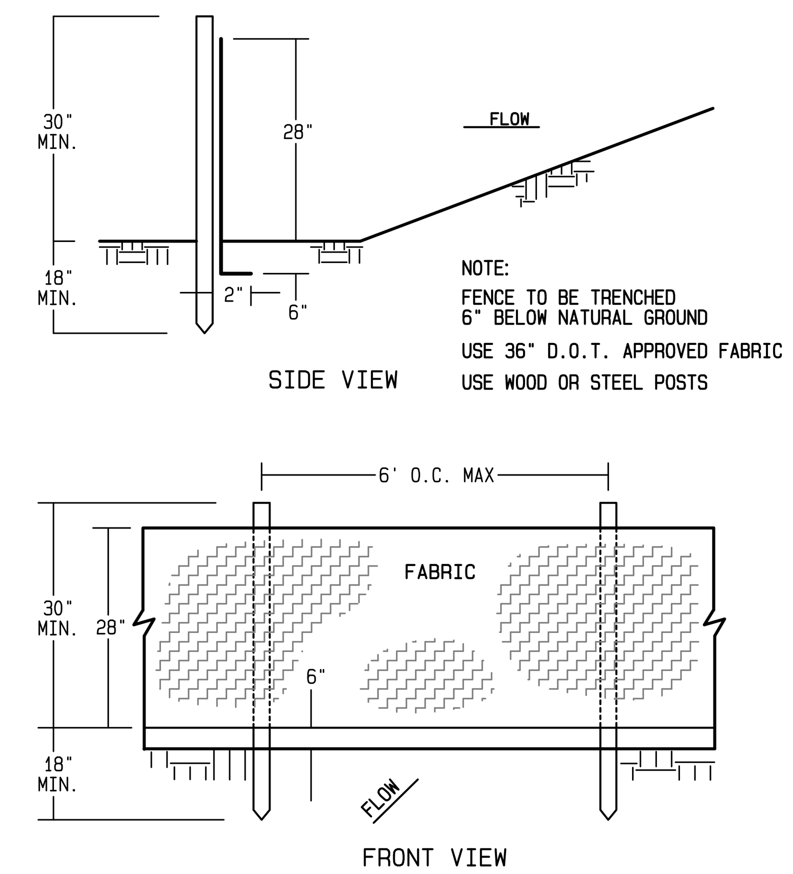

TYPE 'A' SILT FENCE

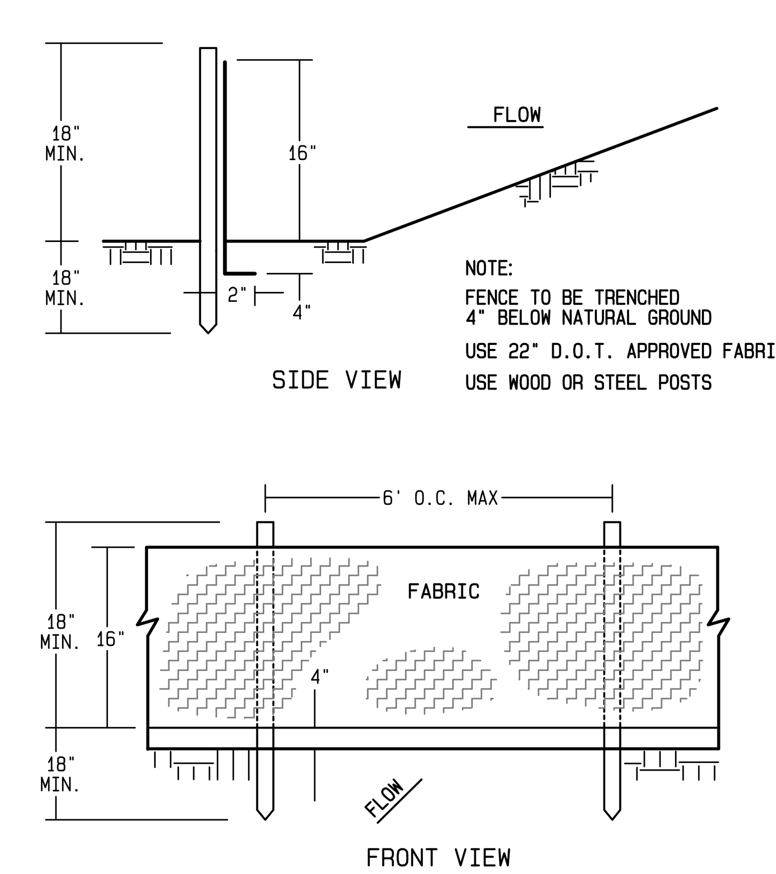

TYPE 'B' SILT FENCE

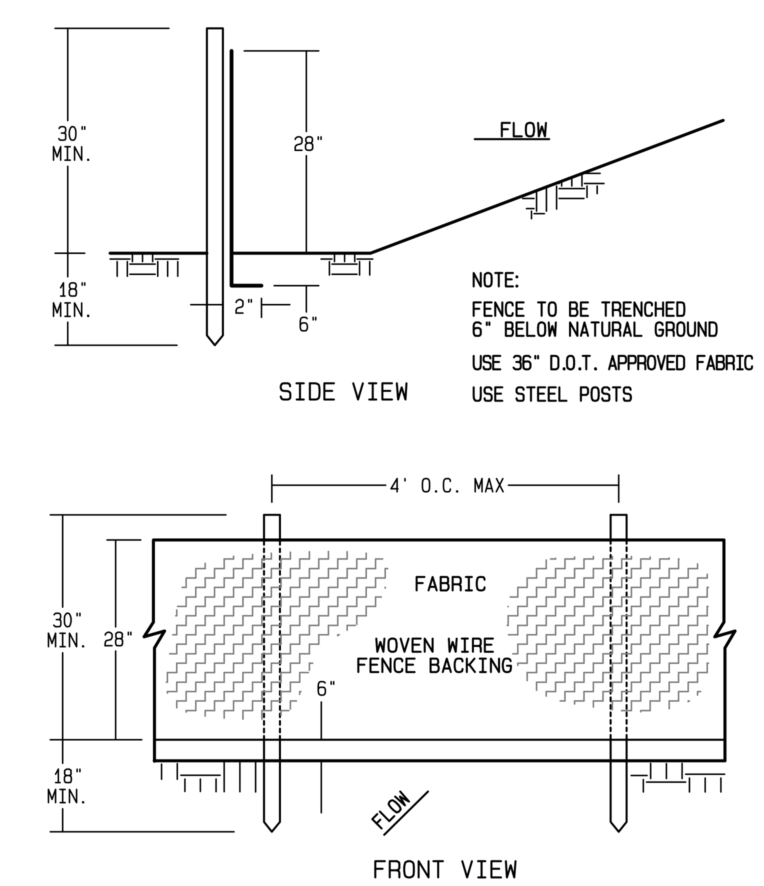

TYPE 'C' SILT FENCE

Sd1 SILT FENCE DETAIL
N.T.S.

(35) Sd1-S — *SENSITIVE AREA APPLICATION REQUIRES TYPE 'C' SILT FENCE IN TWO ROWS SPACED MIN. 3' APART.*

Sd1-NS — *NON-SENSITIVE AREA APPLICATION USING TYPE 'A' OR TYPE 'B' SILT FENCE IN A SINGLE ROW.*

(2) *AARON W. CARROLL, P.E. 21014* *DATE:* 10-3-2018
GSWCC LEVEL II CERT.NO. 0000004427

(4) *RESPONSIBLE OFFICIAL AND 24 HOUR CONTACT:* *MR. KIRK MILAM, P.E.* *(706) 252-5084*

GEORGIA REGISTERED No. 21014 PROFESSIONAL ENGINEER AARON W. CARROLL

NO.	DESCRIPTION	DATE
1.		
2.		
3.		
4.		
5.		

(7) REVISIONS

CITY OF ROME, GEORGIA
ENGINEERING DEPARTMENT

MOUNT BERRY TRAIL
EROSION, SEDIMENT & POLLUTION CONTROL PLAN – BMP DETAILS

SCALE: AS SHOWN **DRAWN BY:** WKM
DATE: JULY 2018 (7) **FINAL APPROVAL:**
JOB NO. 1405 **SHEET** 27 **OF** 27

THIS LINE |———| *IS ONE INCH LONG PLOTTED FULL SCALE.*